INOVANCE



MD290 AC Drive

High Performance V/F Control

User Guide

B02
Data code 19010321

www.Farazcontrol.com

واحد فروش: ۰۹۱۲۹۲۷۵۱۵۹ (مهندس رمضان زاده)

Please Read This Important Information

Inovance Technology designs and manufactures the MD290 Series of AC Drives for the industrial automation market and is committed to a policy of continuous product development and improvement.

The product is supplied with the latest version software and the contents of this manual are correct at the time of printing. If there is any doubt with regards to the software version or the manual contents, please contact Inovance Technology or the Authorised Distributor.

Inovance Technology accepts no liability for any consequences resulting from negligent or incorrect installation or parameter adjustment of the AC Drive, including mismatching of the AC Drive with the motor.

The AC Drive is intended as an industrial automation component for professional incorporation into a complete machine or process system. It is the responsibility of the user or machine builder or installation contractor or electrical designer/engineer to take all necessary precautions to ensure that the system complies with current standards, and to provide any devices (including safety components), required to ensure the overall safety of the equipment and personnel. The AC Drive, under no circumstances, be considered as a safety device. If in doubt, please contact Inovance Technology or the Authorised Distributor.

Please read this manual before starting work on the AC Drive. Only qualified personnel with relevant training and experience should be allowed to work on the AC Drive as high voltages (including DC voltage) exists within the AC Drive, even after power OFF. Strict adherence to this instruction is required to ensure a high level of safety. If in doubt, please consult with Inovance Technology or the Authorised Distributor.

www.Farazcontrol.com واحد فروش: ۰۹۱۲۹۲۷۵۱۵۹ (مهندس رمضان زاده)

Please Read This Important Information 1
Safety Information and Precautions 4
Chapter 1 Product Information 8
1.1 Product Type Identification 8
1.2 Internal View of MD290 9
1.3 Ratings 13
1.4 Technical Specifications 16
1.5 De-rating 20
Chapter 2 Mechanical Installation 22
2.1 Installation Environment 22
2.2 Mounting Orientation and Clearance 23
2.3 Mounting Dimensions 25
2.4 Installation Method and Procedures 28
2.5 Remove and Refit the Front Cover 44
Chapter 3 Electrical Installation 48
3.1 Typical System Connection 48
3.2 Main Circuit Wiring 49
3.3 Control Circuit Wiring 68
3.4 Wiring Checklist 77
Chapter 4 Operating Panel (Keypad & Display) 80
4.1 Introduction 80
4.2 Inbuilt LED Operating Panel 80
Chapter 5 Quick Setup 92
5.1 Get Familiar With Operating Panel 92
5.2 Setup Flowchart 93
Chapter 6 Description of Parameters 102
6.1 Start/Stop Command Source 102
6.2 Set Frequency Reference 110
6.3 Start/Stop the AC Drive 136
6.4 Motor Auto-tuning 143
6.5 Control Performance 146
6.6 Protections 153
6.7 Monitoring 160
6.8 Process Control 166
6.9 Control Circuit Terminals 178
6.10 Communication 192
6.11 Auxiliary Function 200

www.Farazcontrol.com واحد فروش: ۰۹۱۲۹۲۷۵۱۵۹ (مهندس رمضان زاده)

Chapter 7 Interfaces and Communication 210
7.1 About Use of MD290 Terminals 210
7.2 Serial Communication 212
7.3 About Multi-functional Extension Interfaces 213
7.4 Definition of Communication Data Address 214
7.5 Modbus Communication Protocol 217
Chapter 8 Peripherals and Options 228
8.1 MCCB, Fuse and Contactor 231
8.2 Braking Unit and Braking Resistor 232
8.3 External Operating Panel 238
8.4 Extension Cards 239
8.5 Through-hole Mounting Bracket 257
Chapter 9 Maintenance and Inspection 262
9.1 Daily Inspection 262
9.2 Periodic Inspection 264
9.3 Lifetime of Fans and Electrolytic DC Bus Capacitors 266
9.4 Storage 270
9.5 Warranty Agreement 270
Chapter 10 Troubleshooting 272
10.1 Safety Information 272
10.2 Troubleshooting During Trial Run 273
10.3 Fault Display 273
10.4 Resetting Fault 274
10.5 Faults and Diagnostics 275
10.6 Symptoms and Diagnostics 282
Appendix A Standards Compliance 286
A.1 CE 286
A.2 UL Certification 305
Appendix B Parameter Table 306
B.1 Introduction 306
B.2 Standard Parameters 307
B.3 Monitoring Function Codes 342
Revison History 347

www.Farazcontrol.com واحد فروش: ۰۹۱۲۹۲۷۵۱۵۹ (مهندس رمضان زاده)

Safety Information and Precautions

i

Warnings, Cautions and Notes

WARNING

A Warning contains information, which is essential for avoiding a safety hazard.

CAUTION

A Caution contains information, which is necessary for avoiding a risk of damage to the product or other machine.

Note

A Note contains information which helps to ensure correct operation.

Electrical Safety

Extreme care must be taken at all times when working with the AC Drive or within the area of the AC Drive. The voltages used in the AC Drive can cause severe electrical shock or burns and is potentially lethal. Only authorized and qualified personnel should be allowed to work on AC Drives.

Machine/System Design and Safety of Personnel

Machine/system design, installation, commissioning startups and maintenance must be carried out by personnel who have the necessary training and experience. They must read this safety information and the contents of this manual. If incorrectly installed, the AC Drive may present a safety hazard.

The AC Drive uses high voltages and currents (including DC), carries a high level of stored electrical energy in the DC bus capacitors even after power OFF. These high voltages are potentially lethal.

The AC Drive is NOT intended to be used for safety related applications/functions. The electronic “STOP & START” control circuits within the AC Drive must not be relied upon for the safety of personnel. Such control circuits do not isolate mains power voltages from the output of the AC Drive. The mains power supply must be disconnected by an electrical safety isolation device before accessing the internal parts of the AC Drive.

Safety risk assessments of the machine or process system which uses an AC Drive must be undertaken by the user and or by their systems integrator/designer. In particular the safety assessment/design must take into consideration the consequences of the AC Drive failing or tripping out during normal operation and whether this leads to a safe stop position without damaging machine, adjacent equipment and machine operators/users. This responsibility lies with the user or their machine/process system integrator.

System integrator/designer must ensure the complete system is safe and designed according to the relevant safety standards. Inovance Technology and Authorized Distributors can provide recommendations related to the AC drive to ensure long term safe operation.

The installer of the AC Drive is responsible for complying with all relevant regulations for wiring, circuit fuse protection, earthing, accident prevention and electromagnetic (EMC regulations). In particular fault discrimination for preventing fire risk and solid earthing practices must be adhered to for electrical safety (also for good EMC performance). Within the European Union, all machinery in which this product is used must comply with required directives.

www.Farazcontrol.com واحد فروش: ۰۹۱۲۹۲۷۵۱۵۹ (مهندس رمضان زاده)

Electrical Installation - Safety

Electrical shock risk is always present within an AC Drive including the output cable leading to the motor terminals. Where dynamic brake resistors are fitted external to the AC Drive, care must be taken with regards to live contact with the brake resistors, terminals which are at high DC voltage and potentially lethal. Cables from the AC Drive to the dynamic brake resistors should be double insulated as DC voltages are typically 600 to 700 VDC.

Mains power supply isolation switch should be fitted to the AC Drive. The mains power supply must be disconnected via the isolation switch before any cover of the AC Drive can be removed or before any servicing work is undertaken stored charge in the DC bus capacitors of the PWM AC Drive is potentially lethal after the AC supply has been disconnected. The AC supply must be isolated at least 10 minutes before any work can be undertaken as the stored charge will have been discharged through the internal bleed resistor fitted across the DC bus capacitors.

Whenever possible, it is good practice to check DC bus voltage with a VDC meter before accessing the AC Drive bridge. Where the AC Drive input is connected to the mains supply with a plug and socket, then upon disconnecting the plug and socket, be aware that the plug pins may be exposed and internally connected to DC bus capacitors (via the internal bridge rectifier in reversed bias). Wait 10 minutes to allow stored charge in the DC bus capacitors to be dissipated by the bleed resistors before commencing work on the AC Drive.

Electrical Shock Hazard

Ensure the protective earthing conductor complies with technical standards and local safety regulations. Because the leakage current exceeds 3.5 mA in all models, IEC 61800-5-1 states that either the power supply must be automatically disconnected in case of discontinuity of the protective earthing conductor or a protective earthing conductor with a cross-section of at least 10 mm^2 (Cu) or 16 mm^2 (Al) must be used. Failure to comply may result in death or serious injury.

When using an earth leakage circuit breaker, use a residual current operated protective device (RCD) of type B (breaker which can detect both AC and DC). Leakage current can cause unprotected components to operate incorrectly. If this is a problem, lower the carrier frequency, replace the components in question with parts protected against harmonic current, or increase the sensitivity amperage of the leakage breaker to at least 200 mA per drive.

Factors in determining leakage current:

- Size of the AC drive
- AC drive carrier frequency
- Motor cable type and length
- EMI/RFI filter

www.Farazcontrol.com واحد فروش: ۰۹۱۲۹۲۷۵۱۵۹ (مهندس رمضان زاده)

Approvals

The following table lists the certificates and standards that the product may comply with. For details about the acquired certificates, see the certification marks on the product nameplate.

Certification	Directives		Standard
CE	EMC directives	2014/30/EU	EN 61800-3
	LVD directives	2014/35/EU	EN 61800-5-1
	RoHS directives	2011/65/EU	EN 50581
TUV	-		EN 61800-5-1
UL	-		UL508C/UL61800-5-1
			C22.2 No.14-13

Note	• The above EMC directives are complied with only when the EMC electric installation requirements are strictly observed. • Machines and devices used in combination with this drive must also be CE certified and marked. The integrator who integrates the drive with the CE mark into other devices has the responsibility of ensuring compliance with CE standards and verifying that conditions meet European standards. • The installer of the drive is responsible for complying with all relevant regulations for wiring, circuit fuse protection, earthing, accident prevention and electromagnetic (EMC regulations). In particular fault discrimination for preventing fire risk and solid earthing practices must be adhered to for electrical safety (also for good EMC practice). • For more information on certification, consult our distributor or sales representative.

Motor Thermal Protection

Motor thermal protection is not assessed by UL.

www.Farazcontrol.com واحد فروش: ۰۹۱۲۹۲۷۵۱۵۹ (مهندس رمضان زاده)

1. Product Information

1.1 Product Type Identification 8
1.2 Internal View of MD290 9
1.3 Ratings 13
1.4 Technical Specifications 16
1.5 De-rating 20

www.Farazcontrol.com واحد فروش: ۰۹۱۲۹۲۷۵۱۵۹ (مهندس رمضان زاده)

Chapter 1 Product Information

Safety Information

CAUTION

- Do not lift/carry the drive by carrying the front cover. Failure to comply may result in personal injury.
- Follow proper electrostatic discharge (ESD) procedures when operating the drive. Failure to comply will risk damaging the internal circuit of the drive.

1.1 Product Type Identification

Each model in the range of the drive systems has a model number that identifies important characteristics and specifications for that particular unit.

Figure 1-1 Product type identification

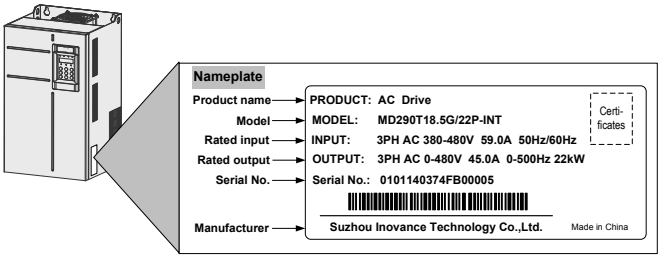

MD290 T 18.5 G / 22 P -INT

Note (a): The model number may include a suffix "XXXXXXXXXX", Where "XXXXXXXXXX" can be blank or combination of any alphanumeric and/or symbols that represents customer identity.

MD290 series AC drive

Mark	Voltage Class
T	Three-phase 380 to 480 V

Mark	Applicable Motor (kW)
18.5	18.5
...	...
160	160
...	...
450	450

Mark	Type of Applicable Motor
G	General type

Mark	Version
-INT	International
-(a)	Other variants

Mark	With Output Reactor and Cabinet
Blank	No
-L	Yes

Mark	With Built-in Braking Unit
Blank	No
B	Yes

Mark	Type of Applicable Motor
P	Fan, pump

Mark	Applicable Motor (kW)
22	18.5
...	...
200	160
...	...
500	450

www.Farazcontrol.com واحد فروش: ۰۹۱۲۹۲۷۵۱۵۹ (مهندس رمضان زاده)

1.2 Internal View of MD290

The drive can have either a plastic housing or a sheet metal housing, depending on the power rating.

Figure 1-2 Internal view MD290T18.5G/22P to MD290T37G/45P (plastic housing)

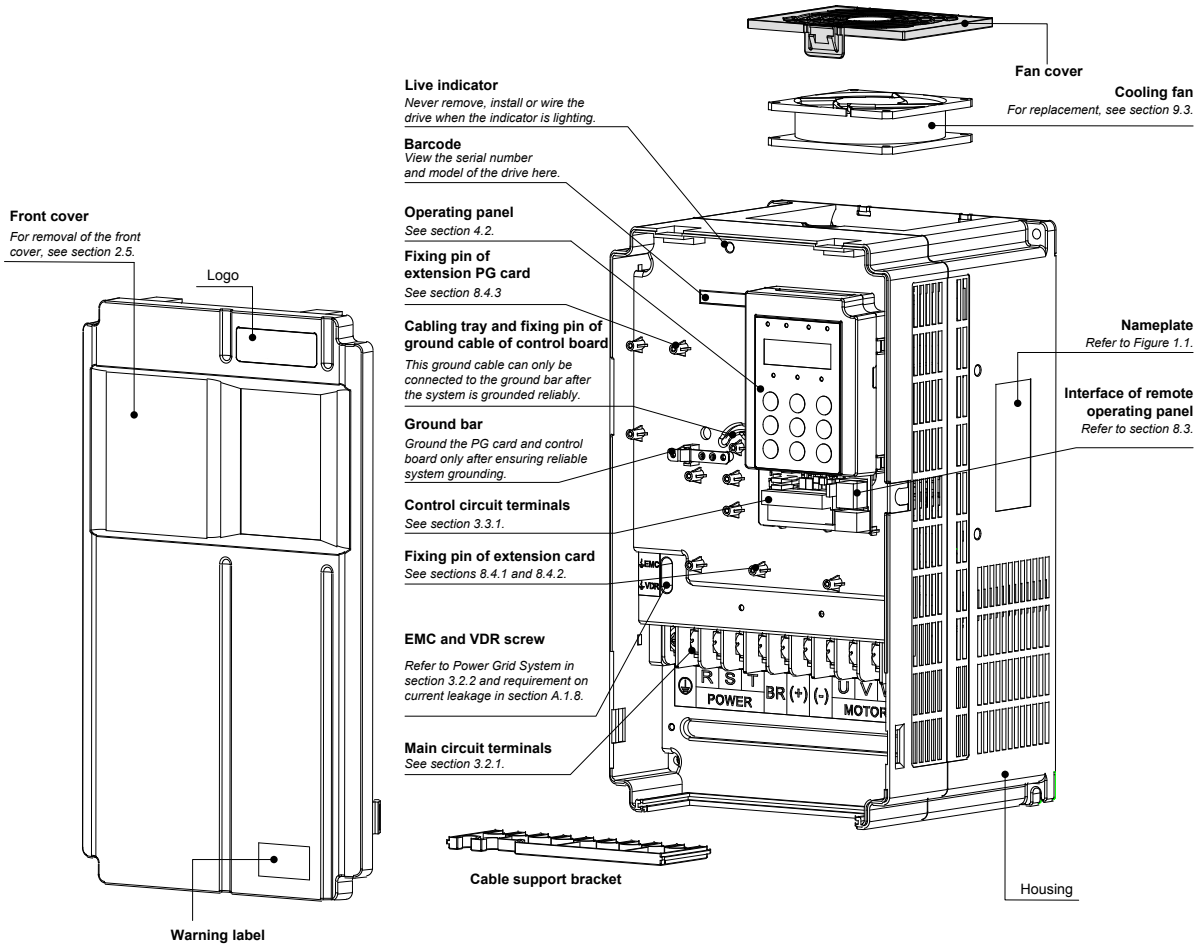



Read the user guide of the AC drive carefully before installation or operation.

Do not remove the front cover while the power is on or within 10 minutes after the power is turned off.
Wait for a period of 10 minutes after the AC drive is powered off before starting any repair, maintenance or wiring work .

www.Farazcontrol.com واحد فروش: ۰۹۱۲۹۲۷۵۱۵۹ (مهندس رمضان زاده)

Figure 1-3 Internal view of MD290T45G/55P to MD290T160G/200P (sheet metal housing)

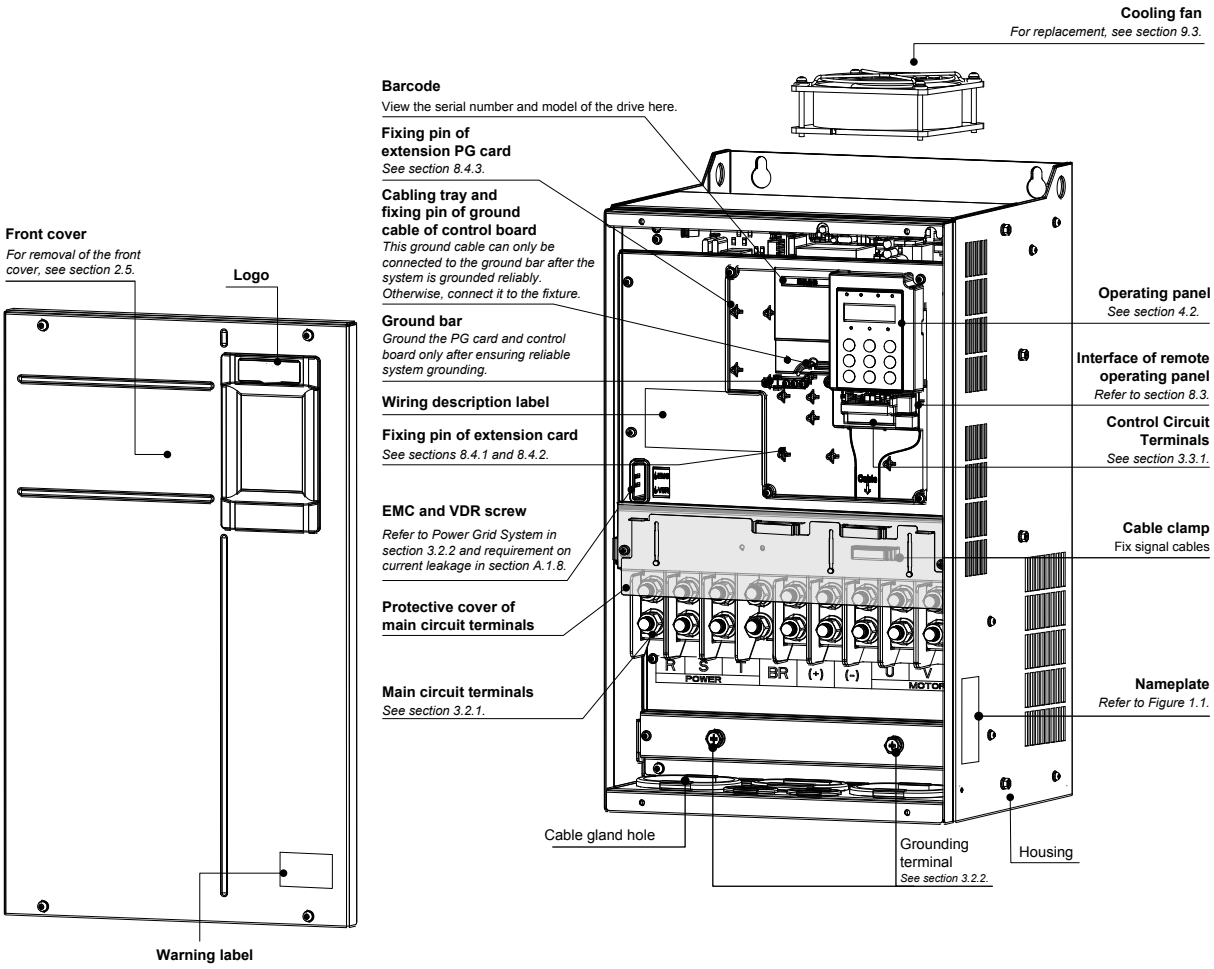



Read the user guide of the AC drive carefully before installation or operation.

Do not remove the front cover while the power is on or within10 minutes after the power is turned off.
Wait for a period of 10 minutes after the AC drive is powered off before starting any repair, maintenance or wiring work .

www.Farazcontrol.com واحد فروش: ۰۹۱۲۹۲۷۵۱۵۹ (مهندس رمضان زاده)

Figure 1-4 Internal view of MD290T200G to MD290T450G and MD290T220P to MD290T500P

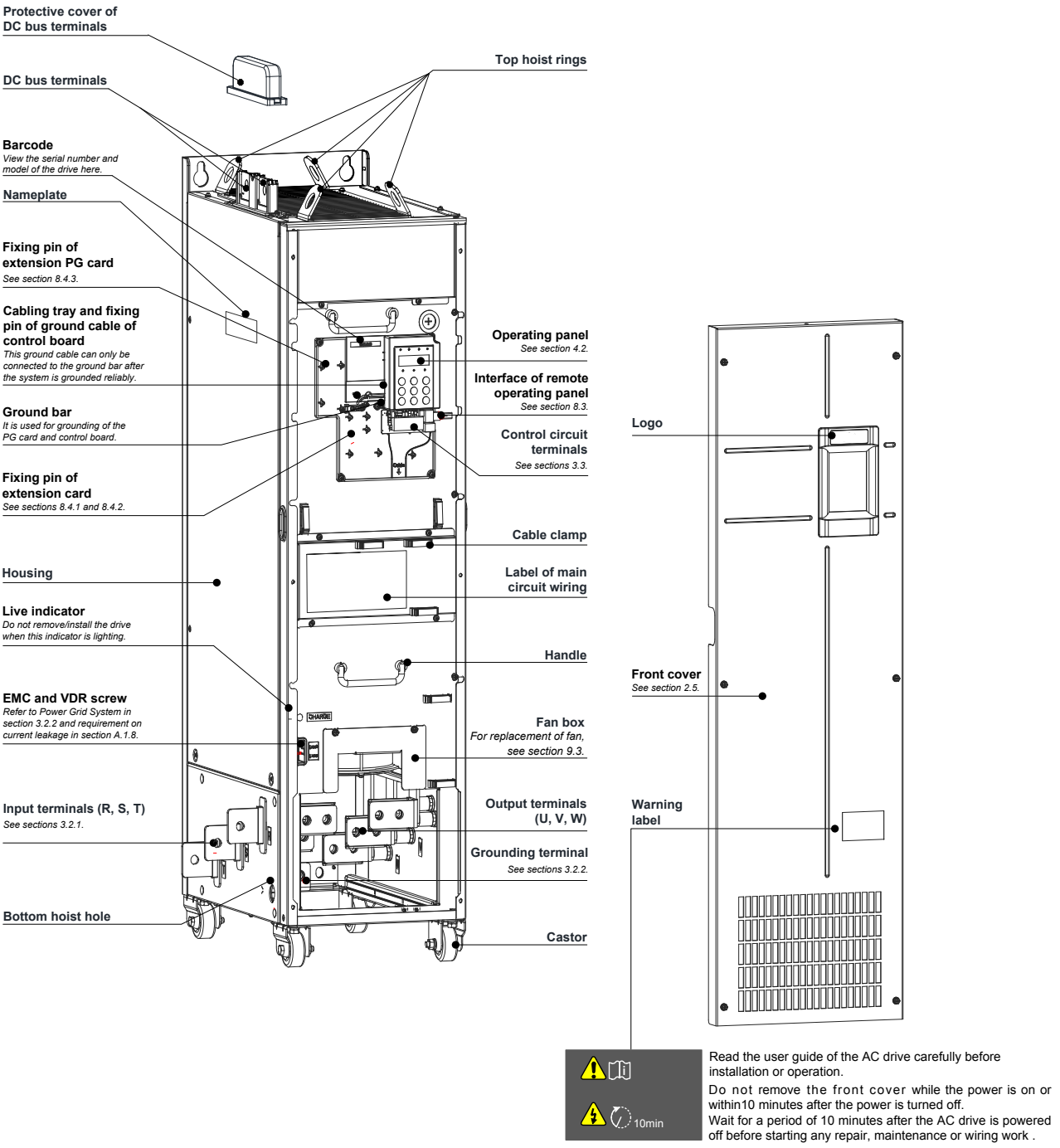

www.Farazcontrol.com واحد فروش: ۰۹۱۲۹۲۷۵۱۵۹ (مهندس رمضان زاده)

Figure 1-5 Internal view of MD290T200G-L to MD290T450G-L and MD290T220P-L to MD290T500P-L

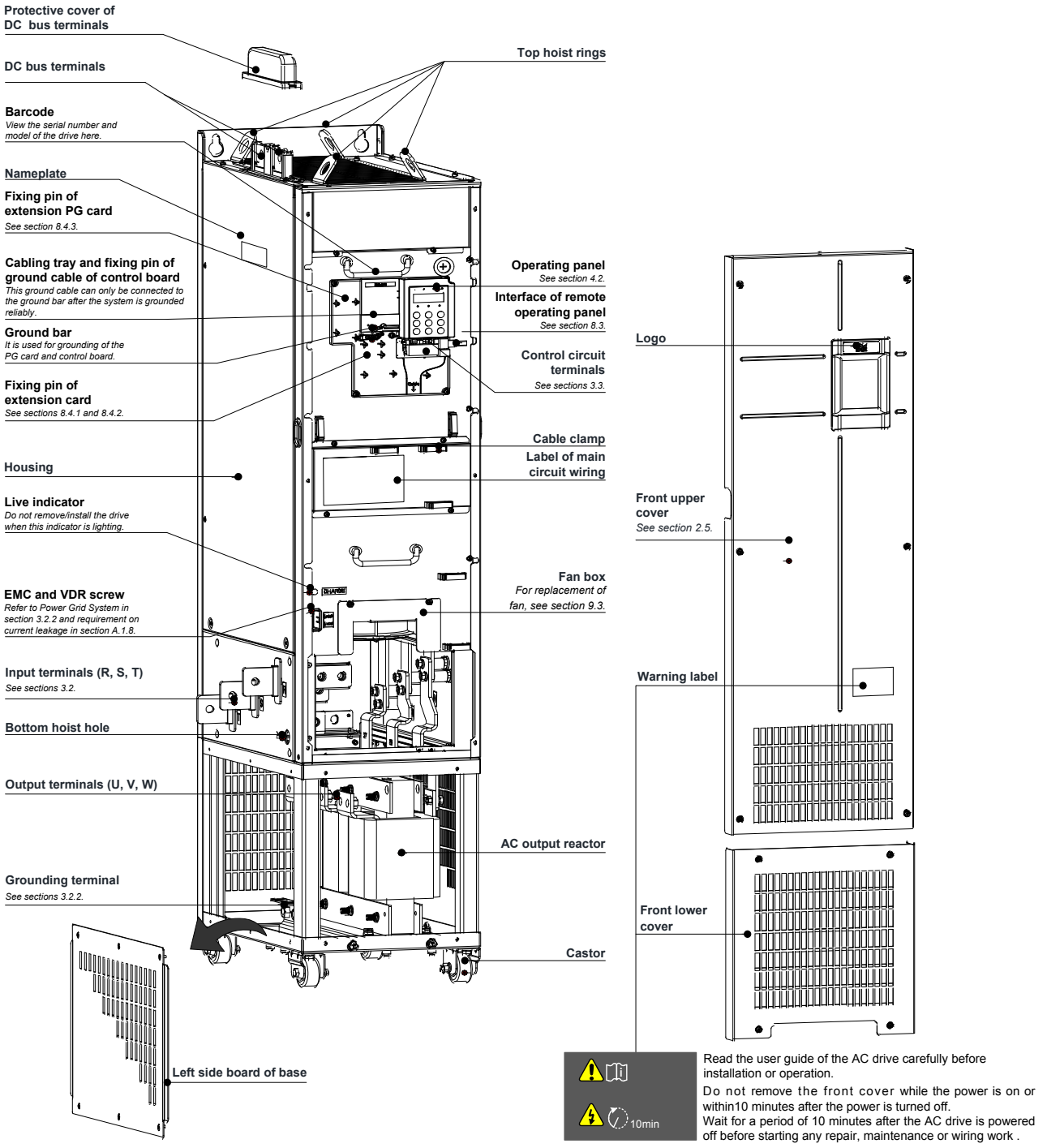

1.3 Ratings

Table 1-1 Ratings of MD290T18.5G/22P to MD290T75G/90P

Voltage Class			380 to 480 VAC						
MD290TxxG/xxP(B [1])(-INT)			18.5G/22P	22G/30P	30G/37P	37G/45P	45G/55P	55G/75P	75G/90P
Drive Input	Rated Input Voltage		Three-phase 380 to 480 V, -15% to +10%						
	Rated Input Current, [A]	G type	49.5	59	57	69	89	106	139
		P type	59	65.8	71	86	111	143	167
	Rated Input Frequency		50/60 Hz, ±5%						
	Power Capacity, [kVA]	G type	45	54	52	63	81	97	127
		P type	54	60	65	79	102	131	153
Drive Output	Applicable Motor	G type [kW]	18.5	22	30	37	45	55	75
		G type [HP]	25	30	40	50	60	75	100
		P type [kW]	22	30	37	45	55	75	90
		P type [HP]	30	40	50	60	75	100	120
	Output Current, [A]	G type	37	45	60	75	91	112	150
		P type	45	60	75	91	112	150	176
	Default Carrier Frequency, [kHz]		6	6	6	5	5	4	3
	Overload Capacity		G type: 150% for 60 Sec, P type: 110% for 60 Sec						
	Max. Output Voltage		Three-phase 380 to 480 VAC (proportional to input voltage)						
	Max. Output Frequency		500 Hz						
Braking Resistor	Recommended Power, [kW]		4	4.5	6	7	9	11	15
	Recommended Resistance, Min. [Ω]		24	24	19.2	14.8	12.8	9.6	6.8
Thermal Design	Thermal design power, [kW]		0.478	0.551	0.694	0.815	1.01	1.21	1.57
	Air flow, [CFM]		51.9	57.4	118.5	118.5	122.2	122.2	218.6
Enclosure			IP20						

Note	[1]: "B" denotes build-in brake function for MD290T18.5G/22P to MD290T75G/90P.

Table 1-2 Ratings of MD290T90G/110P to MD290T160G/200P

Voltage Class			380 to 480 VAC			
MD290TxxG/xxP(-INT)			90G/110P	110G/132P	132G/160P	160G/200P
Drive Input	Rated Input Voltage		Three-phase 380 to 480 V, -15% to +10%			
	Rated Input Current, [A]	G type	164	196	240	287
		P type	198	239	295	359
	Rated Input Frequency		50/60 Hz, ±5%			
	Power Capacity, [kVA]	G type	150	179	220	263
		P type	181	219	270	328
Drive Output	Applicable Motor	G type [kW]	90	110	132	160
		G type [HP]	120	150	180	220
		P type [kW]	110	132	160	200
		P type [HP]	150	180	220	267
	Output Current, [A]	G type	176	210	253	304
		P type	210	253	304	377
	Default Carrier Frequency, [kHz]		3	3	3	3
	Overload Capacity		G type: 150% for 60 Sec, P type: 110% for 60 Sec			
	Max. Output Voltage		Three-phase 380 to 480 VAC (proportional to input voltage)			
	Max. Output Frequency		500 Hz			
Braking Resistor	Recommended Power, [kW]		18	22	26	32
	Recommended Resistance, Min. [Ω]		5.3	5.3	3.5	3.5
Thermal Design	Thermal design power, [kW]		1.81	2.14	2.85	3.56
	Air flow, [CFM]		287.2	342.2	547	627
Enclosure			IP20			

Table 1-3 Ratings of MD290T200G to MD290T280G and MD290T220P to MD290T315P

Voltage Class		380 to 480 VAC							
Model: MD290Txxxx(-L)**(-INT)		200G	220P	220G	250P	250G	280P	280G	315P
Drive Input	Rated Input Voltage	Three-phase 380 to 480V, -15% to +10%							
	Rated Input Current, [A]	365	410	410	456	441	507	495	559
	Power Capacity, [kVA]	334	375	375	417	404	464	453	511
	Rated input frequency	50/60 Hz, ±5%							
Drive Output	Applicable Motor, [kW]	200	220	220	250	250	280	280	315
	Output Current, [A]	377	426	426	465	465	520	520	585
	Default carrier frequency, [kHz]	3	3	3	3	3	3	3	3
	Overload Capacity	G type: 150% for 60 Sec P type: 110% for 60 Sec							
	Max. output voltage	Three-phase 380 to 480 VAC (proportional to input voltage)							
	Max. output frequency	500 Hz							
Braking Resistor	Recommended Power, [kW]	38	38	42	42	48	48	54	54
	Recommended Resistance, min. [Ω]	2.9	2.9	2.7	2.7	2.3	2.3	2.1	2.1
Thermal Design	Thermal design power, [kW]	4.15	4.55	5.06	5.33	5.69	6.31	6.91	7.54
	Air flow, [CFM]	638.4	722.5	789.4	882	645	860	860	860
Enclosure		IP00							

Table 1-4 Ratings of MD290T315G to MD290T450G and MD290T355P to MD290T500P

Voltage Class		380 to 480 VAC							
Model: MD290Txxxx(-L)**(-INT)		315G	355P	355G	400P	400G	450P	450G	500P
Drive Input	Rated Input Voltage	Three-phase 380 to 480V, -15% to +10%							
	Rated Input Current [A]	565	624	617	708	687	782	782	840
	Power Capacity, [kVA]	517	571	565	647	629	715	716	768
	Rated input frequency	50/60 Hz, ±5%							
Drive Output	Applicable Motor, [kW]	315	355	355	400	400	450	450	500
	Output Current, [A]	585	650	650	725	725	820	820	880
	Default carrier frequency, [kHz]	3	3	3	3	3	3	3	3
	Overload Capacity	G type: 150% for 60 Sec (For MD290T450G, the capacity is 130%.) P type: 110% for 60 Sec							
	Max. output voltage	Three-phase 380 to 480 VAC (proportional to input voltage)							
	Max. output frequency	500 Hz							
Braking Resistor	Recommended Power, [kW]	54	60	69	69	78	78	87	87
	Recommended Resistance, min. [Ω]	2.1	1.9	1.7	1.7	1.5	1.5	1.3	1.3
Thermal Design	Thermal design power, [kW]	4.15	4.55	5.06	5.33	5.69	6.31	6.91	7.54
	Air flow, [CFM]	638.4	722.5	789.4	882	645	860	860	860
Enclosure		IP00							

Note	**: Model name with "L" in Table 1-3 and Table 1-4 means with the built-in AC output reactor and cabinet.

www.Farazcontrol.com واحد فروش: ۰۹۱۲۹۲۷۵۱۵۹ (مهندس رمضان زاده)

1.4 Technical Specifications

Table 1-3 Technical specifications of MD290

Item		Description
Standard functions	Input frequency resolution	Digital setting: 0.01 Hz Analog setting: Max. frequency x 0.025%
	Control mode	Voltage/Frequency (V/F) control
	Torque boost	Customized boost 0.1 % to 30.0 %
	V/F curve	● Straight-line V/F curve ● Multi-point V/F curve ● Square V/F curve ● Complete V/F separation ● Half V/F separation
	Ramp mode	● Straight-line ramp ● S-curve ramp Four separate acceleration/deceleration time settings in the range of 0s to 6500s.
	DC injection braking	DC injection braking frequency: 0 Hz to max. frequency DC injection braking active time: 0.0s to 36.0s. Current level of DC injection braking: 0% to 100%.
	Jog running	Frequency range of jog running: 0.00 to 50.00 Hz Acceleration/Deceleration time of jog running:0.0s to 6500.0s
	Onboard multiple preset speeds	The system implements up to 16 speeds by using simple PLC function or by using digital input signals.
	Onboard PID	The system implements the proportionalegral-derivative (PID) function in the closed-loop control.
	Automatic voltage regulation (AVR)	The system maintains a constant output voltage automatically when the grid voltage changes through the permissible range.
	Voltage limit and current limit	The system limits the output current and voltage automatically during operation to prevent frequent or excessive trips.
	Current limit and control	The system limits the current automatically during operation to prevent frequent overcurrent tripping.

Item		Description
Individualized functions	Power dip ride-through	Load feedback energy compensates for any voltage reduction, allowing the drive to continue to operate for a short time during power dips.
	Overcurrent fast prevention	The function helps to avoid frequent overcurrent faults.
	Virtual I/O	Five groups of virtual digital input/outputs (DI/DO) support simple logic control.
	Timing control	Time range: 0.0 to 6500.0 minutes
	Dual-motor switchover	The drive have two groups of motor parameters and can control up to two motors.
	Multiple field buses	The drive supports four field buses: ● Modbus-RTU ● PROFIBUS-DP ● CANlink ● CANopen
	Motor overheat protection	Option: The optional input/output (I/O) extension card allows AI3 to receive a signal from the motor temperature sensor input (PT100, PT1000) to implement motor overheat protection.
	User programmable function	Option: The optional programming card supports secondary development in a programming environment compatible with the Inovance programmable logic controller (PLC).
	Advanced PC software	Thee software allows users to configure some operating parameters, and provides a virtual oscilloscope display that shows system status.

Item		Description
RUN	Command source	Allows different methods of switching between command sources: ● Operating panel (keypad & display) ● Terminal I/O control ● Serial communication
	Main frequency reference setting channel	Supports up to 10 frequency reference setting channels and allows different methods of switching between frequency reference setting channels: ● Digital setting ● Analog voltage reference ● Analog current reference ● Pulse reference ● Communication reference
	Auxiliary frequency reference setting channel	Supports up to 10 auxiliary frequency sources, and allows fine tuning of the auxiliary frequency and main & auxiliary calculation.
	Input terminals	Standard: ● 5 digital input (DI) terminals, one of which supports up to 100 kHz high-speed pulse inputs. ● 2 analog input (AI) terminals, one of which supports only 0 to10 V input, and the other supports 0 to 10 V and 4 to 20 mA current input. Expanded capacity: ● 5 digital input (DI) terminals. ● 1 AI terminal that supports –10 to 10 V voltage input and PT100/PT1000 motor temperature sensor inputs.
	Output terminals	Standard ● 1 high-speed pulse output terminal (open-collector) for a square-wave signal output in the frequency range 0 to 100 kHz ● 1 digital output (DO) terminal ● 1 relay output terminal ● 1 analog output (AO) terminal that supports either a current output in the range 0 to 20 mA or a voltage output in the range 0 to 10 V. Expanded capacity: ● 1 extra DO terminal ● 1 extra relay output terminal ● 1 extra AO terminal that supports either a current output in the range 0 to 20 mA or a voltage output in the range 0 to 10 V.

Item		Description
Display and operating panel	LED display	The LED display shows parameter values.
	Key locking and function selection	● Keys on the control panel can be locked or partially locked electronically to prevent accidental operation. ● The range of some functions can be limited to a permitted range to prevent incorrect settings.
Protections	Phase loss protection	● Input phase loss protection ● Output phase loss protection
	Instantaneous overcurrent protection	Stop when output current exceeds 250% of rated output current
	Overvoltage protection	Stop when the main circuit DC voltage is above 820 V
	Undervoltage protection	Stop when the main circuit DC voltage is below 350 V
	Overheat protection	Protection triggered when the AC drive bridge gets overheated.
	Overload protection	Stop after running at 150% of rated current for 60 seconds.
	Overcurrent protection	Stop when output current exceeds 250% of rated current of the AC drive
	Braking protection	● Braking unit overload protection ● Braking resistor short-circuit protection
	Short-circuit protection	● Output inter-phase short-circuit protection ● Output short-circuit to ground protection
Environment	Installation location	Install the AC Drive where it is indoors and protected from direct sunlight, dust, corrosive or combustible gases, oil smoke, vapour, ingress from water or any other liquid, and salt.
	Altitude	Below 1000 m If the altitude is above 1000 m, de-rate the drive according to *1.5 De-rating*. Max. 3000 m for LVD directive requirement.
	Ambient temperature	–10°C to +40°C If the ambient temperature is in the range of 40°C to 50°C, de-rate the drive according to *1.5 De-rating*.
	Humidity	Less than 95% RH non-condensing.
	Pollution degree	PD2
	Overvoltage category	OVC III
	Vibration	Less than 5.9 m/s² (0.6 g).
	Storage temperature	–20°C to +60°C

1.5 De-rating

The drive can be operated at above rated ambient temperature, altitude and default carrier frequency by de-rating drive capacity.

■ Carrier Frequency De-rating

When carrier frequency of the drive is increased above default setting, you need to de-rate rated drive output current according to the following table:

Power	Carrier Frequency					
Phd (kW)	3 kHz	4 kHz	5 kHz	6 kHz	7 kHz	8 kHz
18.5	100.0%	100.0%	100.0%	100.0%	95.7%	91.6%
22	100.0%	100.0%	100.0%	100.0%	95.5%	91.4%
30	100.0%	100.0%	100.0%	100.0%	93.5%	87.7%
37	100.0%	100.0%	100.0%	94.4%	89.0%	84.0%
45	100.0%	100.0%	100.0%	94.0%	88.6%	83.7%
55	100.0%	100.0%	94.1%	88.9%	84.0%	79.5%
75	100.0%	91.8%	84.2%	77.5%	-	-
90	100.0%	90.8%	82.3%	74.9%	-	-
110	100.0%	91.9%	84.4%	77.7%	-	-
132	100.0%	93.1%	86.7%	80.8%	-	-
160	100.0%	92.6%	85.7%	79.7%	-	-
200	100.0%	90.0%	81.0%	73.1%	-	-
220	100.0%	90.8%	82.5%	75.1%	-	-
250	100.0%	91.2%	83.2%	76.2%	-	-
280	100.0%	91.8%	84.3%	77.8%	-	-
315	100.0%	91.7%	83.9%	77.0%	-	-
355	100.0%	92.3%	85.2%	78.7%	-	-
400	100.0%	91.4%	83.6%	76.8%	-	-

■ Ambient Temperature De-rating

Drive operation between -10°C to 40°C is normal without de-rating. Operation between 40°C and 50°C requires output current de-rating. Rated output current must be de-rated for 1.5% per 1°C temperature rise. Permissible maximum temperature is 50°C.

■ Altitude De-rating

The drive must be de-rated for an installation altitude of above 1000 meters because cooling effect available from ambient air reduces. Rated output current must be de-rated for 1% per 100 meters. Maximum altitude is 3000 meters.

2. Mechanical Installation

2.1 Installation Environment 22
2.2 Mounting Orientation and Clearance 23
2.3 Mounting Dimensions 25
2.4 Installation Method and Procedures 28
2.5 Remove and Refit the Front Cover 44

Chapter 2 Mechanical Installation

2.1 Installation Environment

Item	Requirements
Cooling and ventilation	Install the AC drive on a backplate, and ensure there is sufficient space around the enclosure to allow for efficient heat dissipation. For details, see *2.2 Mounting Orientation and Clearance*.
Mounting location	Ensure the mounting location is: • Away from direct sunlight • In an area where humidity is 95% RH or less with no condensation • Protected against corrosive, combustible or explosive gases and vapours • Free from oil, dirt, dust or metallic powders.
Vibration	Ensure the mounting location is not affected by levels of vibration that exceeds 0.6 g. Avoid installing the enclosure near punching machines or other mechanical machinery that generates high levels of vibration or mechanical shock.
Protective enclosure	The AC drive must be installed in a nonconbustible cabinet that provides effective electrical and mechanical protection for CE requirements. Installation must conform to local and regional laws and regulations, and to relevant IEC requirements.

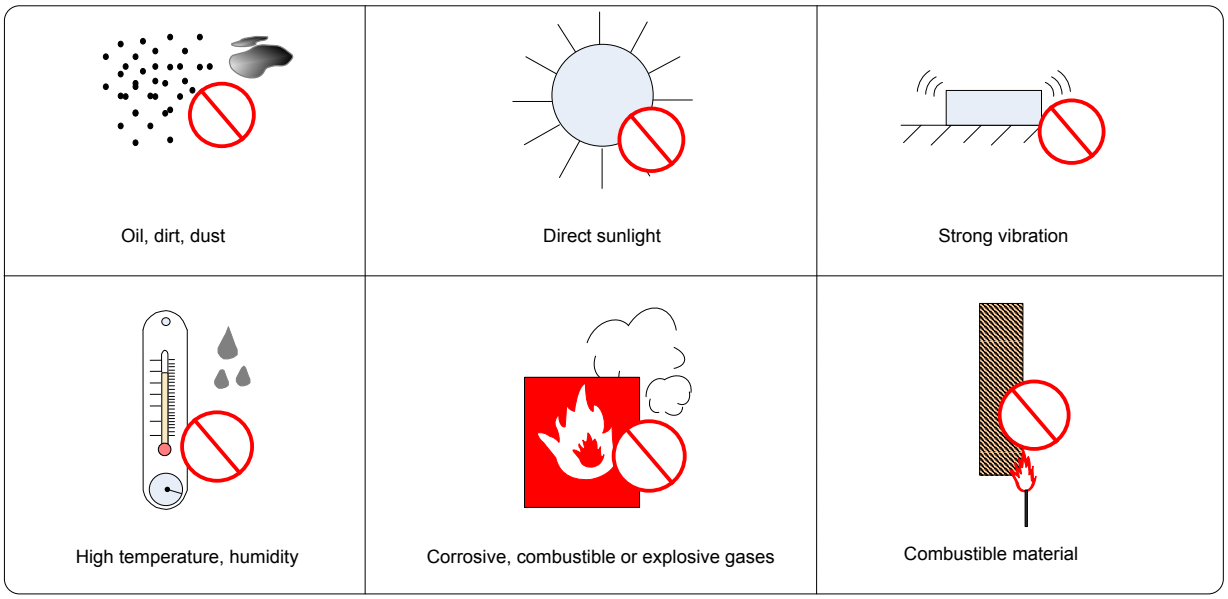

2.2 Mounting Orientation and Clearance

■ Mounting Orientation

Always mount the AC drive in an upright position.

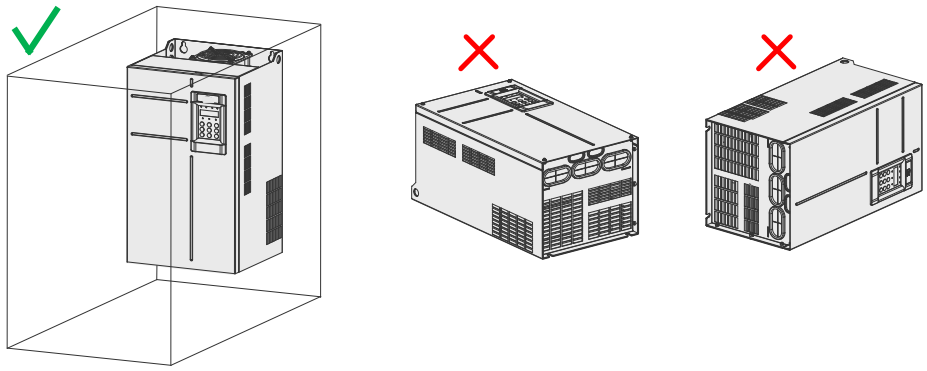

■ Mounting Clearance

The mechanical clearance varies with the power ratings of the AC drive.

Figure 2-1 Correct mounting clearance of MD290T18.5G/22P to MD290T160G/200P

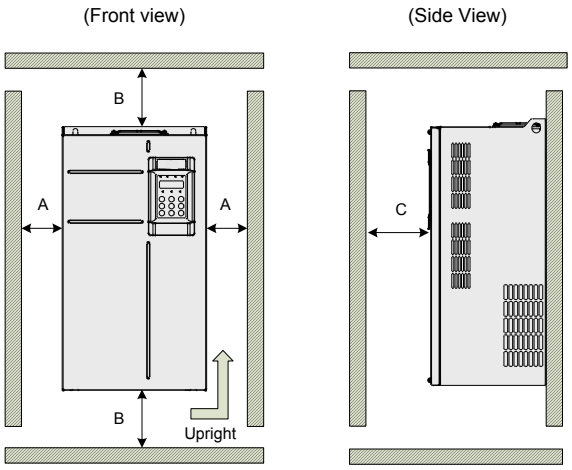

Power Rating	Clearance Requirements		
18.5 to 22 kW	A ≥ 10 mm	B ≥ 200 mm	C ≥ 40 mm
30 to 37 kW	A ≥ 50 mm	B ≥ 200 mm	C ≥ 40 mm
45 to 160 kW	A ≥ 50 mm	B ≥ 300 mm	C ≥ 40 mm

Figure 2-2 Correct mounting clearance of MD290T200G to MD290T450G and MD290T220P to MD290T500P

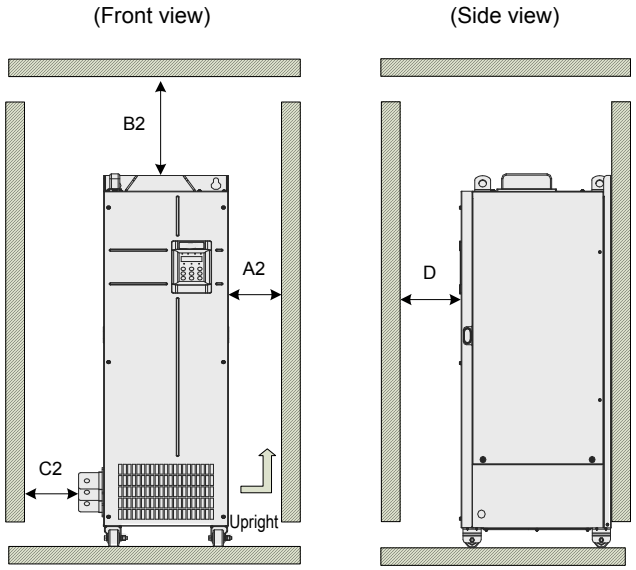

Power Rating	Clearance Requirements (Unit: mm)			
200 to 450 kW	A2 ≥ 10	B2 ≥ 250	C2 ≥ 20	D ≥ 20

The AC drive is designed with the cooling air flow direction from bottom to top. When installing several AC drives within a cabinet, it is necessary to line up the tops of the drives and allow cooling air clearance "A" as shown in Figure 2-2.

Figure 2-3 Clearance for multi-drive installation

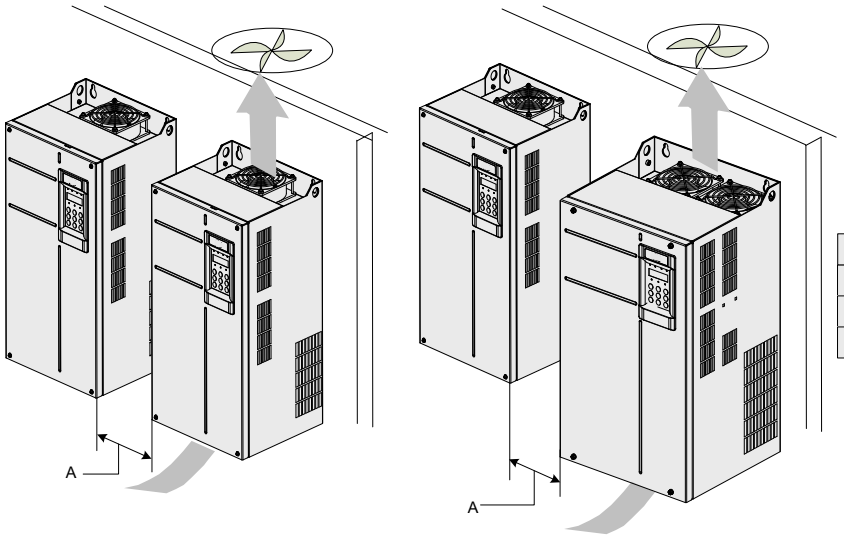

Power Rating	Clearance Requirements
18.5 to 22 kW	A ≥ 10 mm
30 to 37 kW	A ≥ 50 mm
45 to 160 kW	A ≥ 50 mm

Where an AC drive is required to be mounted directly above another AC drive, it is recommended to install an air guide plate to divert exhaust cooling air of the bottom unit away from the top unit.

Figure 2-4 Installation of an air guide plate

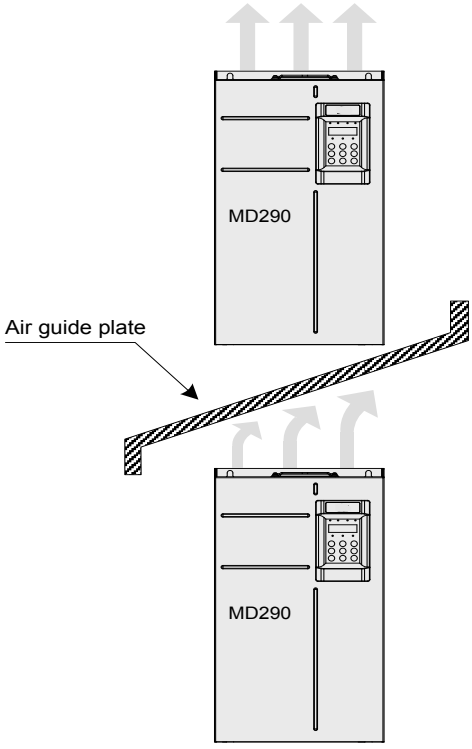

2.3 Mounting Dimensions

Figure 2-5 Overall dimensions of MD290T18.5G/22P to MD290T37G/45P (plastic housing)

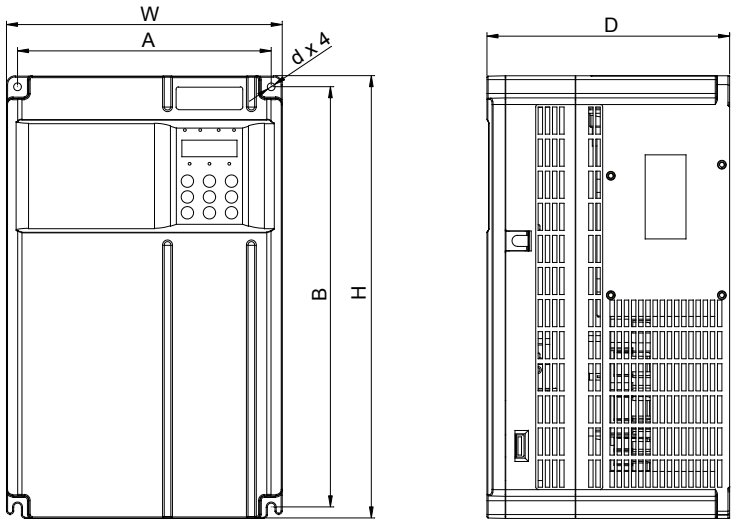

Figure 2-6 Overall dimensions of MD290T45G/55P to MD290T160G/200P (sheet metal housing)

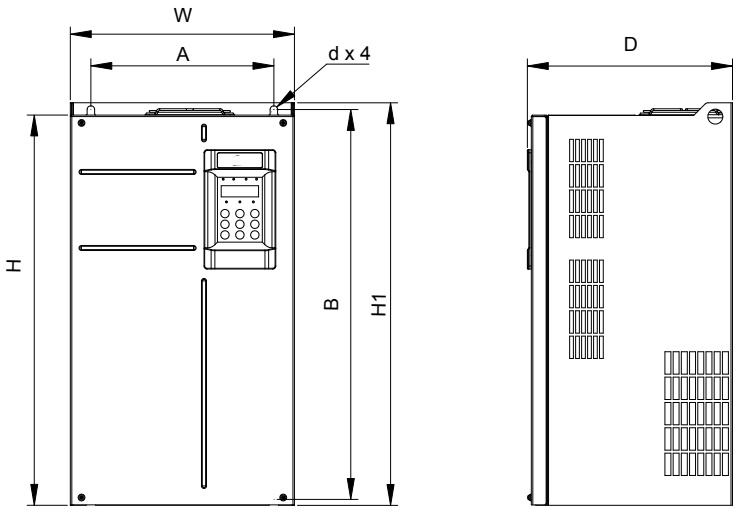

Table 2-1 Mounting dimensions of MD29018.5G/22P to MD290T160G/200P

MD290 Model	Dimensions (mm)							Weight (kg)	Housing Type
	A	B	H	H1	W	D	d		
MD290T18.5G/22P	195	335	350	-	210	192	Ø6	9.1	Plastic housing
MD290T22G/30P									
MD290T30G/37P	230	380	400	-	250	220	Ø7	17.5	Plastic housing
MD290T37G/45P									
MD290T45G/55P	245	523	525	542	300	275	Ø10	35	Sheet metal housing
MD290T55G/75P									
MD290T75G/90P	270	560	554	580	338	315	Ø10	51.5	Sheet metal housing
MD290T90G/110P									
MD290T110G/132P									
MD290T132G/160P	320	890	874	915	400	320	Ø10	85	Sheet metal housing
MD290T160G/200P									

Figure 2-7 Overall dimensions of MD290T200G to MD290T450G and MD290T220P to MD290T500P

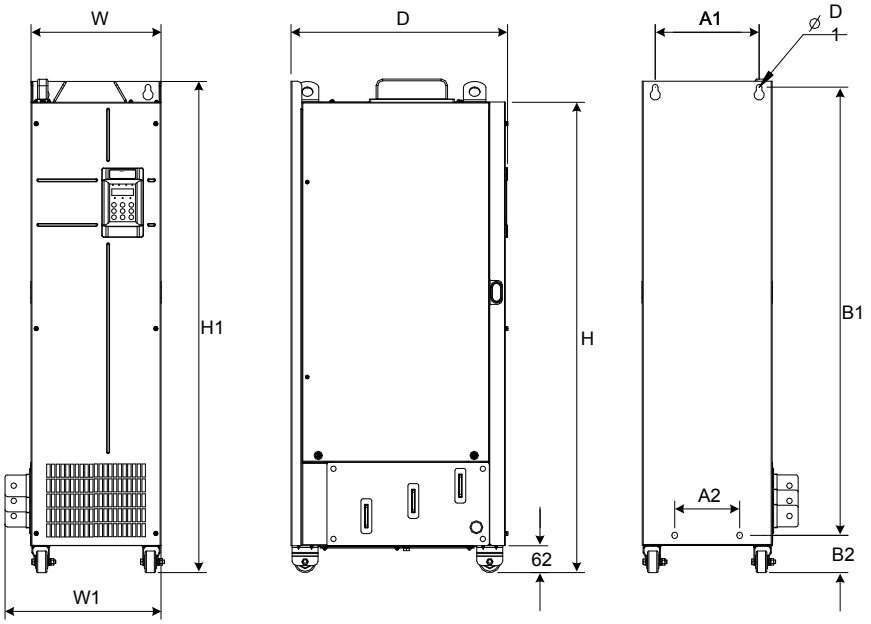

Table 2-2 Mounting dimensions of MD290T200G to MD290T450G and MD290T220P to MD290T500P

MD290 Model	Dimensions (mm)										Weight (kg)	Housing Type
	A1	A2	B1	B2	H	H1	W	W1	D	D1		
MD290T200G	240	150	1035	86	1086	1134	300	360	500	Ø13	110	Sheet metal housing
MD290T220P												
MD290T250P												
MD290T220G												
MD290T280P												
MD290T250G	225	185	1175	97	1248	1284	330	390	545	Ø13	155	Sheet metal housing
MD290T315P												
MD290T280G												
MD290T355P												
MD290T315G	240	200	1280	101	1355	1405	340	400	545	Ø16	185	Sheet metal housing
MD290T400P												
MD290T355G												
MD290T450P												
MD290T400G												
MD290T500P												
MD290T450G												

www.Farazcontrol.com واحد فروش: ۰۹۱۲۹۲۷۵۱۵۹ (مهندس رمضان زاده)

Figure 2-8 Overall dimensions of MD290T200G-L to MD290T450G-L and MD290T220P-L to MD290T500P-L

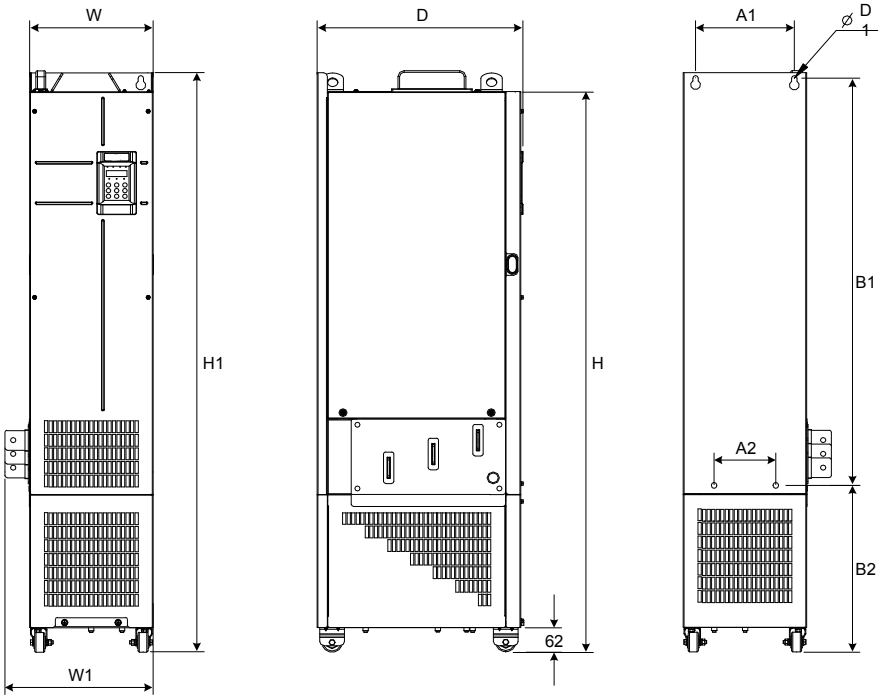

Table 2-3 Mounting dimensions of MD290T200G-L to MD290T450G-L and MD290T220P-L to MD290T500P-L

MD290 Model	Dimensions (mm)										Weight (Kg)	Housing Type
	A1	A2	B1	B2	H	H1	W	W1	D	D1		
MD290T200G-L	240	150	1035	424	1424	1472	300	360	500	Φ13	160	Sheet metal housing
MD290T220P-L												
MD290T250P-L												
MD290T220G-L												
MD290T280P-L												
MD290T250G-L	225	185	1175	435	1586	1622	330	390	545	Φ13	215	Sheet metal housing
MD290T315P-L												
MD290T280G-L												
MD290T355P-L												
MD290T315G-L	240	200	1280	432	1683	1733	340	400	545	Φ16	245	Sheet metal housing
MD290T400P-L												
MD290T355G-L												
MD290T450P-L												
MD290T400G-L												
MD290T500P-L												
MD290T450G-L												

2.4 Installation Method and Procedures

■ Installation Method

The drive units enclosed in a sheet-metal housing (45 kW and above) have weights of 35 kg or more. These units have eye bolts that allow a mechanical hoist to support the weight of the unit during installation. To prevent personal injury or damage to the equipment, you must fit and use these eye bolts to support the drive during installation.

Mounting Method	Applicable Housing	Remark
Backplate mounting	Plastic housing Sheet metal housing	The AC drive is mounted directly on the backplate of the cabinet . It is secured using four screws or bolts at the corners of the backplate.
Through hole mounting	Plastic housing Sheet metal housing	It requires a cut-out in the backplate. The housing must be secured in place by using the through-hole mounting bracket and then be lifted into the cut-out.

The drives of MD290T200G to MD290T450G and MD290T220P to MD290T500P support mounting in cabinet only.

Mounting Method	Applicable Model	Remark
Mounting in cabinet	MD290T200G to MD290T450G and MD290T220P to MD290T500P	It requires installation of fixing beam, bottom mounting bracket and guide rail first. The AC drive can be then pushed into the cabinet and secured.

2.4.1 Backplate Mounting

Note	It is very important that you identify correct mounting hole locations and diameters of the drive you are installing. And check that you have identified correct dimensions before you start to drill the mounting holes.

The backplate mounting process is as follows:

1. Select a suitable location. See recommendations in *2.1 Installation Environment*.

⚠ CAUTION	Check that there are no items of equipment, cables or pipes behind mounting surface that might be damaged when you drill mounting holes.

2. Measure and mark the drilling centers for the four mounting holes according to the dimensions shown in *Table 2-1* for your model of the drive.
3. Carefully drill the four mounting holes at the correct diameter as shown in *Table 2-1* for your model of the drive.
4. If necessary, lift the drive to the installation location. Hold it in correct position until there are fixings in place to secure it safely.
5. Add locking washers and flat washers to the securing bolts or screws, insert them through the four mounting holes in the housing, and tighten them to secure the housing to the backplate.

Figure 2-9 Backplate-mounted installation of a plastic housing

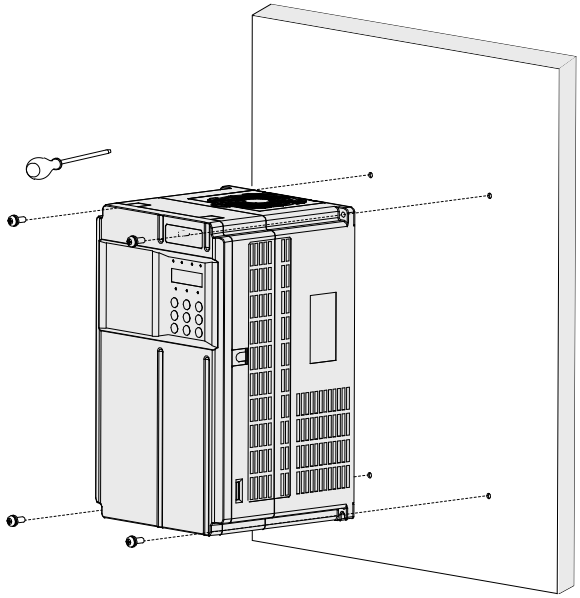

Figure 2-10 Backplate-mounted installation of a sheet metal housing

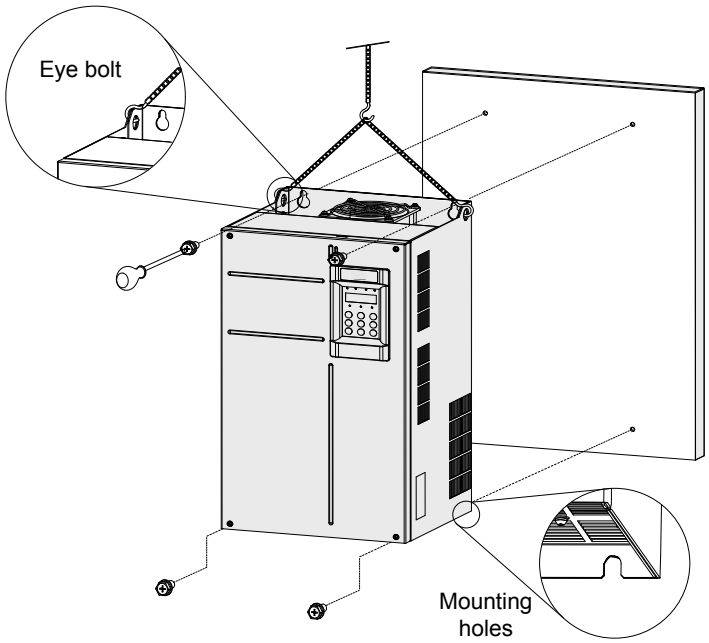

2.4.2 Through Hole Mounting

There are three steps in process of preparing a through hole mounting for the AC drive.

■ Step 1: Installing the through-hole mounting bracket

CAUTION

- The AC drive enclosed in a sheet-metal housing have weights of 35 kg or more. These units have eye bolts that allow a mechanical hoist to support the weight of the unit during installation. To prevent personal injury or damage to the equipment, you must fit and use these eye bolts to support the drive during installation.
- Always use suitable help to carry, move or support heavy drive housings. The sheet-metal housings are heavy, and you risk personal injury or damage to equipment if you attempt to carry, move or support them without help.

- Lay the drive housing on a strong, flat surface with control panel facing upwards.
- Fit the supplied through-hole mounting brackets to the housing:

  Fit brackets in correct orientation, depending on whether you are pushing the housing through the front or from the rear of the supporting surface.

  For sheet metal housing, use the two supplied eye bolts to secure the bracket to the top of the housing.

Through-hole mounting bracket installation for a plastic housing

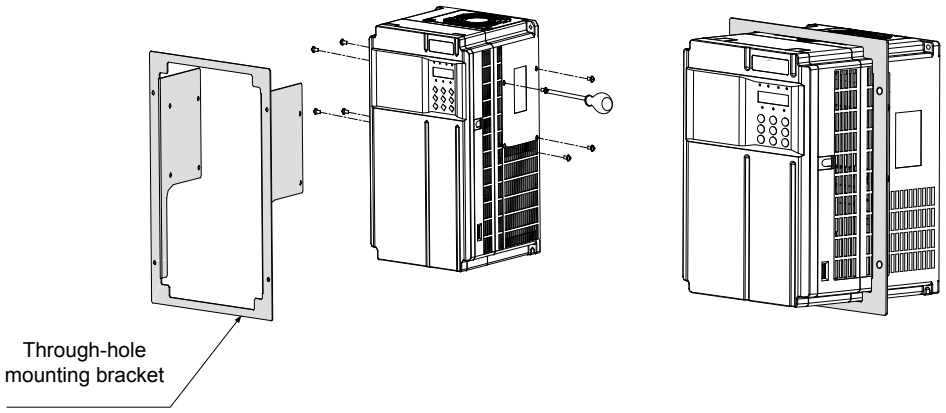

Through-hole mounting bracket installation for a sheet metal housing

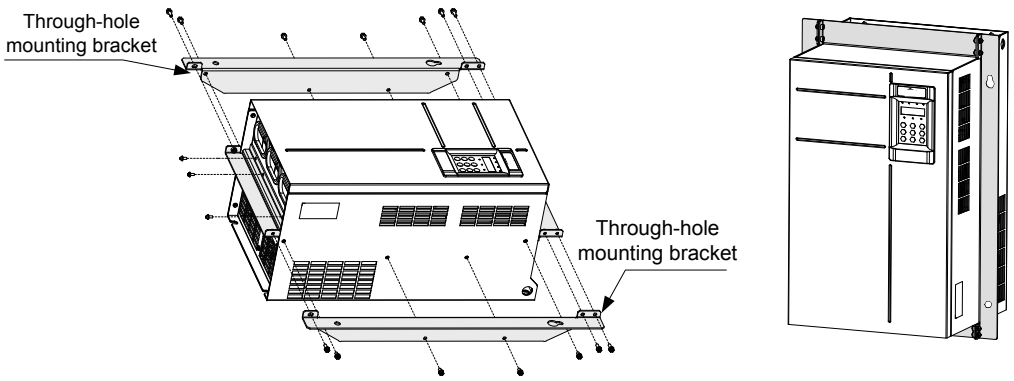

- Ensure all screws and bolts that secure the brackets to the housing are tight.

Note	The through-hole mounting bracket is an option. For dimensions, refer to the chart in *8.5 Through-hole Mounting Bracket*.

■ Step 2: Preparing the Backplate for Hole Cut-out

- Refer to *Table 2-1* to identify your model of the drive housing, and make a careful note of the following dimensions:
- Mounting hole distances A and B
- Mounting hole diameter d
- Overall dimensions of the housing H and W
- Mark the backplate to identify the centers of the four mounting holes.
- Mark an outline for the cut-out by using the dimensions H and W. Ensure the cut-out is centred with respect to the mounting holes.
- Carefully drill the four mounting holes.
- Carefully cut a rectangular cut-out hole in the supporting surface according to the markings you made in step 6.
- Prepare edges of the cut-out to remove sharp edges and burrs.

■ Step 3: Installing the AC Drive into the Hole Cut-out

- Lift the AC drive into the cut-out you have prepared.

  Insert the AC drive from the correct side of the mounting surface, depending on whether you are using a front-mounting or a rear-mounting arrangement.

CAUTION

For the sheet metal housing, use a mechanical lift/device to support the housing in its mounting location until you have fixed it in place.

- Insert securing screws/bolts in the brackets, and secure the AC drive to the backplate.

Through hole installation of a plastic housing

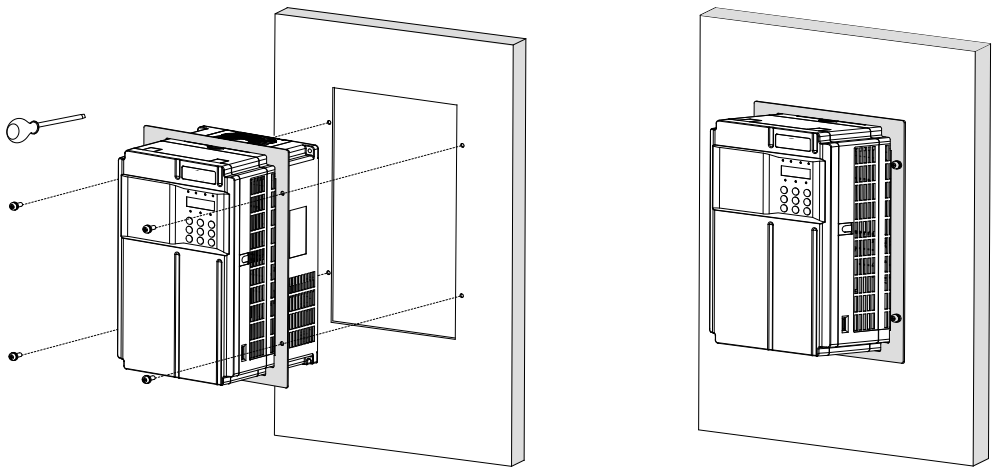

Through hole installation of a sheet metal housing

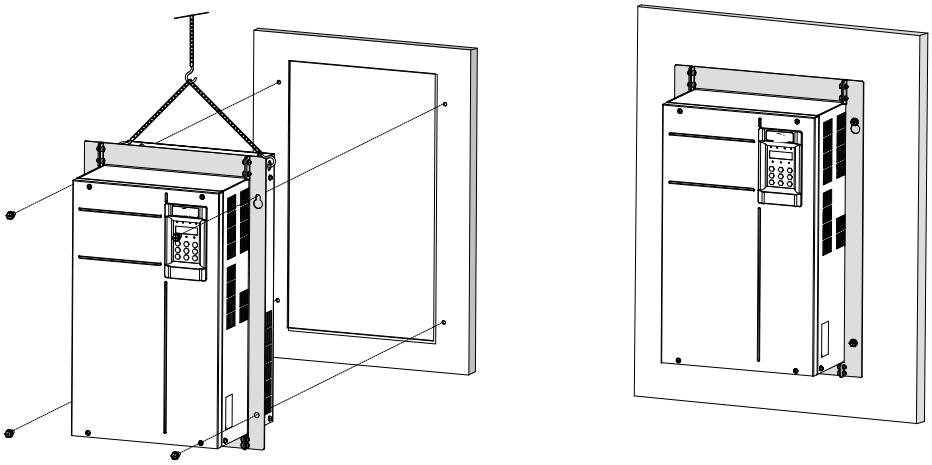

■ Through-hole Mounting Bracket Models

Through-hole Mounting Bracket Model	Applicable AC Drive Model	Bracket Dimensions
MD500-AZJ-A1T5	MD290T18.5G/22P	Refer to *8.5 Through-hole Mounting Bracket.*
	MD290T22G/30P	
MD500-AZJ-A1T6	MD290T30G/37P	
	MD290T37G/45P	
MD500-AZJ-A1T7	MD290T45G/55P	
	MD290T55G/75P	
MD500-AZJ-A1T8	MD290T75G/90P	
	MD290T90G/110P	
	MD290T110G/132P	
MD500-AZJ-A1T9	MD290T132G/160P	
	MD290T160G/200P	

2.4.3 Mounting in Cabinet

Models of MD29018.5G/22P to MD290T160G/200P support backplate mounting, through hole mounting and mounting in cabinet. Models of MD290T200G(-L) to MD290T450G(-L) and MD290T220P(-L) to MD290T500P(-L) support mounting in cabinet only.

■ Ventilation

Ventilation space must be considered when mounting drives of MD290T132G/160P, MD290T160G/200P, MD290T200G(-L) to MD290T450G(-L) and MD290T220P(-L) to MD290T500P(-L).

Figure 2-11 Cabinet without fan on the top

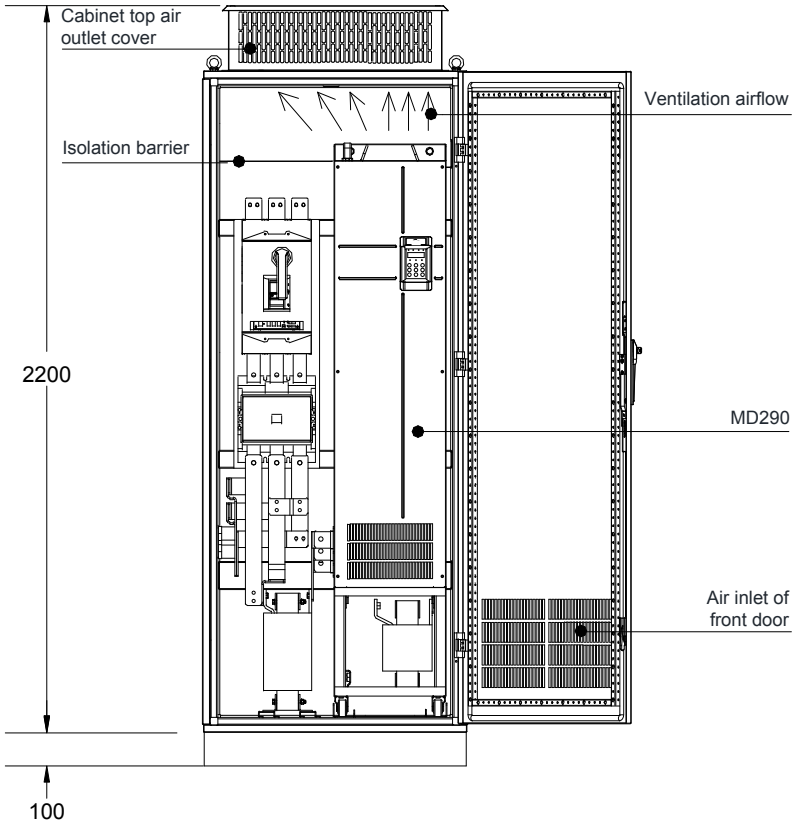

Table 2-4 Specification of direct discharging cabinet

MD290 Model	Quantity of Fans	Total Air Volume (CFM)	Effective Area of Cabinet Top Air Inlet (mm^2)	Effective Area of Cabinet Top Air Outlet (mm^2)
MD290T132G	2	541	31809	50894
MD290T160P				
MD290T160G	2	620	31809	50894
MD290T200P				
MD290T200G(-L)	2	586	31809	50894
MD290T220P(-L)				
MD290T250P(-L)				
MD290T220G(-L)	2	722	31809	50894
MD290T280P(-L)				
MD290T250G(-L)	3	789	47713	76341
MD290T315P(-L)				
MD290T280G(-L)	3	882	47713	76341
MD290T355P(-L)				
MD290T315G(-L)	3	644	47713	76341
MD290T400P(-L)				
MD290T355G(-L)	3	796	47713	76341
MD290T450P(-L)				
MD290T400G(-L)	3	796	47713	76341
MD290T500P(-L)				
MD290T450G(-L)	3	796	47713	76341

Note:

1. CFM = 0.0283 m^3/min

2. Effective area means through-hole area.

3. The specification is only applicable to single unit installation in cabinet. For multi-drive installation in cabinet, contact Inovance for technical support.

Figure 2-12 Cabinet with fan on the top

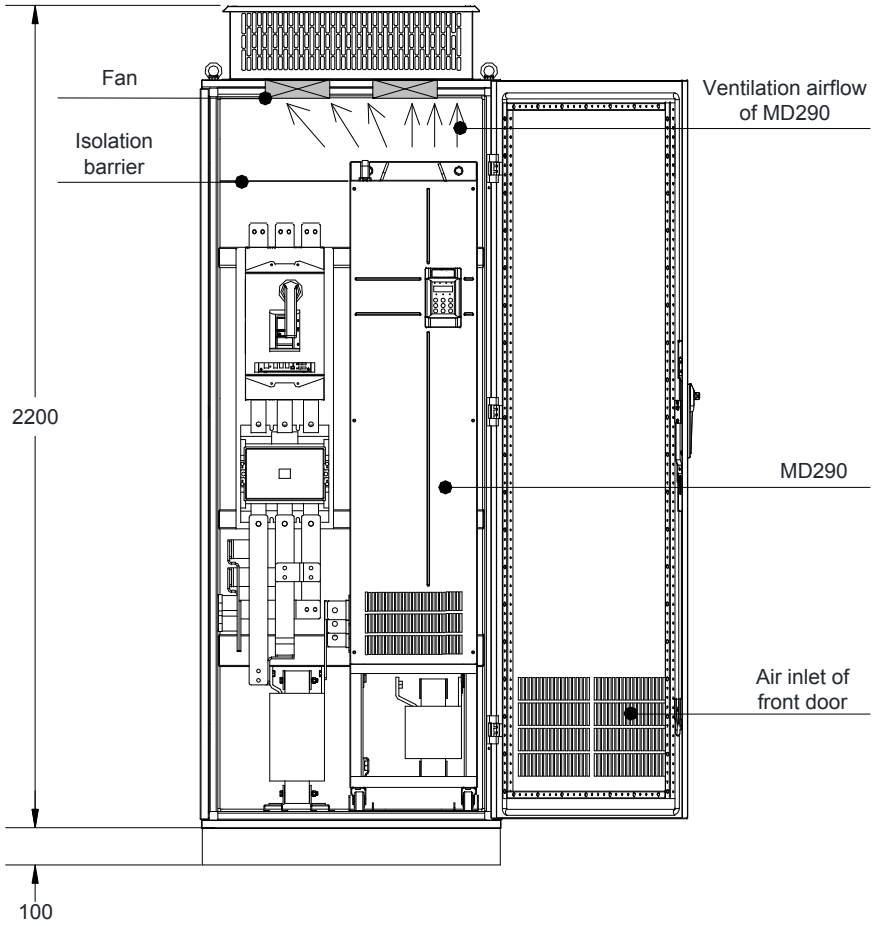

Table 2-4 Specification of cabinet with fan on the top

MD290 Model	Quantity of Fans	Total Air Volume (CFM)	Effective Area of Cabinet Top Air Inlet (mm^2)	Min. Air Volume Required by the Top Fan (CFM)	Effective Area of Cabinet Top Air Outlet (mm^2)
MD290T132G	2	541	31809	50894	S = 0.942 x N x (Dout2-DHUB2) In the preceding formula, N means the quantity of top fans, Dout means diameter of the top fan, and DHUB means diameter of the top fan center HUB.
MD290T160P					
MD290T160G	2	620	31809	50894	
MD290T200P					
MD290T200G(-L)	2	586	31809	50894	
MD290T220P(-L)					
MD290T250P(-L)					
MD290T220G(-L)	2	722	31809	50894	
MD290T280P(-L)					
MD290T250G(-L)	3	789	47713	76341	
MD290T315P(-L)					
MD290T280G(-L)	3	882	47713	76341	
MD290T355P(-L)					
MD290T315G(-L)	3	644	47713	76341	
MD290T400P(-L)					
MD290T355G(-L)	3	796	47713	76341	
MD290T450P(-L)					
MD290T400G(-L)	3	796	47713	76341	
MD290T500P(-L)					
MD290T450G(-L)	3	796	47713	76341	

Note:

1. CFM = 0.0283 m^3/min

2. Effective area means through-hole area.

3. The specification is only applicable to single unit installation in cabinet. For multi-drive installation in cabinet, contact Inovance for technical support.

As shown in the following figure, an insulation barrier is required to prevent hot air circulating inside the cabinet.

Figure 2-13 Insulation barrier in the cabinet

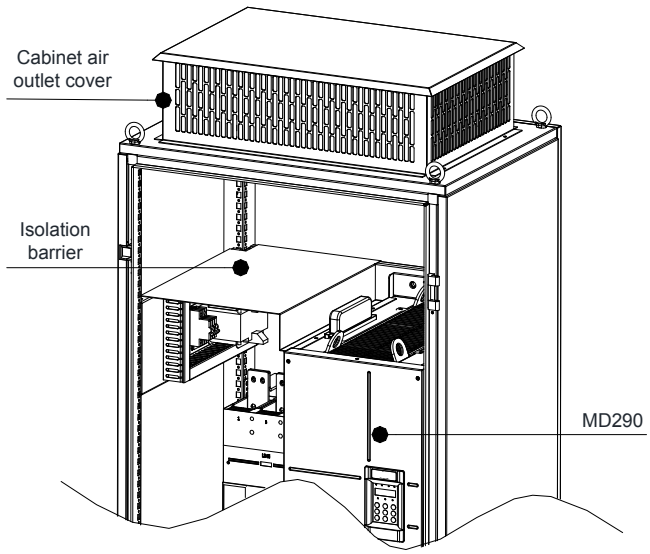

■ Precautions

Nine-folding AL cabinet (PS cabinet) is recommended for installation of the drive.

Before installing the AC drive, check whether fixing beams with fixing holes are mounted to the cabinet back correctly. Then prepare bottom mounting bracket and guide rail. Reserve sufficient space at the bottom of the cabinet for side entry copper bar joint and operation.

You can push the AC drive into the cabinet or pull it out of the cabinet after moving the drive onto the guide rail. Make sure to align the castors to the guide rail and arrange two persons for drive push-in and pull-out to ensure safety.

CAUTION

- Refer to Figure 2-3 for mounting clearance requirements. Ensure there is sufficient space allow for efficient heat dissipation of the drive and the other devices in the cabinet.
- Arrange two persons for drive push-in and pull-out, as shown in Figure 2-13 and Figure 2-14.
- Refer to Figure 2-11 for cabinet layout before mounting the drive in cabinet. Wind screen must be installed at the top of the cabinet to avoid circulation of MD290 ventilation airflow. In addition, ensure there are air inlet openings at the bottom of the cabinet.
- For the bottom mounting bracket (delivered together with the product), see section *8.5 Through-hole Mounting Bracket*.

There are three steps of installing the AC drive in cabinet.

Step 1: Get acquainted with cabinet layout.

Figure 2-14 Recommended cabinet layout of MD290T355G to MD290T450G and MD290T450P to MD290T500P

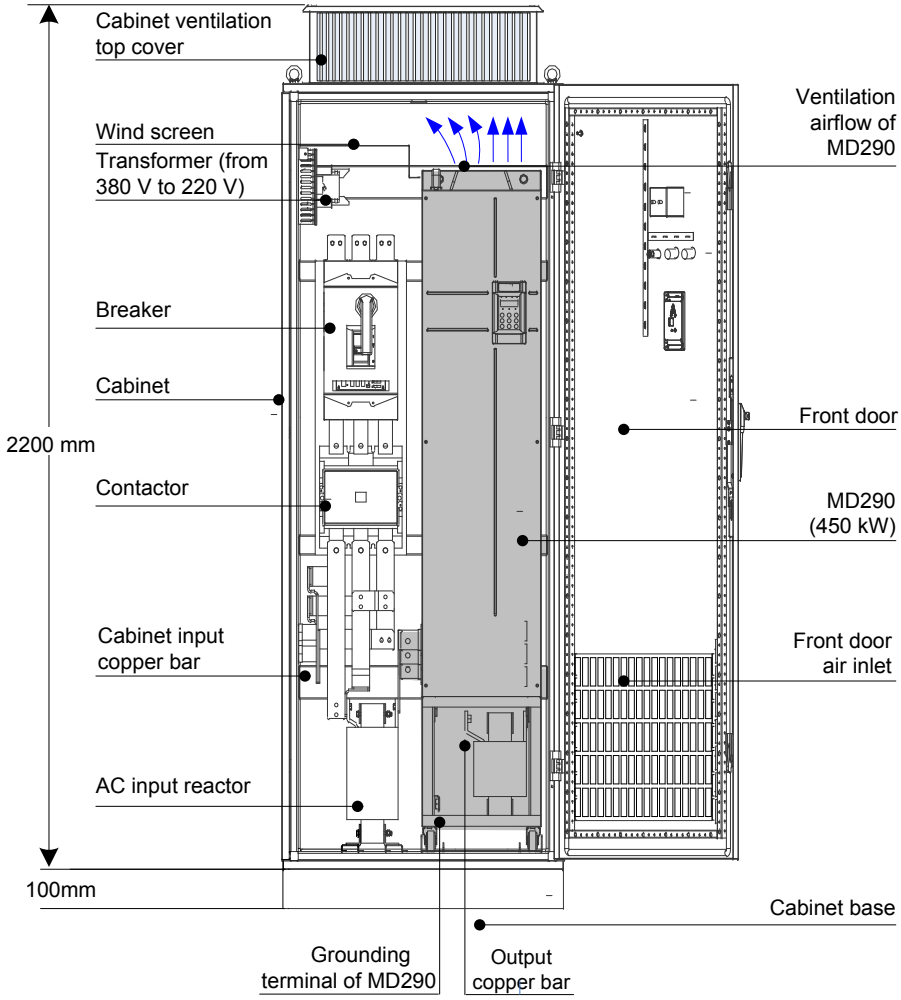

Note	
	• The cabinet dimension is 2200 x 800 x 600 mm. The height 2200 mm includes the 200 mm cabinet ventilation top cover but does not include the 100 mm cabinet base. • After push-in, remove the baffle on the top of the drive, preventing occurrence of overcurrent because ventilation air cannot flow out.

Step 2: Secure the fixing beam and reserve mounting holes

The cross section of the nine-folding AL cabinet is shown in the following figure.

Figure 2-15 Cross section of the nine-folding AL cabinet

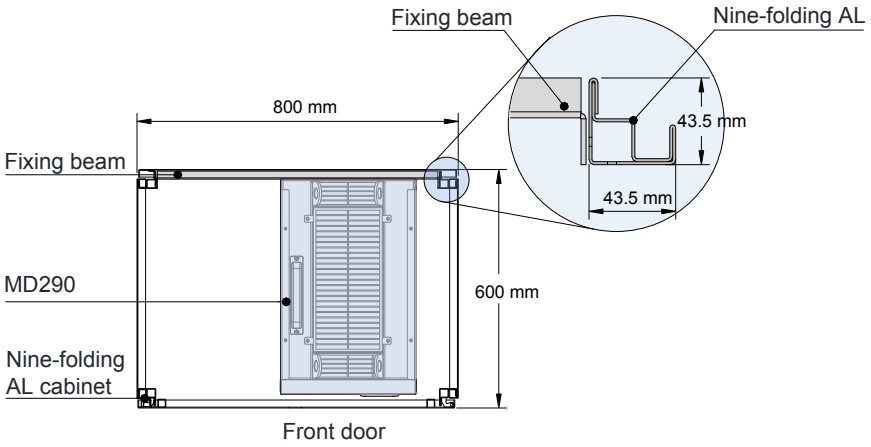

When the drive of MD290T250G(-L) to MD290T450G(-L) and MD290T315P(-L) to MD290T500P(-L) is mounted in the nine-folding AL cabinet of 600 mm deep, the fixing beam must fold inwards. When the drive is mounted in the cabinet of 800 mm deep, folding inwards is not required.

Figure 2-16 Folding inwards of the fixing beam in the cabinet of 600 mm deep

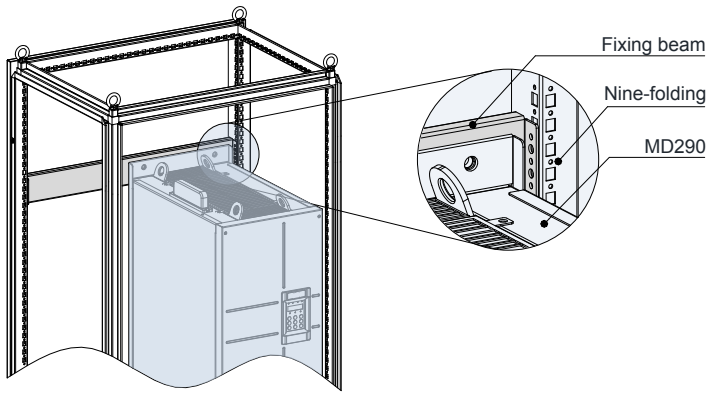

Note	If the cabinet has front door and back door, the cabinet of 600 mm deep is too small to accommodate the drive of MD290T250G(-L) to MD290T450G(-L) and MD290T315P(-L) to MD290T500P(-L). In this case, the cabinet of 800 mm deep is recommended.

Prepare and install the bottom mounting bracket and guide rail.

- Take the bottom mounting bracket out and install it at the bottom of the nine-folding AL cabinet. If a non-nine-folding AL cabinet is used, drill mounting holes for the mounting bracket on site.

Figure 2-17 Installing the bottom mounting bracket

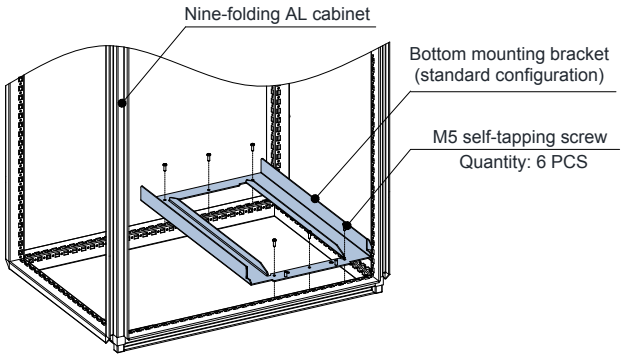

- Assemble the guide rail (model: MD500-AZJ-A3T10, option).

Figure 2-18 Assemble the guide rail

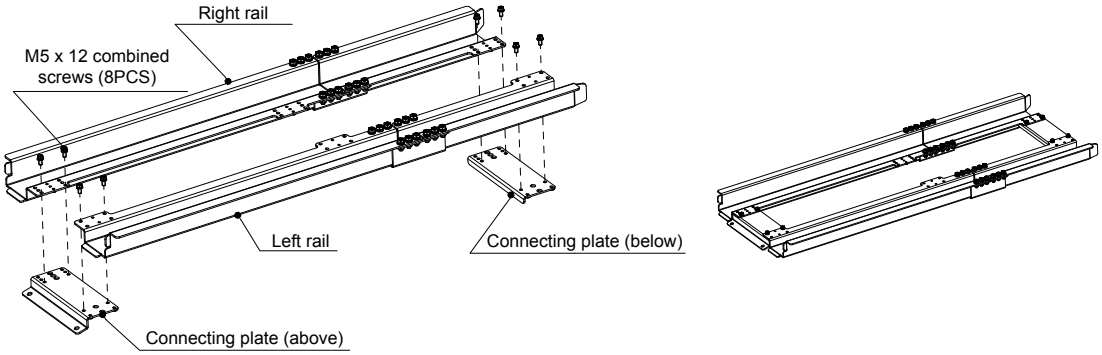

Connect the guide rail to the bottom mounting bracket, and fix them with two M6 nuts.

Figure 2-19 Connect the guide rail to the bottom mounting bracket

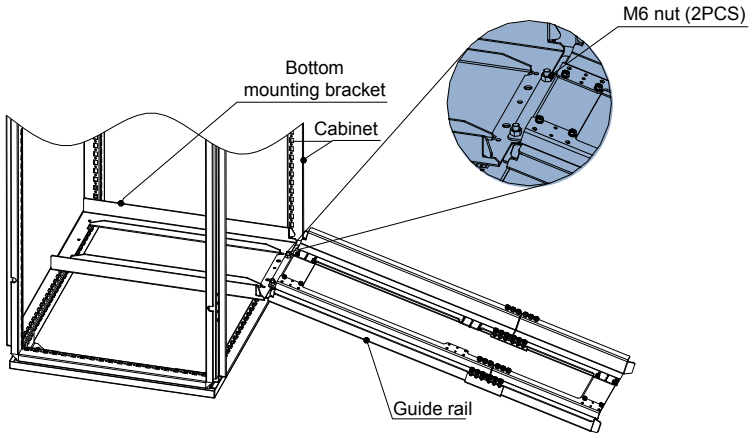

Step 3: Install the AC drive in the cabinet.

- Remove the front cover from the drive (refer to *2.5 Remove and Refit the Front cover*). Then the handle is exposed.
- Arrange two persons to align castors of the drive to the guide rail.

Figure 2-20 Align castors of the drive to the guide rail

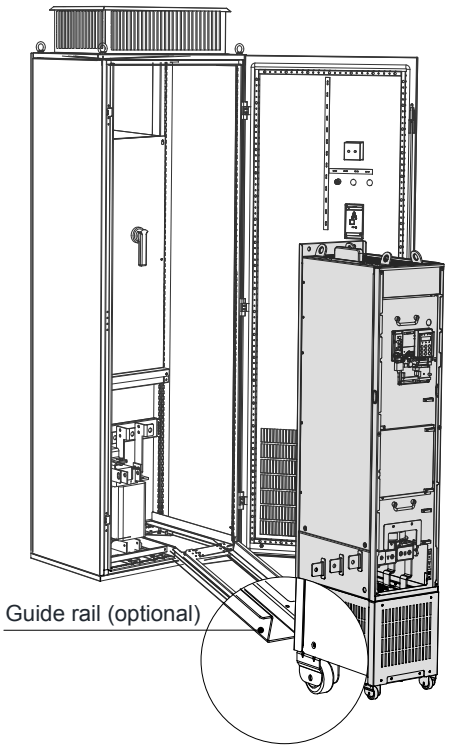

- Push the drive into the cabinet slowly. Please use auxiliary strap in the process of push-in to prevent turnover, as shown in the following figure.

Figure 2-21 Push the drive into the cabinet

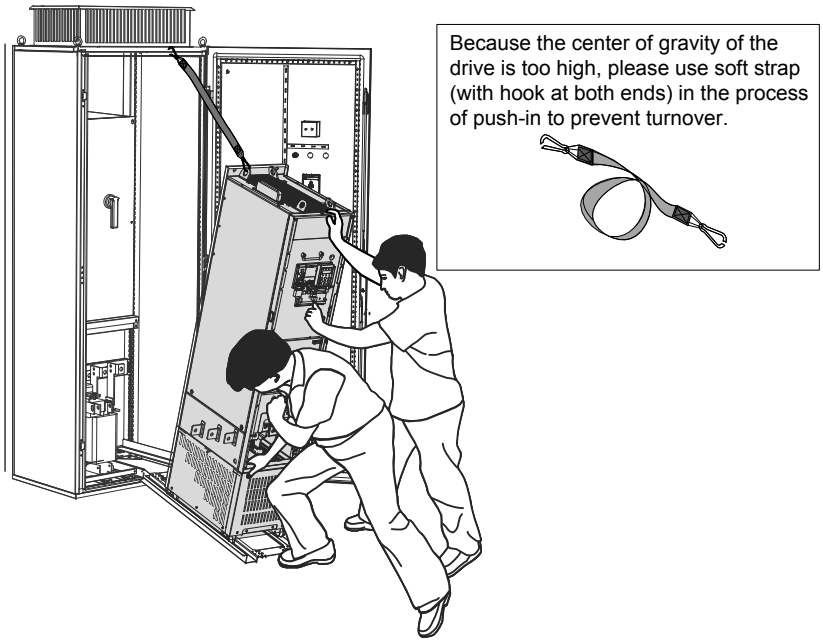

Figure 2-22 Push-in completed

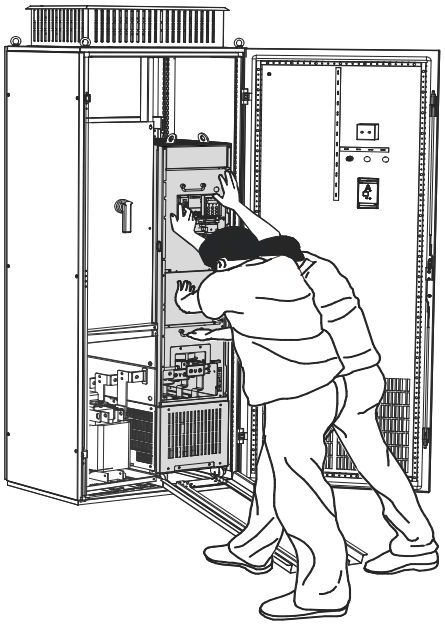

- Fix the AC drive to the beams on the back of the cabinet, as shown in the following figure.

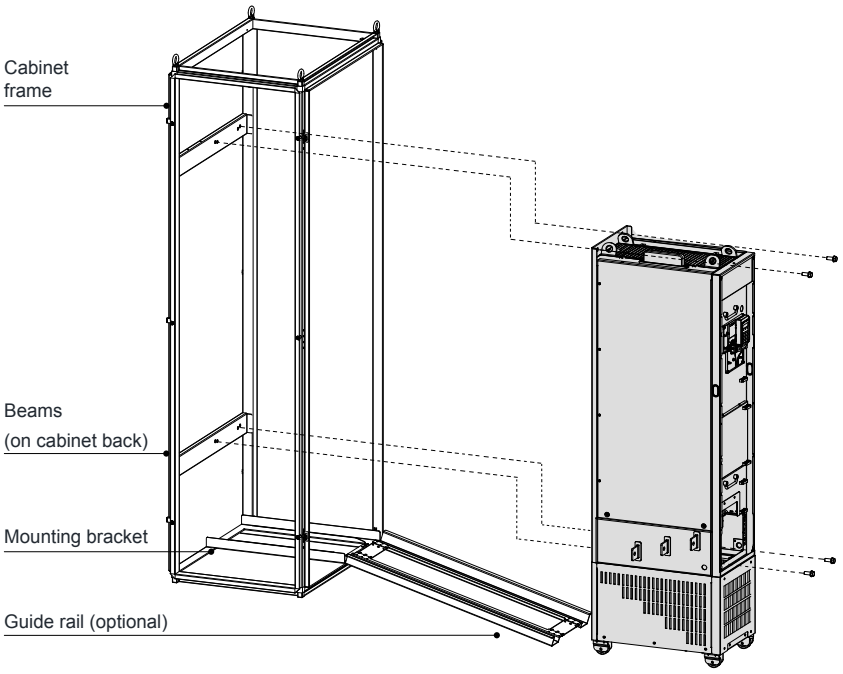

- Check that installation of the drive is secure and remove the guide rail.

Note

- Ensure the four mounting holes on the back of the drive are connected to the beams securely.
- After push-in is completed, remove the baffle on the top of the drive. The baffle is used to prevent foreign objects such as screws from falling into the ventilation when mounting the drive in the cabinet.

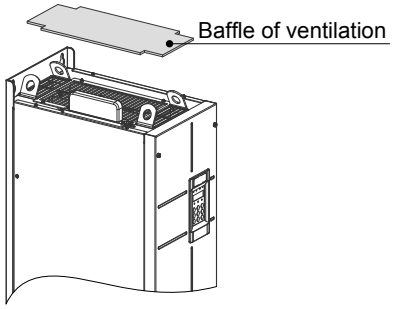

- Please use top hoist rings to move or hoist the drive. If it is necessary to place the drive in a horizontal position, use the top hoist ring and bottom hoist hole when you hoist the drive again. Ensure the DC bus terminals suffer no stress.

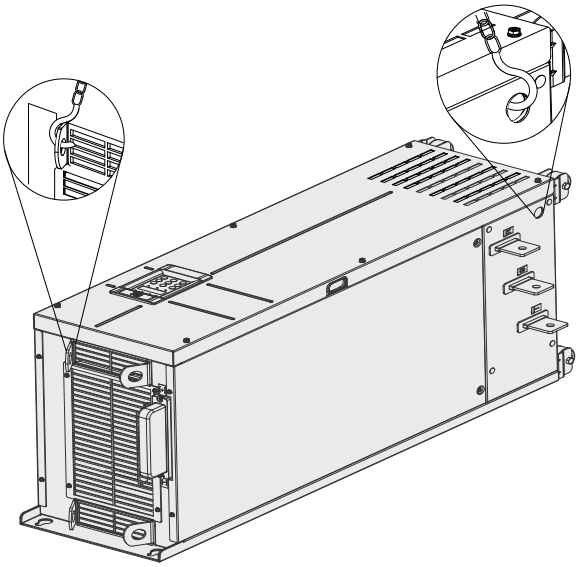

- If it is necessary to place the drive in an upright position, prevent a stress on both sides of the drive and prevent placing the drive on an inclined floor because the drive weighs almost 200 kg. If inclination exceeds 5°, the drive may turn over.

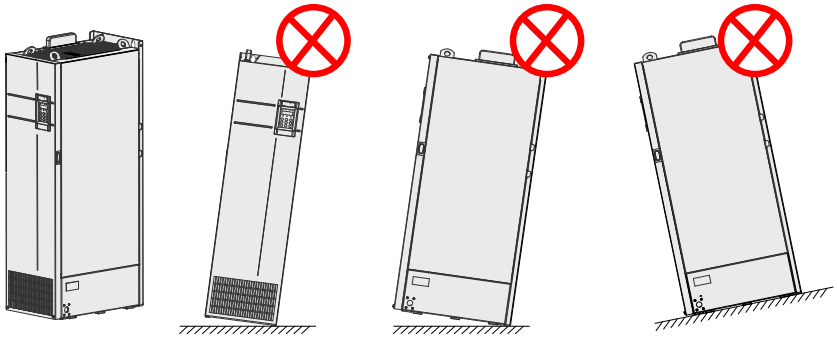

2.5 Remove and Refit the Front Cover

You must remove the front cover before performing electrical installation

WARNING

- Ensure the drive power-off time exceeds 10 minutes before removing the cover.
- Be careful when removing the front cover. A falling cover may cause damage to the drive or personal injury.

■ Remove and Refit the Front Cover of a Plastic Housing

Removal

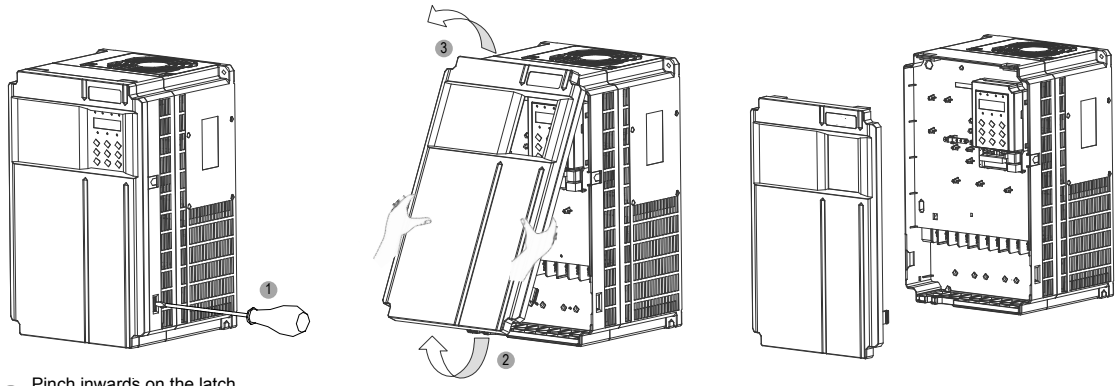

1 Pinch inwards on the latch on both sides of the cover to release the cover .

2 Hold the lower part of the front cover.

3 Lift the front cover.

Refitting

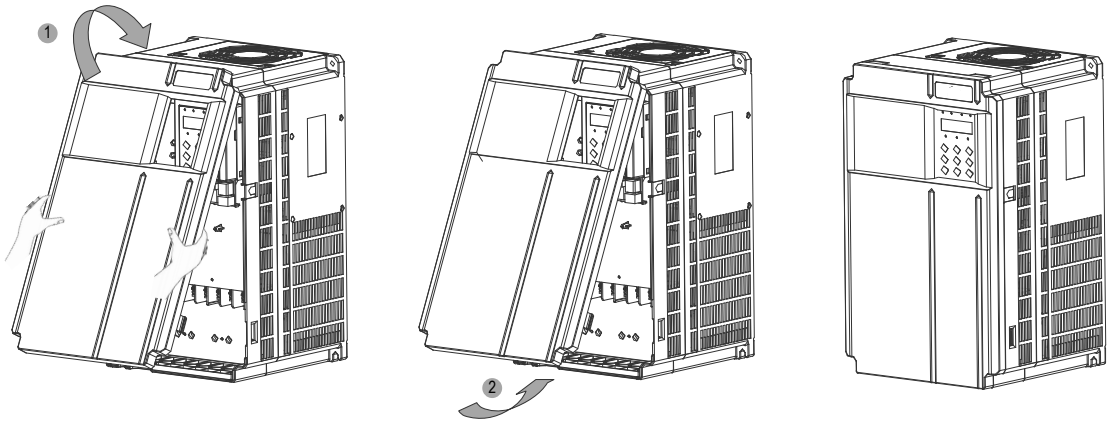

1 Locate the cover top at its fixing position.

2 Align the front cover to the drive and push it down in the arrow direction until the side latches are in place.

■ Remove and Refit the Front over of a Sheet Metal Housing

Removal

Loosen four screws from the front cover, and then remove the front cover.

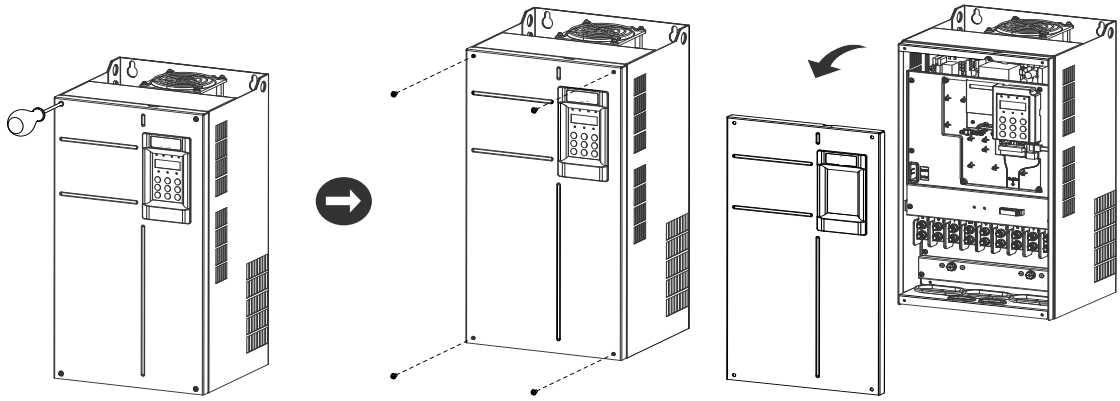

Reattaching

Locate and align the fixing hook at the top of the cover and secure the four screws.

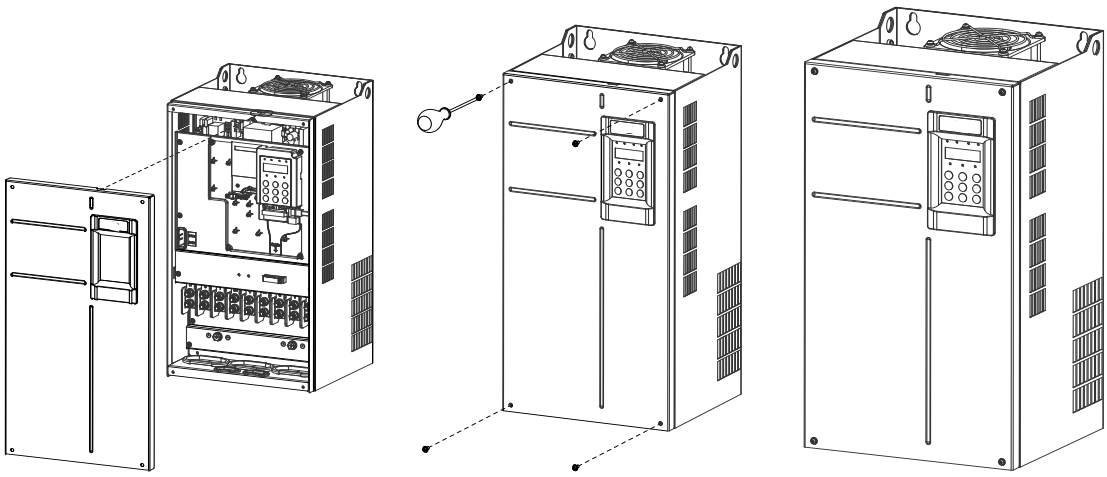

■ Remove and Refit the Front Cover of MD290T200G(-L) to MD290T450G(-L) and MD290T220P(-L) to MD290T500P(-L)

Removal

Loosen six screws from the front cover, and then remove the front cover.

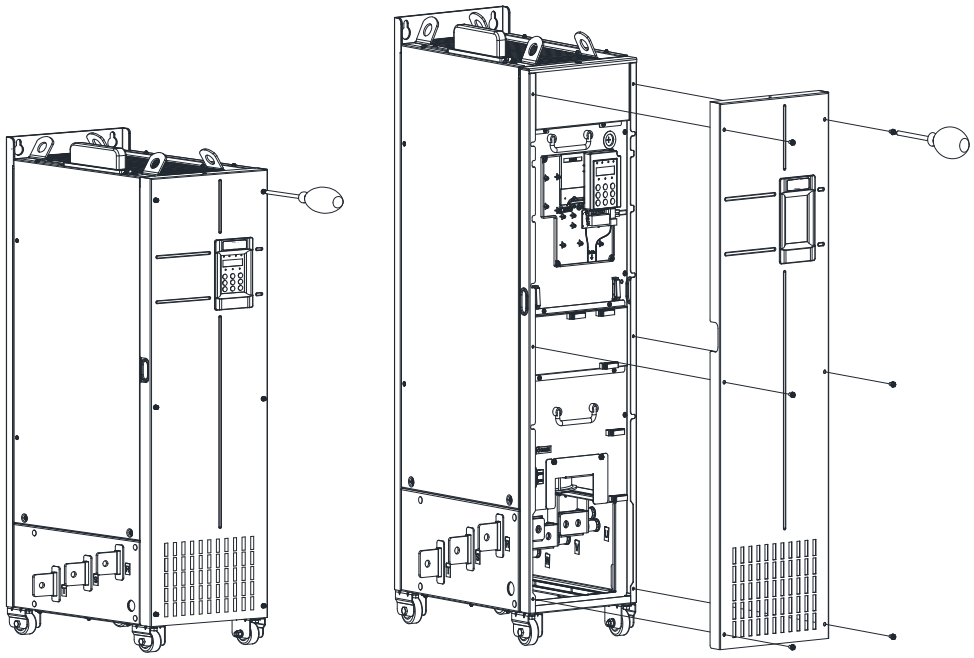

Reattaching

Locate and align the fixing hook at the top of the cover and secure the six screws.

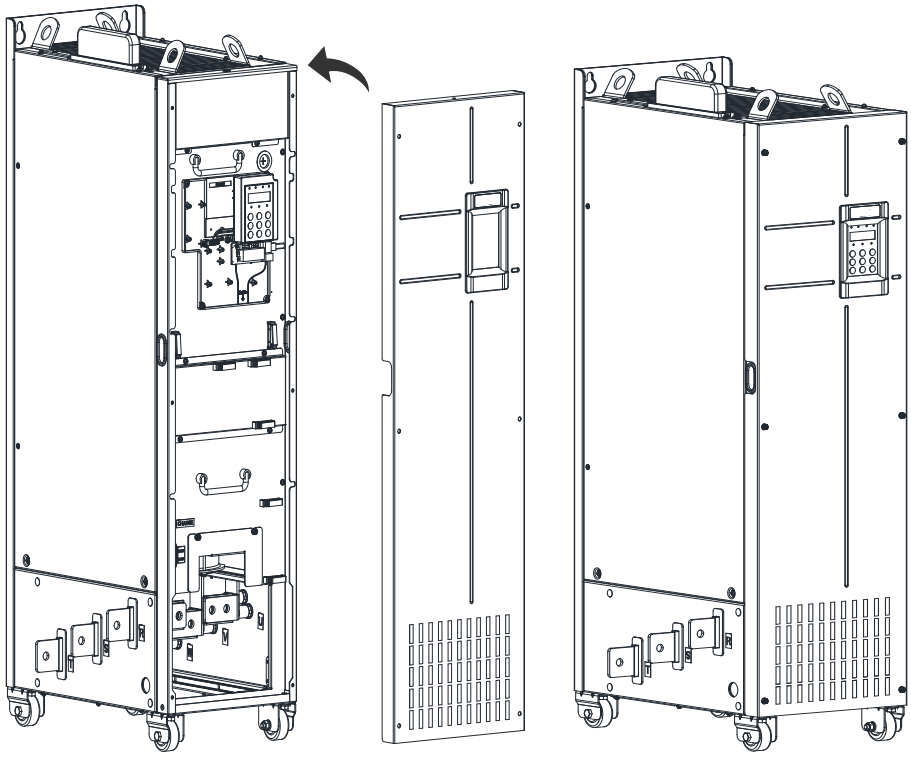

3. Electrical Installation

3.1 Typical System Connection 48
3.2 Main Circuit Wiring 49
3.3 Control Circuit Wiring..... 68
3.4 Wiring Checklist..... 77

Chapter 3 Electrical Installation

3.1 Typical System Connection

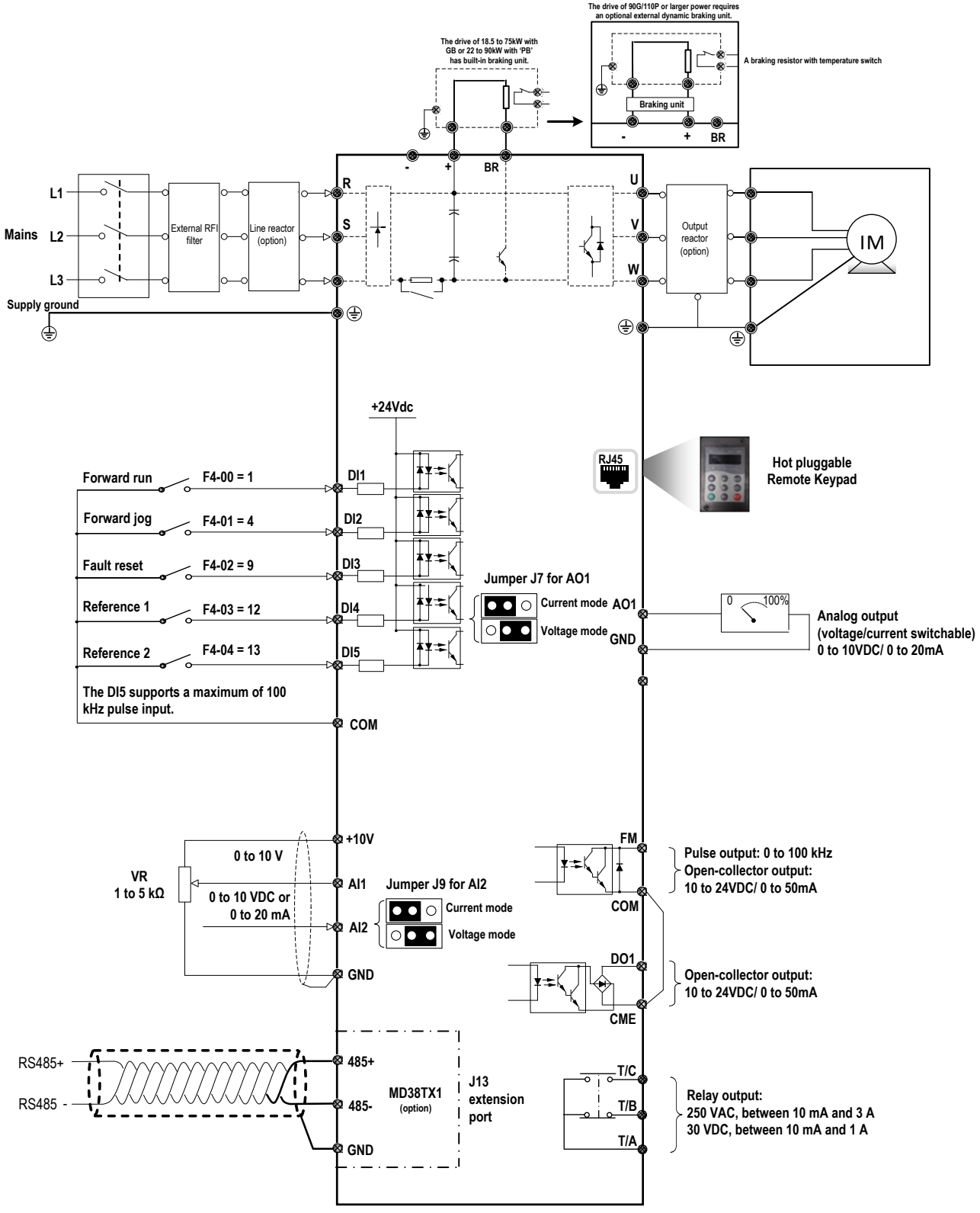

3.2 Main Circuit Wiring

3.2.1 Main Circuit Terminals

■ Terminal Arrangement

MD29018.5G/22P to MD29037G/45P

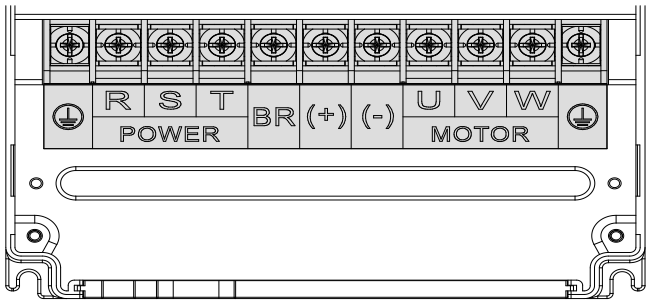

MD290T45G/55P to MD290132G/160P

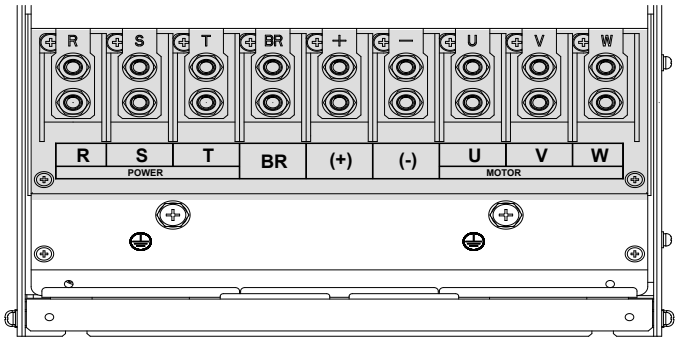

MD290T200G to MD290T450G and MD290T220P to MD290T500P

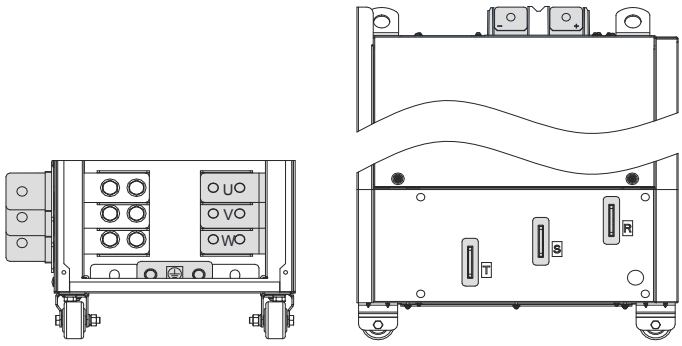

■ Terminal Function

Table 3-1 Description of input and output connections of the drive

Terminal	Name	Description
R, S, T	Three-phase supply input	Connected to three-phase power supply.
(+), (-)	DC bus terminals	Connected to external braking unit (MDBUN) with AC drive units of 90 kW and above.
(+), BR	Braking resistor connection	Connected to external braking resistor for AC drive units of 75 kW and below.
U, V, W	AC drive outputs	Connected to a three-phase motor.
⏚	Ground (PE)	Grounding connection.

■ Cable Dimensions and Tightening Torque

Note	
	• Data and models recommended in this section are for reference only. The user selected cable diameter must not be larger than the terminal width in the following figures. • Selection of IEC cables is based on: – Standards EN 60204-1 and IEC 60364-5-52 – PVC insulation – 40°C ambient temperature and 70°C surface temperature – Symmetrical cable with copper mesh shield – A maximum of 9 cables are allowed in a cable tray. • For North America, the recommended cables in the preceding table must be copper wires rated 600 V, 75°C.

Figure 3-1 Terminal dimensions of MD290T18.5G/22P and MD290T22G/30P

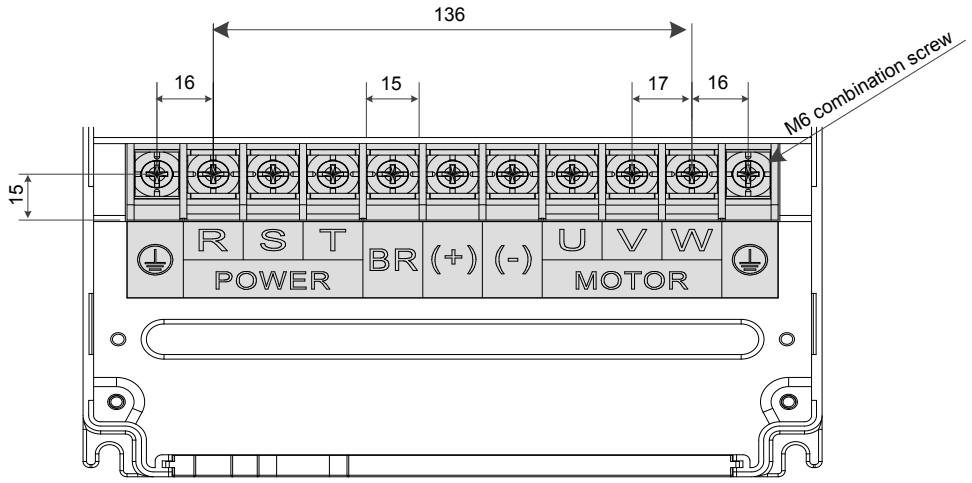

Table 3-2 Recommended cable dimensions and tightening torque of MD290T18.5G/22P and MD290T22G/30P

AC Drive Model	Rated Input Current (A)	Power Input/ Output Cable	Crimp Terminal Model	Ground Cable	Crimp Terminal Model	Tightening Torque (N·m)	Screw Spec.
MD290T18.5G	49.5	3 x 10 mm^2 3 x 6 AWG	8-6	10 mm^2 8 AWG	8-6	4.0	M6
MD290T22P	59	3 x 16 mm^2 3 x 4 AWG	14-6	16 mm^2 8 AWG	8-6	4.0	M6
MD290T22G	59	3 x 16 mm^2 3 x 4 AWG	14-6	16 mm^2 8 AWG	8-6	4.0	M6
MD290T30P	65.8	3 x 16 mm^2 3 x 4 AWG	14-6	16 mm^2 8 AWG	8-6	4.0	M6

Figure 3-2 Terminal dimensions of MD290T30G/37P and MD290T37G/45P

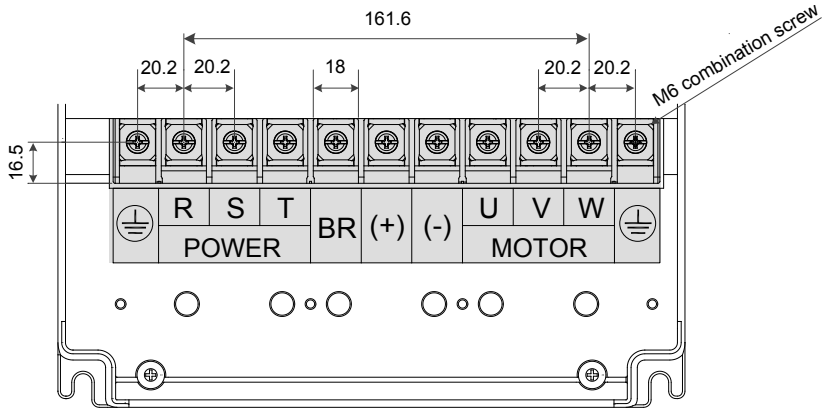

Table 3-3 Recommended cable dimensions and tightening torque of MD290T30GB/37P and MD290T37GB/45P

AC Drive Model	Rated Input Current (A)	Power Input/ Output Cable	Crimp Terminal Model	Ground Cable	Crimp Terminal Model	Tightening Torque (N·m)	Screw Spec.
MD290T30G	57	3 x 16 mm^2 3 x 4 AWG	14-L6	16 mm^2 8 AWG	8-6	4.0	M6
MD290T37P	71	3 x 16 mm^2 3 x 4 AWG	14-L6	16 mm^2 8 AWG	8-6	4.0	M6
MD290T37G	69	3 x 16 mm^2 3 x 4 AWG	14-L6	16 mm^2 8 AWG	8-6	4.0	M6
MD290T45P	86	3 x 25 mm^2 3 x 3 AWG	22-8	25 mm^2 6 AWG	14-8	4.0	M6

Figure 3-3 Terminal dimensions of MD290T45G/55P and MD290T55G/75P

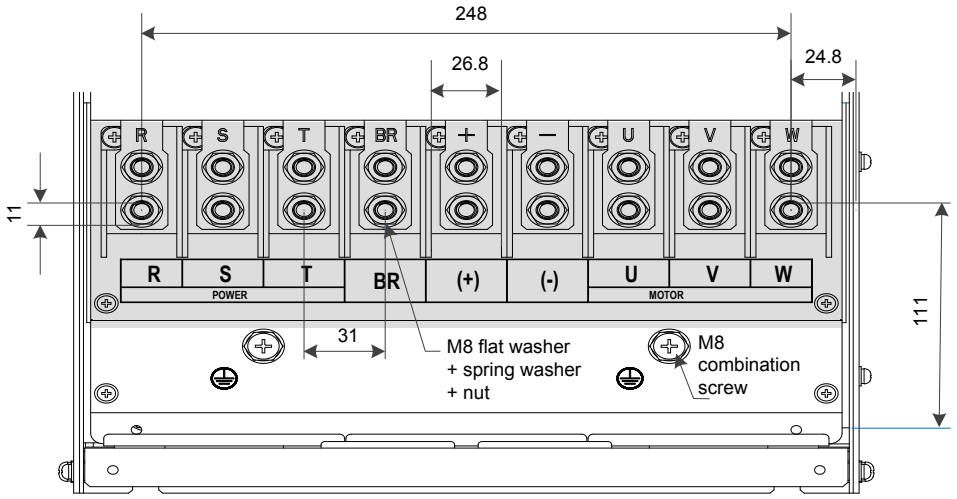

3

Table 3-4 Recommended cable dimensions and tightening torque of MD290T45G/55P and MD290T55G/75P

AC Drive Model	Rated Input Current (A)	Power Input/ Output Cable	Crimp Terminal Model	Ground Cable	Crimp Terminal Model	Tightening Torque (N·m)	Screw Spec.
MD290T45G	89	3 x 35 mm^2 3 x 2 AWG	22-8	25 mm^2 6 AWG	14-8	10.5	M8
MD290T55P	111	3 x 50 mm^2 3 x 1/0 AWG	60-8	25 mm^2 6 AWG	14-8	10.5	M8
MD290T55G	106	3 x 50 mm^2 3 x 1/0 AWG	60-8	25 mm^2 6 AWG	14-8	10.5	M8
MD290T75P	143	3 x 70 mm^2 3 x 2/0 AWG	70-12	35 mm^2 4 AWG	22-12	10.5	M12

www.Farazcontrol.com واحد فروش: ۰۹۱۲۹۲۷۵۱۵۹ (مهندس رمضان زاده)

Figure 3-4 Terminal dimensions of MD290T75G/90P to MD290T110G/132P

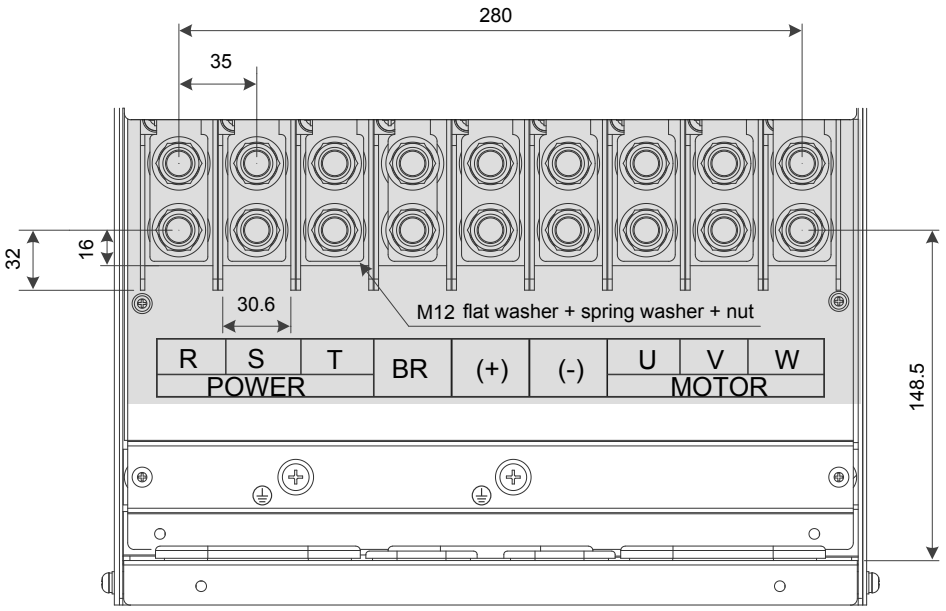

Table 3-5 Recommended cable dimensions and tightening torque of MD290T75G/90P to MD290T110G/132P

AC Drive Model	Rated Input Current (A)	Input/Output Power Cable	Crimp Terminal Model	Ground Cable	Crimp Terminal Model	Tightening Torque (N·m)	Screw Spec.
MD290T75G	139	3 x 70 mm^2 3 x 2/0 AWG	70-12	35 mm^2 4 AWG	22-12	35.0	M12
MD290T90P	167	3 x 95 mm^2 3 x 3/0 AWG	80-12	50 mm^2 4 AWG	22-12	35.0	M12
MD290T90G	164	3 x 95 mm^2 3 x 3/0 AWG	80-12	50 mm^2 4 AWG	22-12	35.0	M12
MD290T110P	198	3 x 120 mm^2 3 x 4/0 AWGl	100-12	70 mm^2 3 AWG	38-12	35.0	M12
MD290T110G	196	3 x 120 mm^2 3 x 4/0 AWGl	100-12	70 mm^2 3 AWG	38-12	35.0	M12
MD290T132P	239	3 x 150 mm^2 350 kcmil	150-12	95 mm^2 2 AWG	38-12	35.0	M12

www.Farazcontrol.com واحد فروش: ۰۹۱۲۹۲۷۵۱۵۹ (مهندس رمضان زاده)

Figure 3-5 Terminal dimensions of MD290T132G/160P and MD290T160G/200P

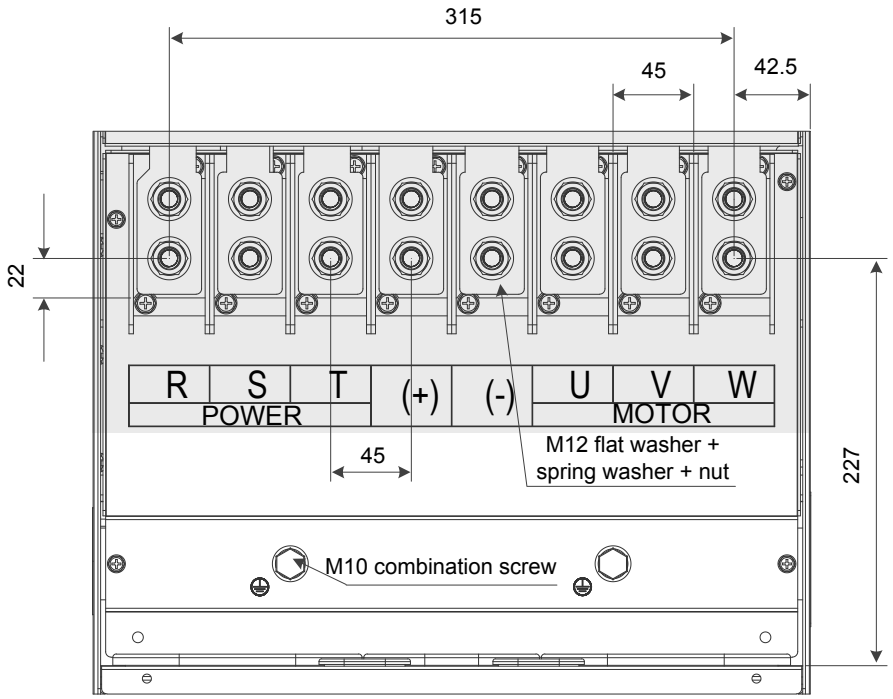

Table 3-6 Recommended cable dimensions and tightening torque of MD290T132G/160P and MD290T160G/200P

AC Drive Model	Rated Input Current (A)	Power Input/ Output Cable	Crimp Terminal Model	Ground Cable	Crimp Terminal Model	Tightening Torque (N·m)	Screw Spec.
MD290T132G	240	3 x 150 mm^2 300 kcmil	150-12	95 mm^2 2 AWG	38-12	35.0	M12
MD290T160P	295	3 x 185 mm^2 300 kcmil	250-12	95 mm^2 2 AWG	38-12	35.0	M12
MD290T160G	287	3 x 185 mm^2 350 kcmil	250-12	95 mm^2 2 AWG	38-12	35.0	M12
MD290T200P	359	3 x 240 mm^2 400 kcmil	325-12	120 mm^2 1/0 AWG	38-12	35.0	M12

www.Farazcontrol.com واحد فروش: ۰۹۱۲۹۲۷۵۱۵۹ (مهندس رمضان زاده)

Figure 3-6 Terminal dimensions of MD290T200G, MD290T220G, and MD290T220P to MD290T280P (without output reactor)

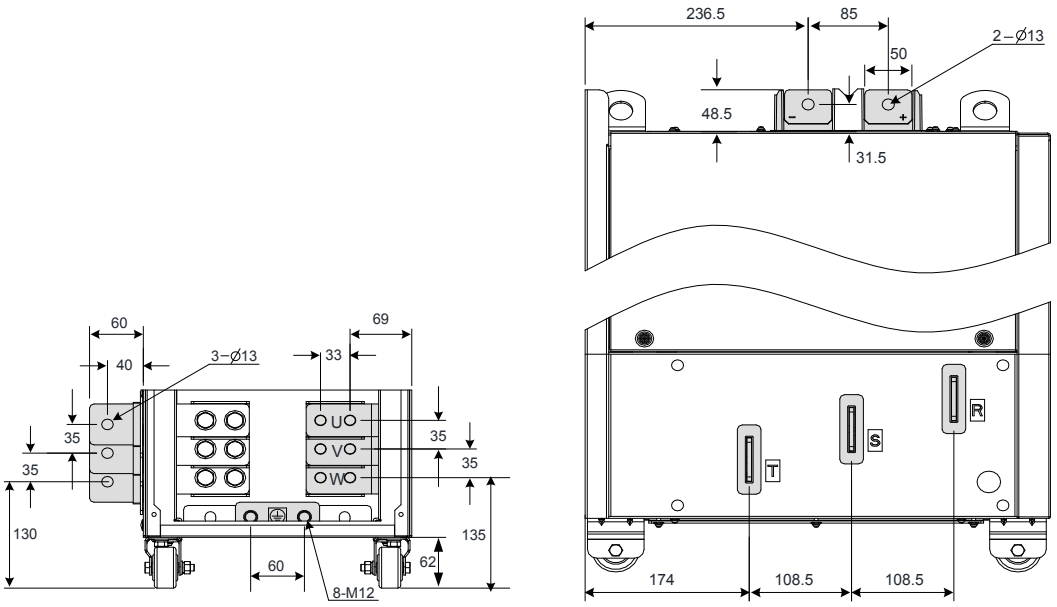

Figure 3-7 Terminal dimensions of MD290T200G-L, MD290T220G-L and MD290T220P-L to MD290280P-L (with output reactor)

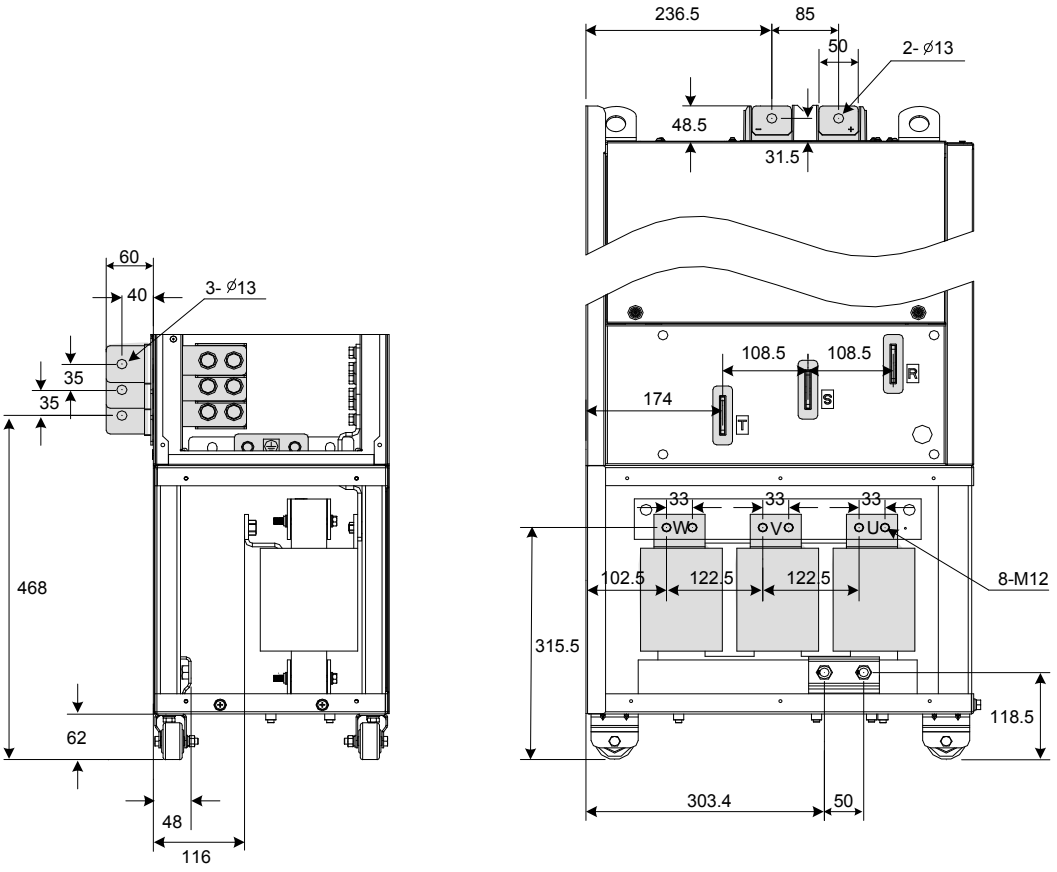

www.Farazcontrol.com واحد فروش: ۰۹۱۲۹۲۷۵۱۵۹ (مهندس رمضان زاده)

In *Figure 3-7*, the side entry copper bar can be removed if necessary. Dimensions of main circuit terminals without side entry copper bar are shown below.

Figure 3-8 Terminal dimensions of MD290T200G-L, MD290T220G-L and MD290T220P-L to MD290T280P-L (without side entry copper bar, without output reactor)

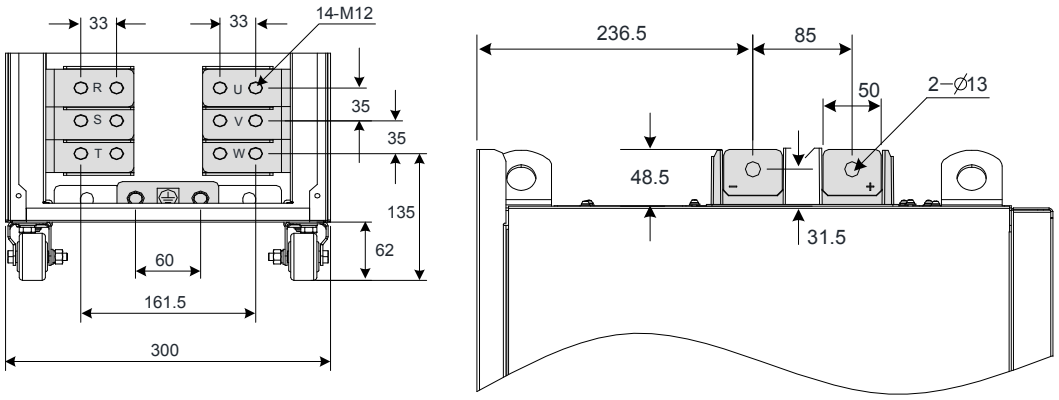

3

Table 3-7 Recommended cable dimensions and tightening torque of MD290T200G(-L), MD290T220G(-L) and MD290T220P(-L) to MD290T280P(-L)

AC Drive Model	Rated Input Current (A)	Power Input/ Output Cable	Crimp Terminal Model	Ground Cable	Crimp Terminal Model	Tightening Torque (N·m)	Screw Spec.
MD290T200G(-L)	365	2 x (3 x 95) mm^2 4/0 AWG x 2P	100-12	95 mm^2 1 AWG	60-12	35.0	M12
MD290T220P(-L)	410	2 x (3 x 120) mm^2 300 kcmil x 2P	150-12	120 mm^2 1/0 AWG	60-12	35.0	M12
MD290T250P(-L)	456	2 x (3 x 120) mm^2 300 kcmil x 2P	150-12	120 mm^2 1/0 AWG	60-12	35.0	M12
MD290T220G(-L)	410	2 x (3 x 120) mm^2 300 kcmil x 2P	150-12	120 mm^2 1/0 AWG	60-12	35.0	M12
MD290T280P(-L)	507	2 x (3 x 150) mm^2 400 kcmil x 2P	200-12	150 mm^2 1/0 AWG	60-12	35.0	M12

www.Farazcontrol.com واحد فروش: ۰۹۱۲۹۲۷۵۱۵۹ (مهندس رمضان زاده)

Figure 3-9 Terminal dimensions of MD290T250G, MD290T280G, MD290T315P and MD290T355P (without output reactor)

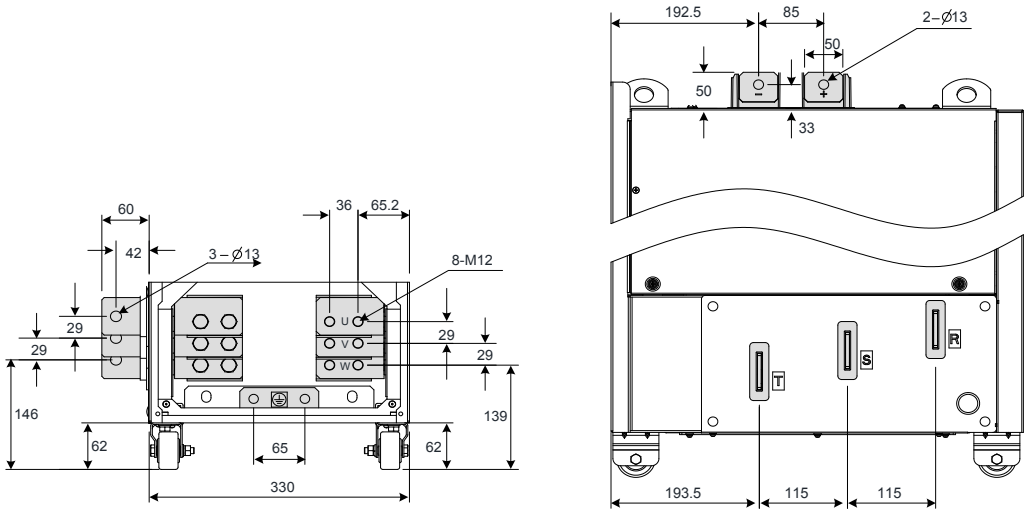

Figure 3-10 Terminal dimensions of MD290T250G-L, MD290T280G-L, MD290T315P-L and MD290T355P-L (with output reactor)

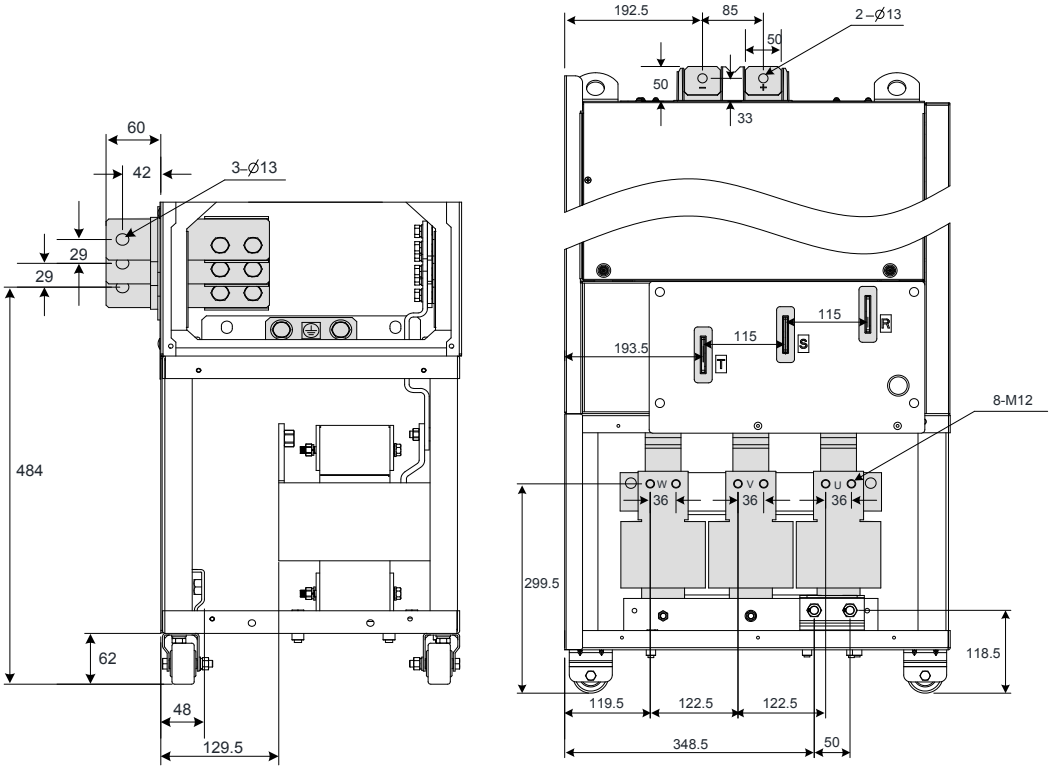

In *Figure 3-10*, the side entry copper bar can be removed if necessary. Terminal dimensions of main circuit terminals without side entry copper bar are shown below.

www.Farazcontrol.com واحد فروش: ۰۹۱۲۹۲۷۵۱۵۹ (مهندس رمضان زاده)

Figure 3-11 Terminal dimensions of MMD290T250G-L, MD290T280G-L, MD290T315P-L and MD290T355P-L (without side entry copper bar, without output reactor)

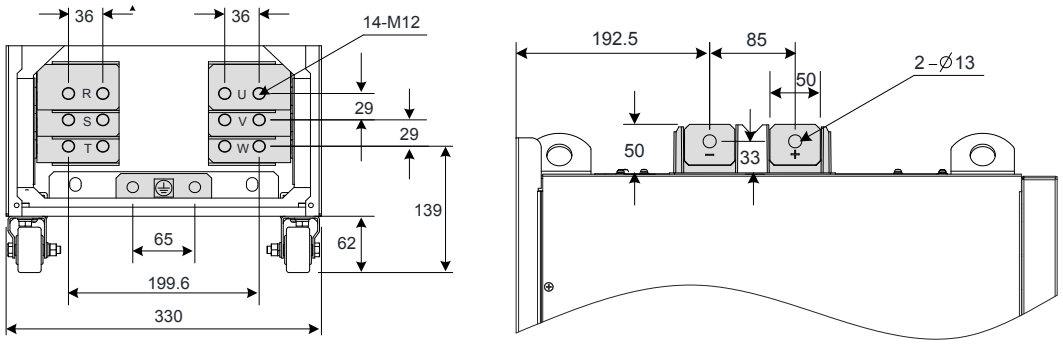

Table 3-8 Recommended cable dimensions and tightening torque of MD290T250G(-L), MD290T280G(-L), MD290T315P(-L) and MD290T355P(-L)

3

AC Drive Model	Rated Input Current (A)	Power Input/ Output Cable	Crimp Terminal Model	Ground Cable	Crimp Terminal Model	Tightening Torque (N·m)	Screw Spec.
MD290T250G(-L)	441	2 x (3 x 120) mm^2 300 kcmil x 2P	150-12	120 mm^2 1/0 AWG	60-12	35.0	M12
MD290T315P(-L)	559	2 x (3 x 185) mm^2 500 kcmil x 2P	250-16	185 mm^2 2/0 AWG	70-16	35.0	M12
MD290T280G(-L)	495	2 x (3 x 150) mm^2 400 kcmil x 2P	200-12	150 mm^2 1/0 AWG	60-12	35.0	M12
MD290T355P(-L)	624	2 x (3 x 185) mm^2 500 kcmil x 2P	250-16	185 mm^2 2/0 AWG	70-16	35.0	M12

Figure 3-12 Terminal dimensions of MD290T315G to MD290T450G and MD290T/400P to MD290T500P (without output reactor)

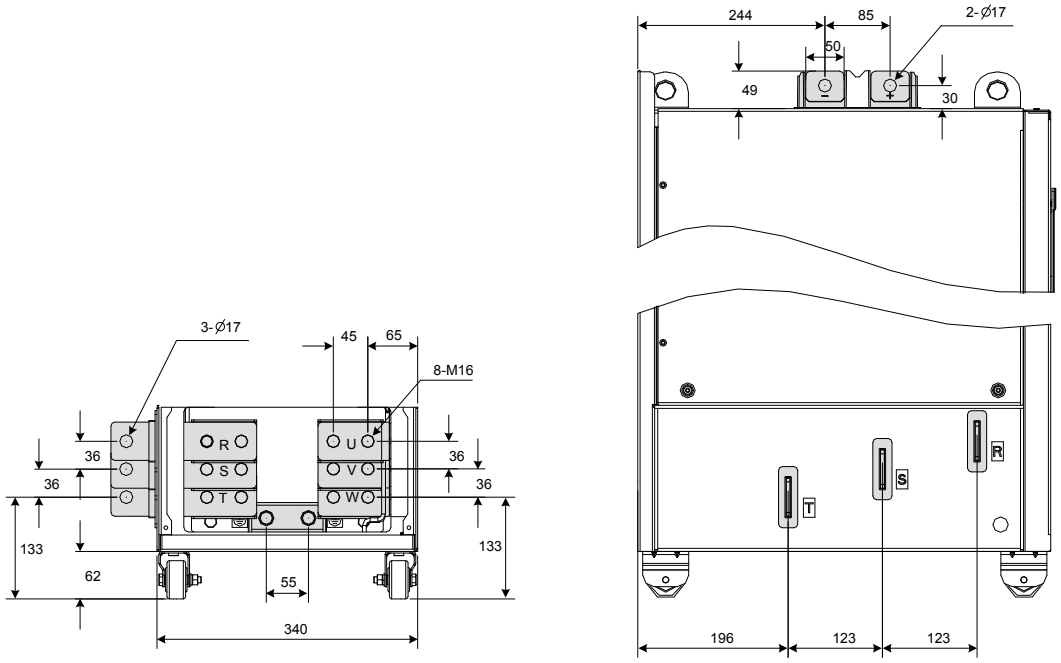

www.Farazcontrol.com واحد فروش: ۰۹۱۲۹۲۷۵۱۵۹ (مهندس رمضان زاده)

Figure 3-13 Terminal dimensions of MD290T315G-L to MD290T450G-L and MD290T400P-L to MD290T500P-L (with output reactor)

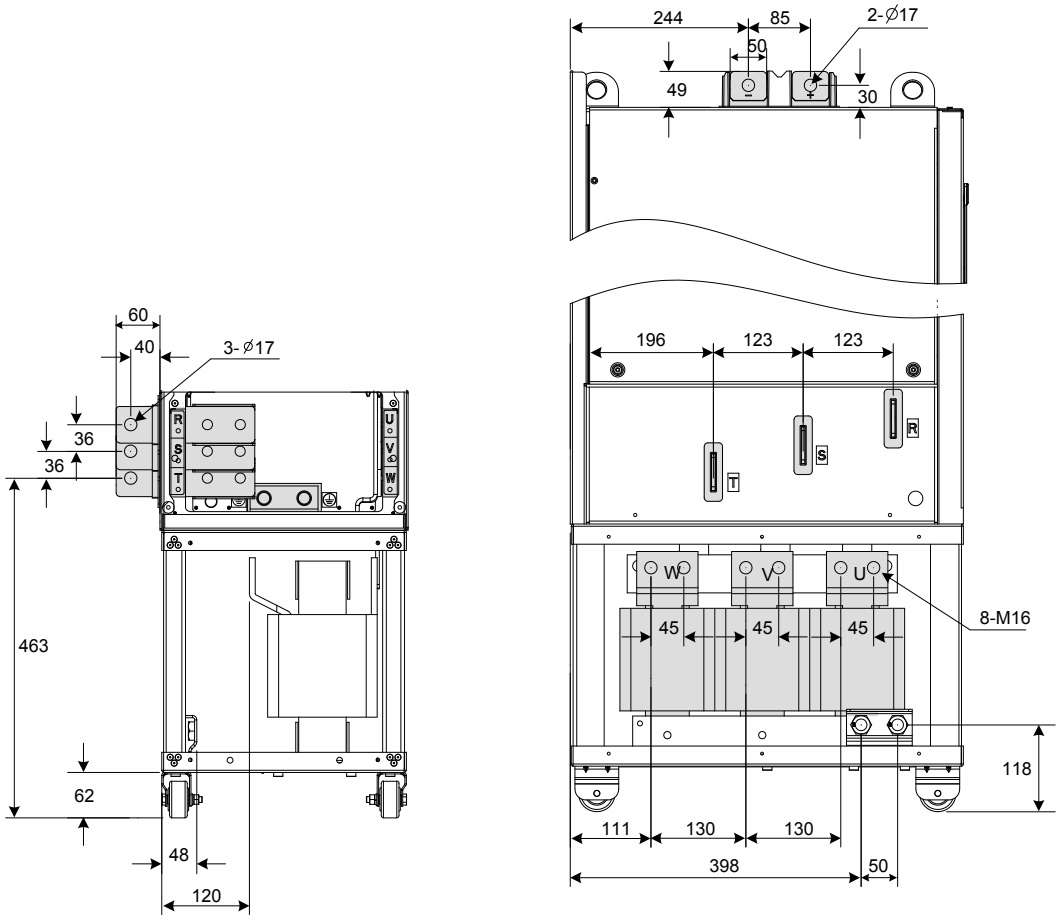

In Figure 3-13, the side entry copper bar can be removed if necessary. Terminal dimensions of main circuit terminals without side entry copper bar are shown below.

www.Farazcontrol.com واحد فروش: ۰۹۱۲۹۲۷۵۱۵۹ (مهندس رمضان زاده)

Figure 3-14 Terminal dimensions of MD290T315G to MD290T450G and MD290T400P to MD290500P (without side entry copper bar, without output reactor)

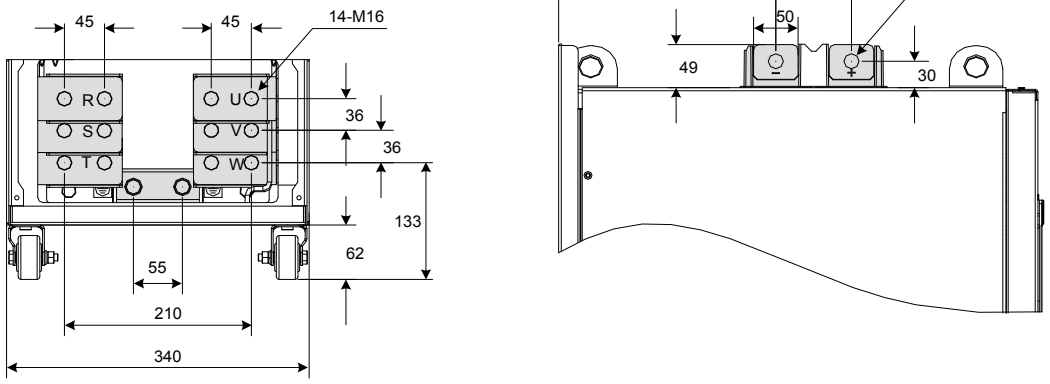

Table 3-9 Recommended cable dimensions and tightening torque of MD290T315G(-L) to MD290T450G(-L) and MD290400P(-L) to MD290500P(-L)

AC Drive Model	Rated Input Current (A)	Power Input/ Output Cable	Crimp Terminal Model	Ground Cable	Crimp Terminal Model	Tightening Torque (N·m)	Screw Spec.
MD290T315G(-L)	565	2 x (3 x 185) mm^2 500 kcmil x 2P	250-16	185 mm^2 2/0 AWG	70-16	85.0	M16
MD290T400P(-L)	708	2 x (3 x 240) mm^2 600 kcmil x 2P	325-16	240 mm^2 3/0 AWG	80-16	85.0	M16
MD290T355G(-L)	617	2 x (3 x 185) mm^2 500 kcmil x 2P	250-16	185 mm^2 2/0 AWG	70-16	85.0	M16
MD290T450P(-L)	782	2 x (3 x 240) mm^2 600 kcmil x 2P	325-16	240 mm^2 3/0 AWG	80-16	85.0	M16
MD290T400G(-L)	687	2 x (3 x 240) mm^2 600 kcmil x 2P	325-16	240 mm^2 3/0 AWG	80-16	85.0	M16
MD290T500P(-L)	840	2 x (3 x 300) mm^2 650 kcmil x 2P	325-16	300 mm^2	80-16	85.0	M16
MD290T450G(-L)	782	2 x (3 x 240) mm^2 600 kcmil x 2P	325-16	240 mm^2 3/0 AWG	80-16	85.0	M16

www.Farazcontrol.com واحد فروش: ۰۹۱۲۹۲۷۵۱۵۹ (مهندس رمضان زاده)

■ Crimp Terminal Recommendation

The user can select crimp terminal in the local market according to dimensions in the table below (For North America, the crimp terminal selected must comply with the UL certification).



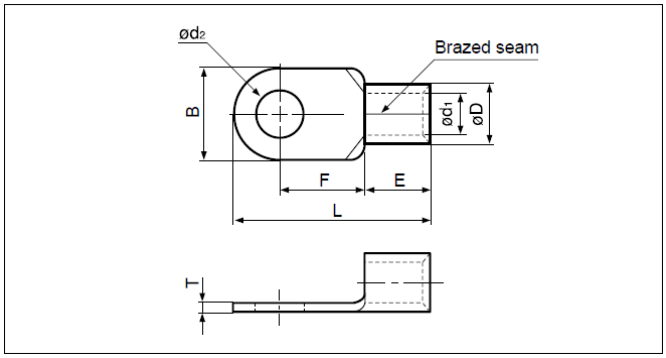

Table 3-10 Models and dimensions of the JST crimp terminal above

Model	Dimensions (mm)								Crimping Tool No.
	d2 (Min.)	B (Max.)	L	F	E	D	d1	T	
8-6	6.4	12.0	23.8	9.3	8.5	7.1	4.5	1.2	YA-4
14-6	6.4	12.0	29.8	13.3	10.5	9.0	5.8	1.5	YA-4
14-L6	6.4	16.0	32.8	14.5	10.5	9.0	5.8	1.5	YA-4
14-8	8.4	16.0	32.8	14.5	10.5	9.0	5.8	1.5	YA-4
22-8	8.4	16.5	33.7	13.5	12.0	11.5	7.7	1.8	YA-5
22-12	13.0	22.0	42.5	19.5	12.0	11.5	7.7	1.8	YA-5



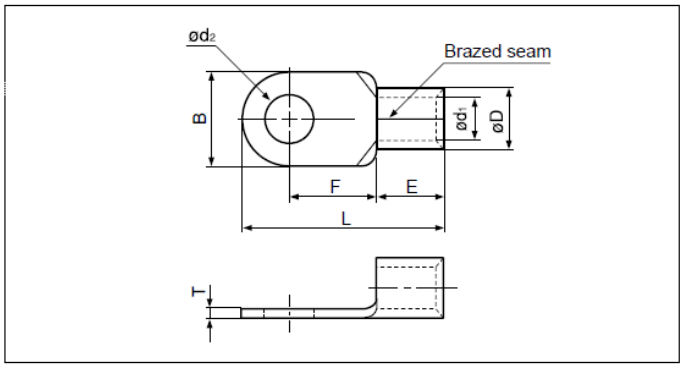

Table 3-11 Models and dimensions of the JST crimp terminal above

Model	Dimensions (mm)								Crimping Tool No.
	d2 (Min.)	B (Max.)	L	F	E	D	d1	T	
38-12	13.0	22.0	42.7	17.7	14.0	13.3	9.4	1.8	YA-5
60-8	8.4	22.0	49.7	20.7	18.0	15.5	11.4	2.0	YA-5
70-12	13.0	24.0	51.0	20.0	19.0	17.5	13.3	2.0	YPT-150-1
80-12	13.0	27.0	54.2	20.7	20.0	19.5	14.5	2.3	YPT-150-1
100-12	13.0	28.5	55.6	20.4	21.0	22.3	16.4	2.6	YPT-150-1

www.Farazcontrol.com واحد فروش: ۰۹۱۲۹۲۷۵۱۵۹ (مهندس رمضان زاده)



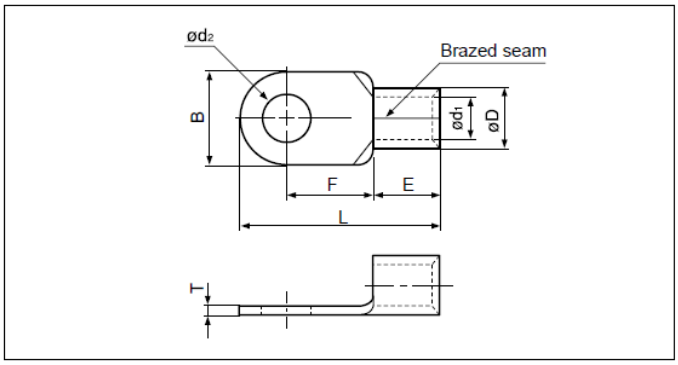

Table 3-12 Models and dimensions of the JST crimp terminal above

Model	Dimensions (mm)								Crimping Tool No.
	d2 (Min.)	B (Max.)	L	F	E	D	d1	T	
150-12	13.0	36.0	66.0	23.0	27.0	26.5	19.5	3.2	YPT-150-1
250-12	13.0	44.0	78.0	24.5	31.5	35.6	26.0	4.5	YF-1, YET-300-1
250-12	13.0	44.0	78.0	24.5	31.5	35.6	26.0	4.5	YF-1, YET-300-1
250-16	17.0	44.0	78.0	24.5	31.5	35.6	26.0	4.5	YF-1, YET-300-1
325-16	17.0	50.5	88.0	33.5	35.5	37.6	28.0	4.5	YF-1, YET-300-1

3

3.2.2 Main Circuit Cable Recommendations

■ Main Circuit Cable Selection

Inovance recommends symmetrical shielded cable as main circuit cable, which can reduce electromagnetic radiation of entire conductive system compared with four-conductor cable

Figure 3-15 Symmetrical shielded cable is recommended

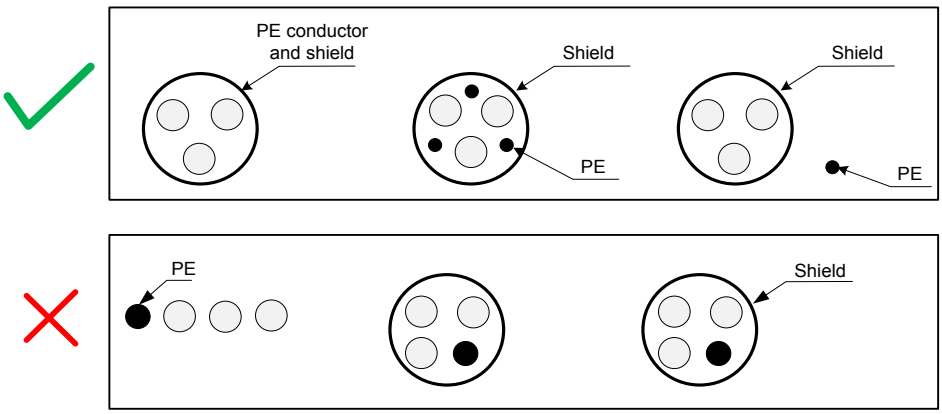

www.Farazcontrol.com واحد فروش: ۰۹۱۲۹۲۷۵۱۵۹ (مهندس رمضان زاده)

■ Power Input

- There are no phase sequence requirements for three-phase cable connections.
- Specification and installation of all external power cables must comply with local safety regulations and relevant IEC standards.
- Install filter close to power input side of the AC drive with cable shorter than 30 cm. Connect the ground terminal of filter and the ground terminal of the drive together to the cabinet main grounding terminal.

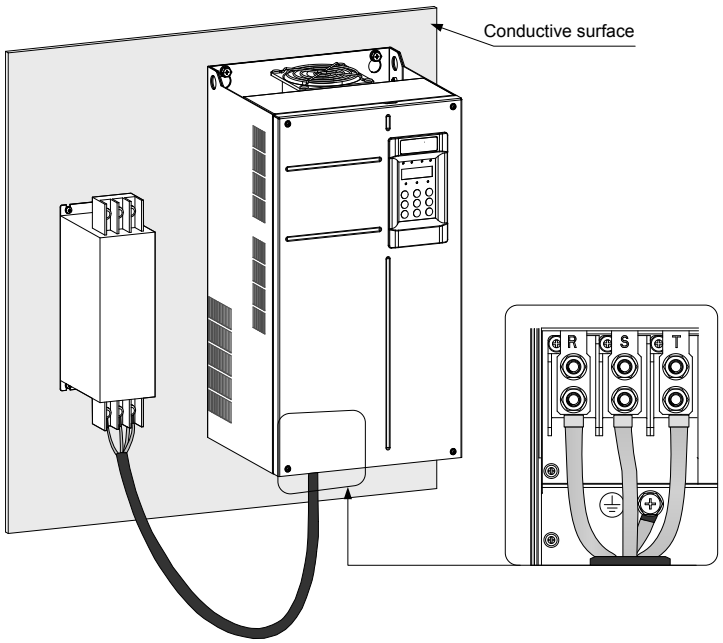

■ DC Bus Terminals

WARNING

- DC bus terminals, labeled (+) and (-), are terminals that carry a residual voltage for a period after the drive has been switched off.
- To avoid risk of equipment damage or fire, when you select an external braking unit for use with an AC drive of 90 kW and above, **DO NOT reverse the poles (+) and (–)**.
- Use a cable not exceeding10 m to connect DC bus terminals to external MDBUN braking unit. Use twisted pair wires or close pair wires for this connection.
- Fire risk! Do not connect braking resistor directly to DC bus.

www.Farazcontrol.com واحد فروش: ۰۹۱۲۹۲۷۵۱۵۹ (مهندس رمضان زاده)

■ Braking Resistor

CAUTION

- Fire risk! Fit overtemperature sensors or thermal overload relay to the braking resistor, and use double insulated cables for the dynamic brake circuit to the brake resistors.
- Braking resistor terminals (+) and PB are only for the drive units up to 75 kW that are fitted with an internal braking unit.
- To avoid risk of equipment damage, use a cable not exceeding 5 m to connect an external braking resistor.
- To avoid risk of ignition due to overheating of the braking resistor, do not place anything combustible around the braking resistor.
- Set F6-15 (Braking use ratio) and F9-08 (Braking unit action initial voltage) correctly according to load after connecting braking resistor to the drive of up to 75 kW that is fitted with an internal braking unit.

■ AC Drive Outputs U, V, W to Motor

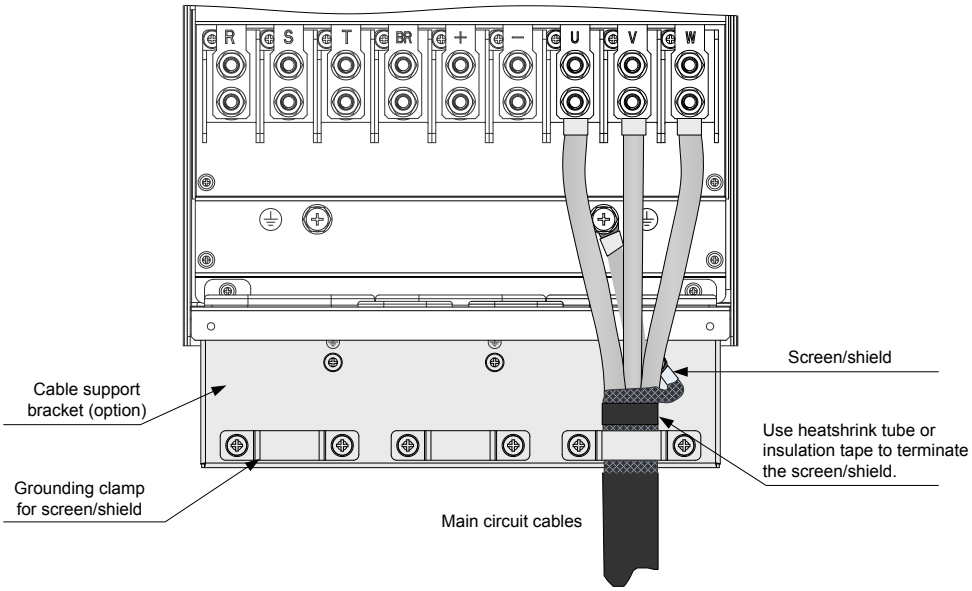

www.Farazcontrol.com واحد فروش: ۰۹۱۲۹۲۷۵۱۵۹ (مهندس رمضان زاده)

The Cable Support Bracket is an optional accessory which provides mechanical support for input, output and dynamic brake cables and which also provides grounding clamps for the screen/shield of the cables. Installation of the bracket is shown below.

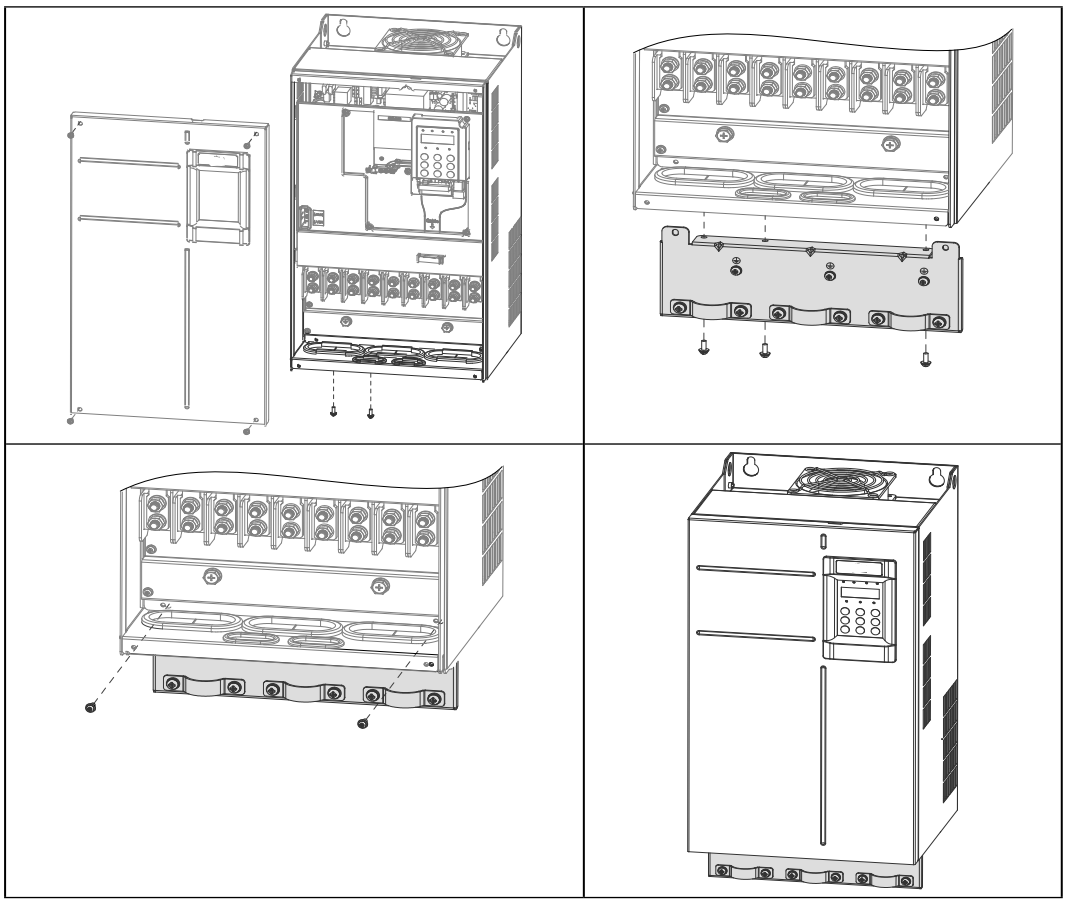

Table 3-13 Cable support bracket models

Cable Support Bracket Model	Applicable Drive Model
MD500-AZJ-A2T5	MD290T18.5G/22P
	MD290T22G/30P
MD500-AZJ-A2T6	MD290T30G/37P
	MD290T37G/45P
MD500-AZJ-A2T7	MD290T45G/55P
	MD290T55G/75P
MD500-AZJ-A2T8	MD290T75G/90P
	MD290T90G/110P
	MD290T110G/132P
MD500-AZJ-A2T9	MD290T132G/160P
	MD290T160G/200P

www.Farazcontrol.com واحد فروش: ۰۹۱۲۹۲۷۵۱۵۹ (مهندس رمضان زاده)

- Cable specification and installation of all cables connected to the drive output U, V, W must comply with local safety regulations and relevant IEC standards.
- To avoid risk of equipment damage or operating faults, do not connect capacitor or surge absorber to the output side of the AC drive.
- Long motor cables can contribute to electrical resonance caused by distributed capacitance and inductance. In some cases, this might cause equipment damage in the drive, in motor or in cables. To avoid these problems, install an AC output reactor close to the drive if cable is longer than about 100 m.
- If the cable support bracket is not used, screen/shield has to be directly grounded to the grounding (PE) terminal. Ensure pig tail of screen/shield is as short as possible.

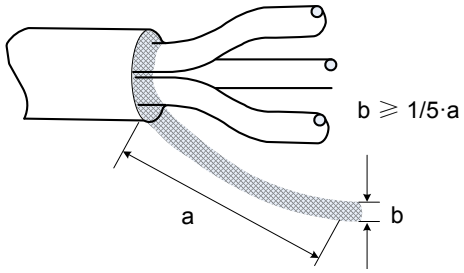

■ Grounding (PE) Connection

WARNING

Electrical Shock Hazard. Ensure the protective earthing conductor complies with technical standards and local safety regulations. Because the leakage current exceeds 3.5 mA in all models, IEC 61800-5-1 states that either the power supply must be automatically disconnected in case of discontinuity of the protective earthing conductor or a protective earthing conductor with a cross-section of at least 10 mm^2 (Cu) or 16 mm^2 (Al) must be used. Failure to comply may result in death or serious injury.

- For personal safety and reliability of the equipment, it is important to connect ground (PE) terminal to an effective electrical ground. Resistance value of the ground cable must be less than 10 Ω.
- Do not connect the grounding (PE) terminal of the drive to neutral conductor of the power system.
- Protective grounding conductor must be able to carry large short-term current that might arise if a fault occurs.
- Use proper grounding cable with yellow/green insulation for protective grounding conductor.
- Ground the shield.
- It is recommended that the drive be installed on a metal mounting surface.
- Install filter and drive on the same mounting surface and ensure filtering effect.

www.Farazcontrol.com واحد فروش: ۰۹۱۲۹۲۷۵۱۵۹ (مهندس رمضان زاده)

■ Main Circuit Cable Protection

Add heat shrink tube to cable lug cooper tube and cable core part of main circuit cable and ensure the heat shrink tube completely covers the cable conductor part, as shown in the following figure.

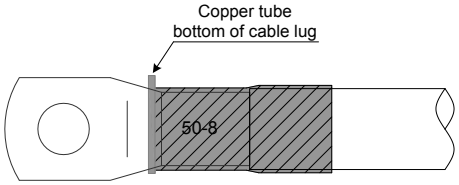

■ Power Input Protection

- Install protection devices (a fuse and a MCCB) at power input to the drive. The protection devices must provide protection on overcurrent and short-circuit, and be able to completely isolate the drive from the electrical power input.
- Cables and protection device on power input must be suitably rated for the power and voltage class of the drive under normal conditions, and under possible fault conditions such as system overload and short-circuit on the power input.

■ Power Grid System

- The drive is applicable to system with neutral point grounded.

WARNING

If the drive is used in an IT power system with an ungrounded power system or a high resistance grounded [over 30 ohms] power system, it is necessary to remove both VDR and EMC jumper screws as shown in Figure 3-11. Do not install a filter. Failure to comply may result in personal injury or damage to the drive.

- If a residual-current device (RCD) is used and it trips at start, remove the EMC jumper screw as shown in Figure 3-11.

Figure 3-16 EMC jumper screw and VDR jumper screw

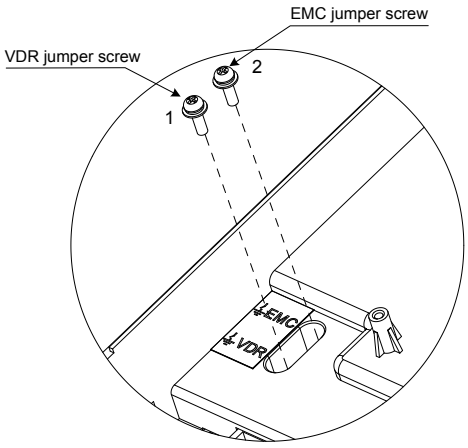

www.Farazcontrol.com واحد فروش: ۰۹۱۲۹۲۷۵۱۵۹ (مهندس رمضان زاده)

3.3 Control Circuit Wiring

3.3.1 Control Circuit Terminals

■ Terminal Arrangement

Figure 3-17 Control circuit terminal arrangement

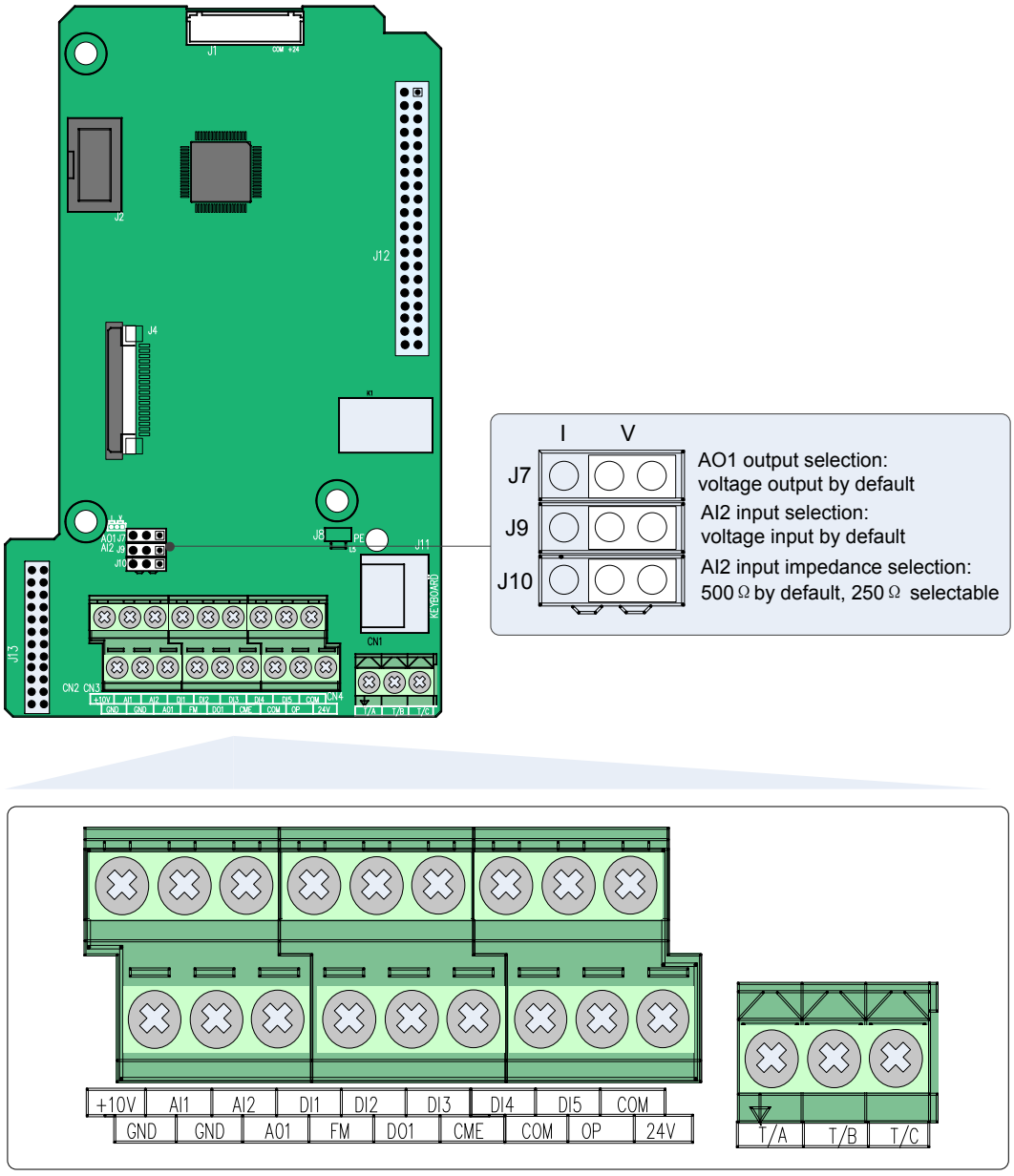

www.Farazcontrol.com واحد فروش: ۰۹۱۲۹۲۷۵۱۵۹ (مهندس رمضان زاده)

■ Terminal Function

Type	Terminal		Name	Description
Power supply	+10V	GND	+10 V power supply	Provides +10 V power supply to an external unit. Generally used to supply an external potentiometer of 1 to 5 kΩ Max. output current: 10 mA
	+24V	COM	+24 V power supply	Provides +24 V power supply to an external unit. Generally used to supply the DI/DO terminals and external sensors Max. output current: 170 mA
	OP		Input terminal for external power supply	Connected to +24 V by default. When DI1 to DI5 need to be driven by external signals, OP must be disconnected from + 24 V and connected to an external power supply.
Analog inputs	AI1	GND	Analog input 1	Voltage range of inputs: 0 to 10 VDC Input impedance: 22 kΩ
	AI2	GND	Analog input 2	Either a voltage or a current input, determined by jumper J9 Input voltage range: 0 to 10 VDC Input current range: 0 to 20 mA Input impedance: 22 kΩ (voltage input), 500 Ω or 250 Ω (current input) decided by J10<1>
Digital inputs	DI1	OP	Digital input 1	Optically-coupled isolation compatible with dual-polarity inputs Input impedance: 1.39 kΩ Voltage range for inputs: 9 to 30 V
	DI2	OP	Digital input 2	
	DI3	OP	Digital input 3	
	DI4	OP	Digital input 4	
	DI5	OP	High-speed pulse input	In addition to having the same features as DI1 to DI4, DI5 can also be used for high-speed pulse inputs. Max. input frequency: 100 kHz Input impedance: 1.03 kΩ
Analog output	AO1	GND	Analog output 1	Either a voltage or a current output, determined by jumper J7. Output voltage range: 0 to 10 V Output current range: 0 to 20 mA.

www.Farazcontrol.com واحد فروش: ۰۹۱۲۹۲۷۵۱۵۹ (مهندس رمضان زاده)

Type	Terminal		Name	Description
Digital outputs	DO1	CME	Digital output 1	Optically-coupled isolation, dual-polarity open-collector output Output voltage range: 0 to 24 V Output current range: 0 to 50 mA. Note that CME and COM are internally insulated, but are shorted externally by a jumper. In this case, DO1 is driven by +24 V by default. Remove the jumper link if you need to apply external power to DO1.
	FM	COM	High-speed pulse output	Controlled by F5-00 (FM terminal output selection). Max. output frequency: 100 kHz. When used as an open-collector output, the specification is the same as for DO1.
Relay outputs	T/A	T/B	Normally-closed (NC) terminal	Contact driving capacity: 250 VAC, 3 A, Cos f = 0.4 30 VDC, 1 A Applies to overvoltage Category II circuit
	T/A	T/C	Normally-open (NO) terminal	
Auxiliary interfaces	J13		Extension card interface	Interface for the 28-core terminal and optional cards (I/O extension card, PLC card and various bus cards)
	J11		External operating panel interface	Connected to an external operating panel.
Jumpers <2>	J7		AO1 output selection	Either a voltage or a current output, voltage output by default
	J9		AI2 input selection	Either a voltage or a current input, voltage input by default.
	J10		AI2 input impedance selection	Either 500 Ω or 250 Ω input, 500 Ω input by default

Note

- <1>: Select 500 Ω or 250 Ω input impedance according to with-load capacity of signal source. For example, if 500 Ω is selected, maximum output voltage of signal source must not be smaller than 10 V so that AI2 can measure 20 mA current.
- <2>: For positions of jumpers J7, J9 and J10, refer to *Figure 3-17*.

www.Farazcontrol.com واحد فروش: ۰۹۱۲۹۲۷۵۱۵۹ (مهندس رمضان زاده)

3.3.2 Wiring Diagrams

■ Selection of Control Circuit Wirings

All control wirings must be shielded.

For different analog signals, use independent shielded cables and do not use the same shield.

For digital signals, shielded twisted pair (STP) cable is recommended.

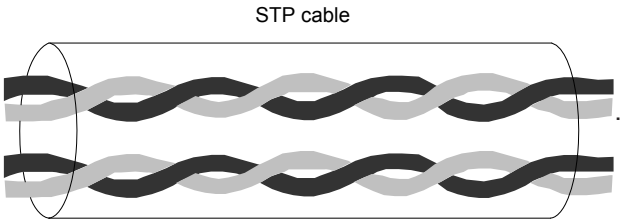

■ Cabling Requirements

- Motor cables must be segregated from control wiring to minimize electrical interference from the PWM effects of the motor cable.
- Do not run motor cables, power input cables and control wirings in the same duct to avoid electromagnetic interference caused by coupling of these cables.
- If control wiring must run across power cable, ensure they are arranged at an angle of 90°.

The recommended cabling diagram is as follows:

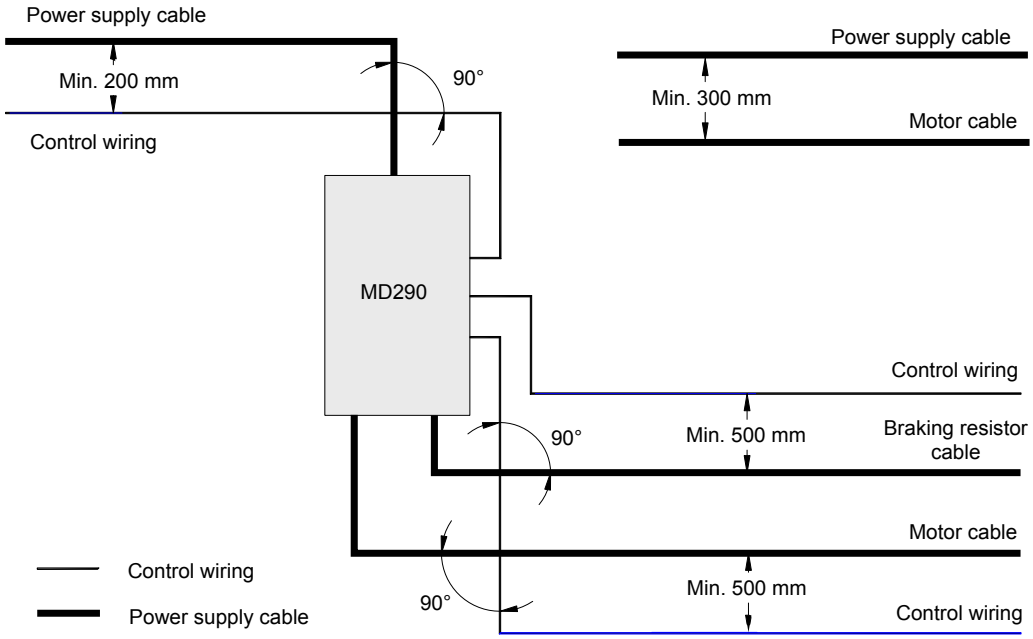

www.Farazcontrol.com واحد فروش: ۰۹۱۲۹۲۷۵۱۵۹ (مهندس رمضان زاده)

■ Wiring of AI1

Analog signals at low levels can suffer from effects of external interference. To reduce this effect, it is important to use shielded cables shorter than 20 m long to carry analog signals.

Figure 3-18 Wiring for analog input 1

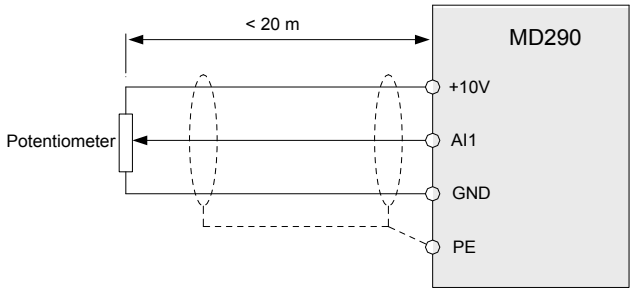

In applications where analog signals suffer from effects of severe external interference, install a filter capacitor or a ferrite magnetic core at source of analog signal. The pig tail of the shield must be connected to the PE terminal on the drive.

Figure 3-19 Connect shield to the PE terminal of the drive

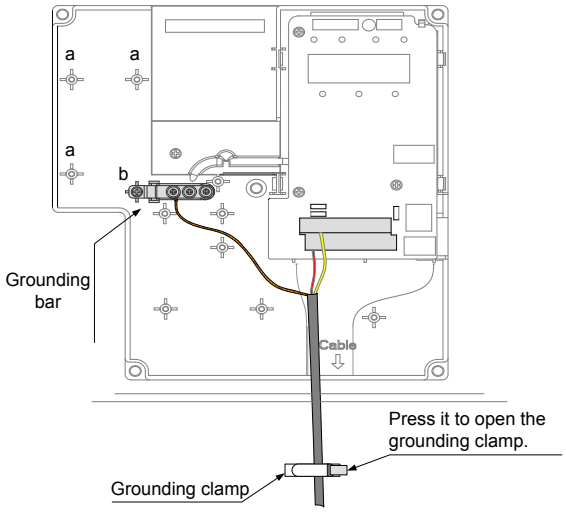

■ Wiring of AI2

When you select voltage input via AI2, use the same wiring method as AI1. When you select current input via AI2, set jumper J9 to the I side.

Figure 3-20 Wiring for analog input 2

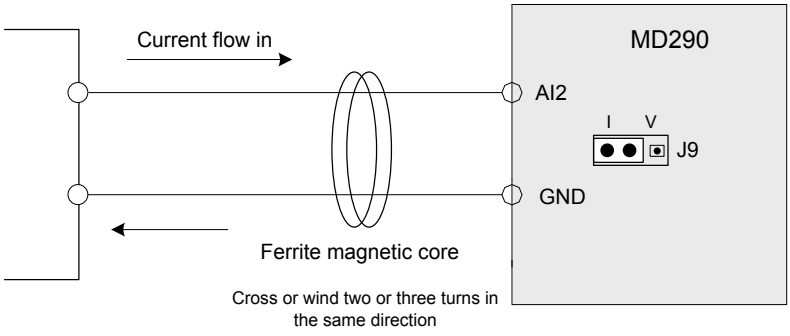

www.Farazcontrol.com واحد فروش: ۰۹۱۲۹۲۷۵۱۵۹ (مهندس رمضان زاده)

■ Wiring of DI1 to DI5

- SINK wiring

Figure 3-21 Wiring in SINK mode

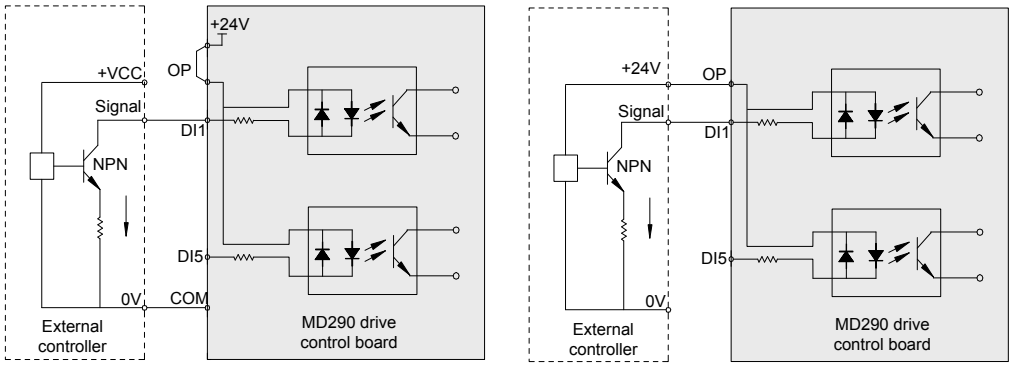

Internal 24 V power supply is applied.

External 24 V power supply is applied.

3

Applying internal 24 V power supply is the most commonly used wiring mode. In this mode, short terminals +24V and OP and connect COM to external power 0V.

To apply external 24V power supply, remove the jumper between terminals +24V and OP, and between terminals COM and CME. Connect positive side of external power 24V to OP, and external power 0V to corresponding DI terminal via contact on external controller.

CAUTION

In SINK mode, do not connect DI terminals of different AC drives in parallel, otherwise, a digital input fault will occur. If it is necessary to connect different AC drives in parallel, connect a diode in series at digital input. The diode characteristics must satisfy the following requirements:

- IF: > 40 mA
- VR: > 40 V

Figure 3-22 Parallel connection of DI terminals in SINK mode

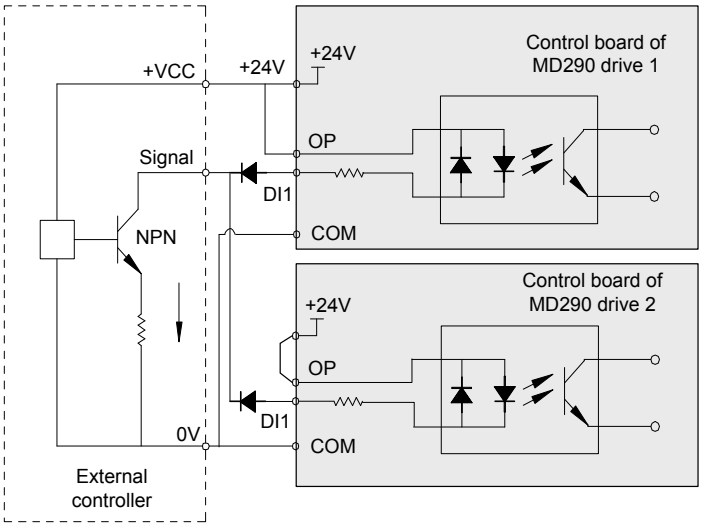

www.Farazcontrol.com واحد فروش: ۰۹۱۲۹۲۷۵۱۵۹ (مهندس رمضان زاده)

- Source wiring

Figure 3-23 Wiring in SOURCE mode

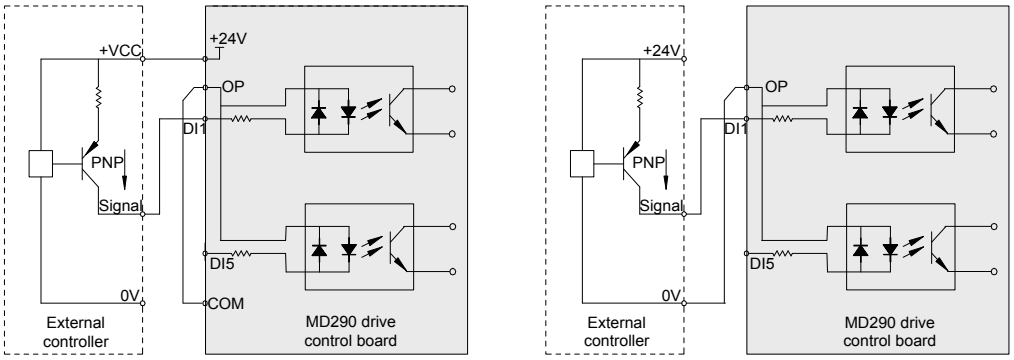

Internal 24 V power supply is applied.

External 24 V power supply is applied.

3

If you intend to use internal power supply of the drive, remove the jumper between terminals +24V and OP. Connect +24V to the common port of external controller, and connect terminal OP to terminal COM.

If you intend to use an external power supply, remove the jumper between terminals +24V and OP. Connect external power 0V to terminal OP, and the positive side of external power +24V to corresponding DI terminal via contact on external controller.

■ Wiring of DI5 (High-speed Pulse Input)

As high speed pulse input terminal, DI5 allows maximum frequency input of 100 kHz.

Figure 3-24 Wiring of high-speed pulse input terminal

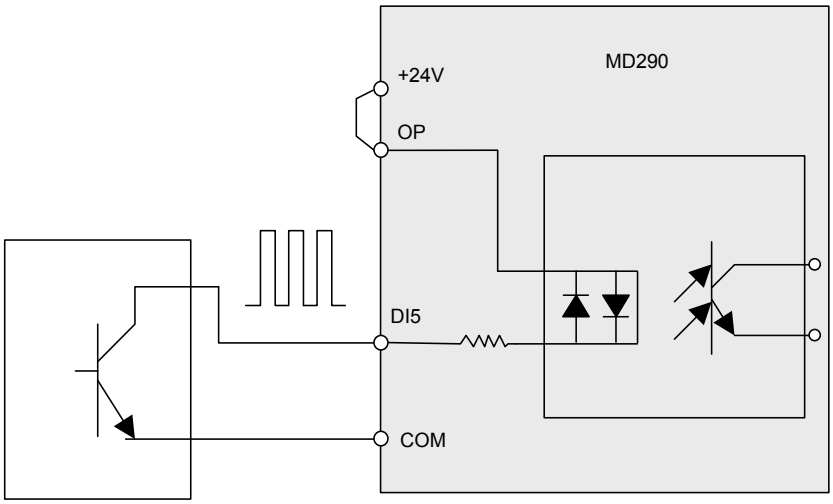

Pulse output device

www.Farazcontrol.com واحد فروش: ۰۹۱۲۹۲۷۵۱۵۹ (مهندس رمضان زاده)

■ Wiring of DO

When digital output terminal must drive relay, it is necessary to install an absorption diode across relay coil. This diode prevents inductive switching transients causing damage to the DC 24V power supply. The absorption diode must have a forward current rating of 50 mA.

Figure 3-25 Wiring of digital output terminal

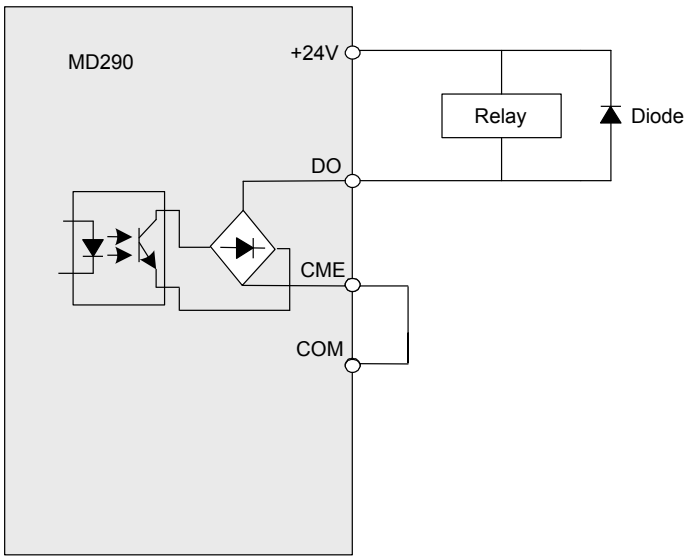

CAUTION

- Be careful to install absorption diode with correct polarity, to prevent damage to the 24 VDC power supply.
- CME and COM are internally insulated, but are shorted externally by a jumper. In this case, DO1 is driven by+24 V by default. Remove the jumper if you need to drive DO1 by an external power supply.

■ Wiring of High-speed Output FM

When the FM terminal is used for continuous pulse output, maximum output frequency is 100 kHz.

Figure 3-26 Wiring of high-speed output terminal FM

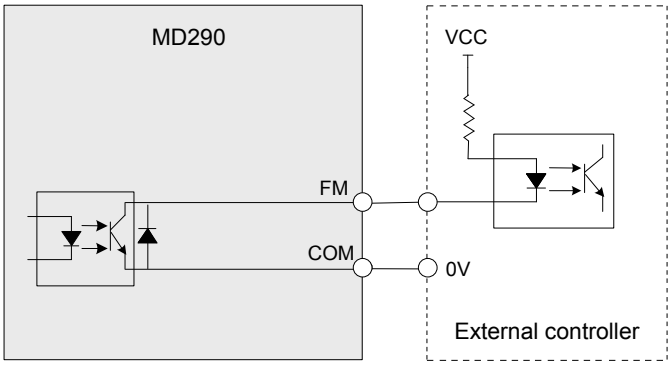

www.Farazcontrol.com واحد فروش: ۰۹۱۲۹۲۷۵۱۵۹ (مهندس رمضان زاده)

■ Wiring of Relay

To smooth peak voltage that results from cutting off power to inductive load (relay, contactor and motor), use a voltage dependent resistor (VDR) at the relay contact and add absorbing circuit to the inductive load, such as VDR, RC absorbing circuit or diode.

Figure 3-27 Wiring of relay

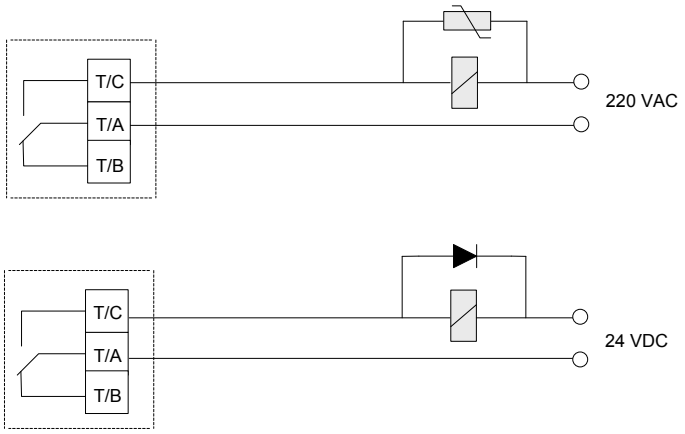

■ Wire Size and Torque Specification

Please use a ferrule-type terminal with insulated sleeves. Prepare wire ends with insulated sleeves before connecting to the drive. See Figure *3-28 Ferrule dimensions* below.

Figure 3-28 Ferrule dimensions

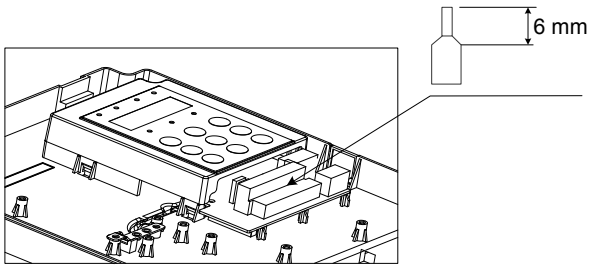

Table 3-14 Wire size and torque specification

Terminal Block	Single Wire (AWG/mm^2)	Twisted Wire (AWG/mm^2)	Tightening Torque (N·m)
Control circuit	AWG 24 to 18 (0.2 to 0.75 mm^2)		0.8 to 1.0

www.Farazcontrol.com واحد فروش: ۰۹۱۲۹۲۷۵۱۵۹ (مهندس رمضان زاده)

3.4 Wiring Checklist

□ √	No.	Item
□	1	Check that you receive a correct model .
□	2	Ensure correct peripheral devices (braking resistor, braking unit, AC reactor, filter and breaker) are used.
□	3	Check optional cards to ensure the receiving is correct.
□	4	Check that mounting method and location meet the requirements.
□	5	Check power supply input is within specification, e.g. 380/400/415/440/460/480 VAC.
□	6	Check that rated motor voltage matches the drive output specification.
□	7	Connect power supply to the R, S, T terminals of the drive properly.
□	8	Connect motor input cables to the U, V, W terminals of the drive properly.
□	9	Check that cable diameter of main circuit complies with specification.
□	10	Decrease F0-15 (carrier frequency) if motor output cable exceeds 50 m.
□	11	Ground the AC drive properly.
□	12	Check that output terminals and control signal terminals are connected securely and reliably.
□	13	Check whether more than one motors are driven. If yes, consider whether to add a thermal relay.
□	14	When using braking resistor and braking unit, check whether they are wired properly and whether their resistance value is proper.
□	15	Use shielded twisted pair (STP) cables as signal lines.
□	16	Connect optional cards correctly.
□	17	Segregate control wiring from power supply and motor cables.

www.Farazcontrol.com واحد فروش: ۰۹۱۲۹۲۷۵۱۵۹ (مهندس رمضان زاده)

www.Farazcontrol.com واحد فروش: ۰۹۱۲۹۲۷۵۱۵۹(مهندس رمضان زاده)

4. Operating Panel (Keypad & Display)

4.1 Introduction 80
4.2 Inbuilt LED Operating Panel 80

www.Farazcontrol.com واحد فروش: ۰۹۱۲۹۲۷۵۱۵۹ (مهندس رمضان زاده)

Chapter 4 Operating Panel (Keypad & Display)

4.1 Introduction

The AC drive has an inbuilt programming/operating panel with LED indicators and display. It allows you to operate function parameters and monitor/control system status.

Remote/external operating panel is available as an option (refer to *Chapter 8 Peripherals and Options*). MD32NKE1 is an LED version with identical functions to the inbuilt version.

4.2 Inbuilt LED Operating Panel

The LED operating panel allows you to monitor system operation, modify parameters and start or stop the AC drive.

Figure 4-1 Details of the operating panel

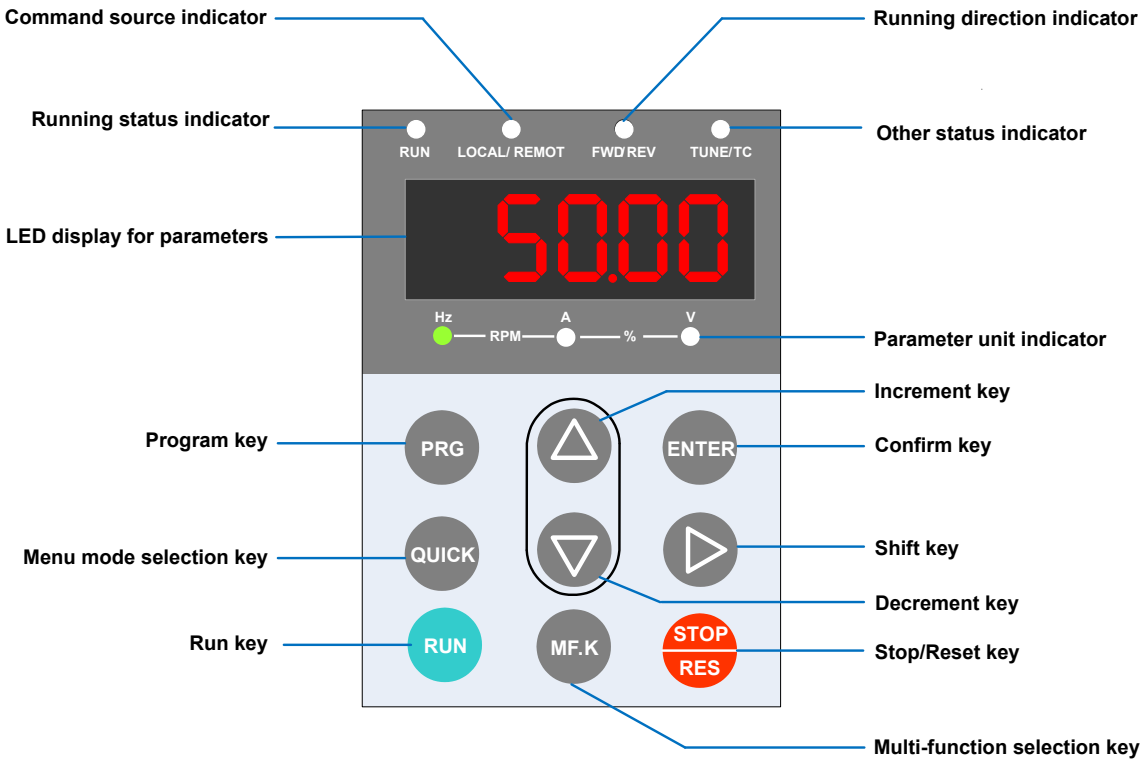

www.Farazcontrol.com واحد فروش: ۰۹۱۲۹۲۷۵۱۵۹ (مهندس رمضان زاده)

■ Keys on LED Operating Panel

Key	Key Name	Function
PRG	Programming	• Enter or exit Level I menu. • Return to the previous menu.
ENTER	Confirm	• Enter each level of menu interface. • Confirm displayed parameter setting.
△	Increment	• When navigating a menu, it moves the selection up through the screens available. • When editing a parameter value, it increases the displayed value. • When the AC drive is in RUN mode, it increases the speed.
▽	Decrement	• When navigating a menu, it moves the selection down through the screens available. • When editing a parameter value, it decreases the displayed value. • When the AC drive is in RUNNING mode, it decreases the speed.
▷	Shift	• Select the displayed parameter in the STOP or RUNNING status. • Select the digit to be modified when modifying a parameter value
RUN	RUN	Start the AC drive when using the operating panel control mode. It is inactive when using the terminal or communication control mode.
STOP RES	Stop/Reset	• Stop the AC drive when the drive is in the RUNNING status. • Perform a reset operation when the drive is in the FAULT status. Note: The functions of this key can be restricted by using function F7-02.
MF.K	Multifunction	Perform a function switchover as defined by the setting of F7-01, for example to quickly switch command source or direction.
QUICK	Menu mode selection	Press it to switch over between menu modes as defined by the setting of FP-03.

www.Farazcontrol.com واحد فروش: ۰۹۱۲۹۲۷۵۱۵۹ (مهندس رمضان زاده)

■ Relevant Parameters for Operating Panel Setting

Function Code	Parameter Name	Setting Range	Default
F7-01	MF.K key function selection	0: MF.K key disabled 1: Switchover from remote control (terminal or communication) to keypad control 2: Switchover between forward rotation and reverse rotation 3: Forward jog 4: Reverse jog	0
F7-02	STOP/RESET key function	0: STOP/RESET key enabled only in keypad control 1: STOP/RESET key enabled in any operation mode	1
FP-03	Parameter display property	For user defined and user modified parameters 00: non of them will display 01: user defined parameters will display 10: user modified parameters will display 11: both of them will display	00

■ Status Indicators

There are four red LED status indicators at the top of the operating panel.

Indicator	Indication
◯ **RUN**	OFF indicates the STOP status.
	ON indicates the RUNNING status.
◯ **LOCAL/REMOT**	OFF indicates under operating panel control.
	ON indicates under terminal control.
	FLASHING indicates under serial communication control.
◯ **FWD/REV**	OFF indicates reverse motor rotation.
	ON indicates forward motor rotation.
◯ **TUNE/TC**	ON indicates torque control mode.
	FLASHING SLOWLY (once a second) indicates auto-tuning status.
	FLASHING QUICKLY (four times a second) indicates a fault condition.

www.Farazcontrol.com واحد فروش: ۰۹۱۲۹۲۷۵۱۵۹ (مهندس رمضان زاده)

■ Unit Indicators

There are three red unit indicators below the data display. These indicators operate individually or in pairs to show the units used to display data, as shown in Figure 4-2.

Figure 4-2 Unit indicator explanation

Indicator appearance	Meaning
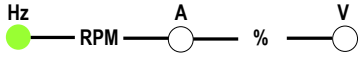	Hz for frequency
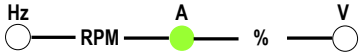	A for current
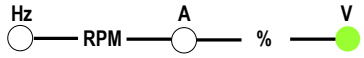	V for voltage
	RPM for motor speed
	Percentage

■ LED Display

The five-digit LED data display can show the following range of information:

- Frequency reference
- Output frequency
- Monitoring information
- Fault code

The following table lists indication of LED display.

LED Display	Indication	LED Display	Indication	LED Display	Indication	LED Display	Indication
0	0	6	6	C	C	N	N
1	1	7	7	c	c	P	P
2	2	8	8	d	D	r	R
3	3	9	9	E	E	T	T
4	4	A	A	F	F	U	U
5	5, S	b	B	L	L	u	u

www.Farazcontrol.com واحد فروش: ۰۹۱۲۹۲۷۵۱۵۹ (مهندس رمضان زاده)

4.2.1 LED Operating Panel Menu Structure

The drive operating panel has three levels of menu:

1. Level I - function parameter group
2. Level II - function parameter
3. Level III - function parameter value

Figure 4-3 Structure of three levels of menu

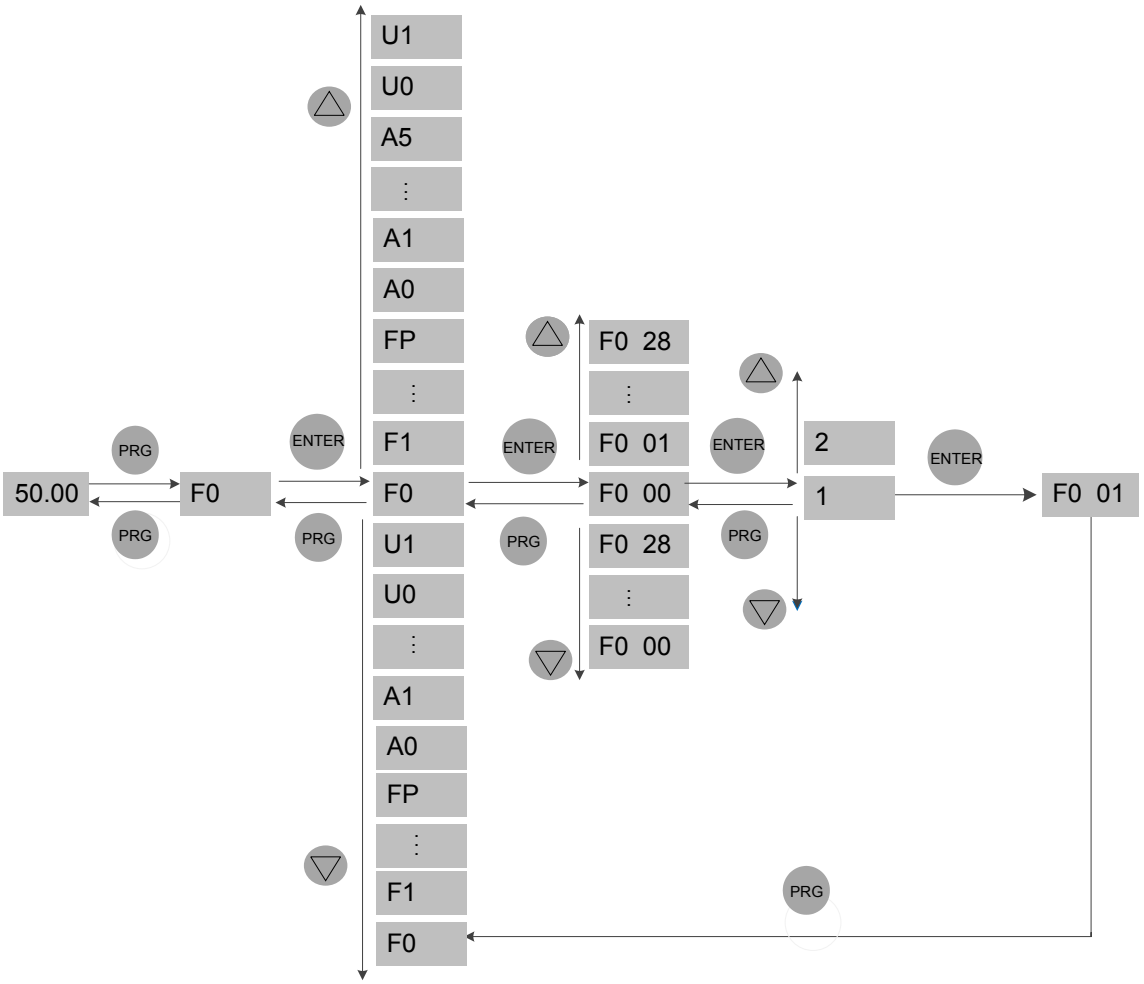

www.Farazcontrol.com واحد فروش: ۰۹۱۲۹۲۷۵۱۵۹ (مهندس رمضان زاده)

Operation procedure of the three levels of menu is as follows:

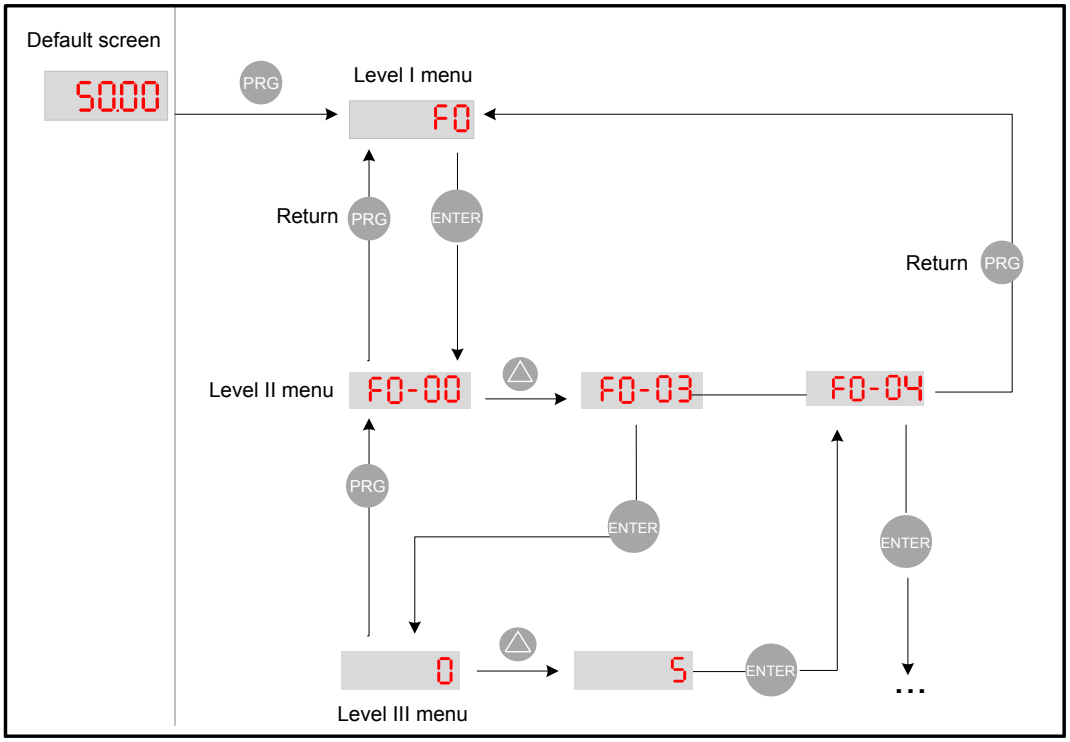

The following example shows how to modify F3-02 from 10.00 Hz to 15.00 Hz.

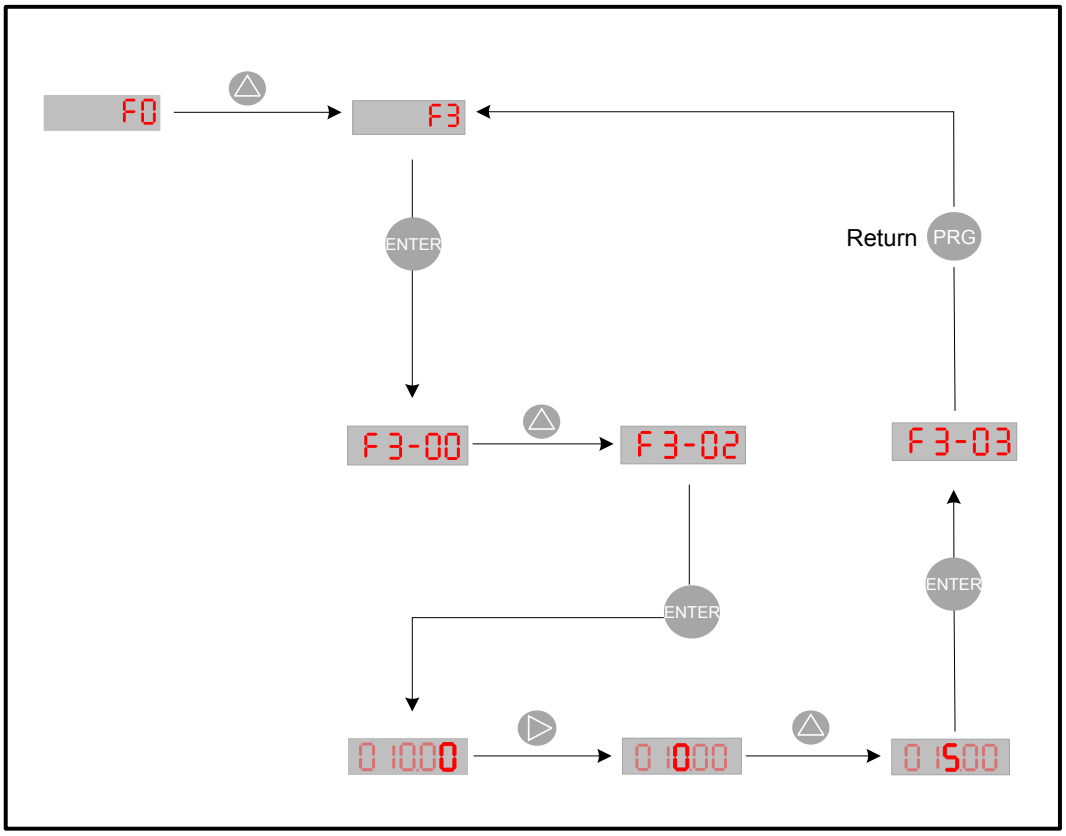

www.Farazcontrol.com واحد فروش: ۰۹۱۲۹۲۷۵۱۵۹ (مهندس رمضان زاده)

Press ENTER from a Level III menu to:

1. Save the parameter value you have set
2. Return to Level II menu, and then
3. Select the next function parameter.

Press PRG from a Level III menu to:

1. Return to Level II menu without saving the parameter value, and remain at the current function code.

■ Unmodifiable Parameters

When operating in Level III menus, if the parameter does not include a flashing digit, then it is not possible to modify that parameter. There are two possible reasons for this:

1. The function parameter you have selected is read-only. This is because:

   The display is showing the AC drive model.

   The display is showing an actual parameter detected by the system.

   The display is showing a running record parameter.

2. The displayed function parameter cannot be modified while the AC drive is in the RUNNING status. You can modify these types of parameter only when the AC drive is in the STOP status.

www.Farazcontrol.com واحد فروش: ۰۹۱۲۹۲۷۵۱۵۹ (مهندس رمضان زاده)

4.2.2 Overall Arrangement of Function Parameters

Function Code Group	Description	Standard Function Parameters
F0 to FP	Standard function code group	Standard function parameters
A0 to AC	Advanced function code group	AI/AO correction
U0 to U3	RUNNING status function code group	Display of basic parameters

■ Selection of Function Parameter Group

Figure 4-4 Selection of function parameter group

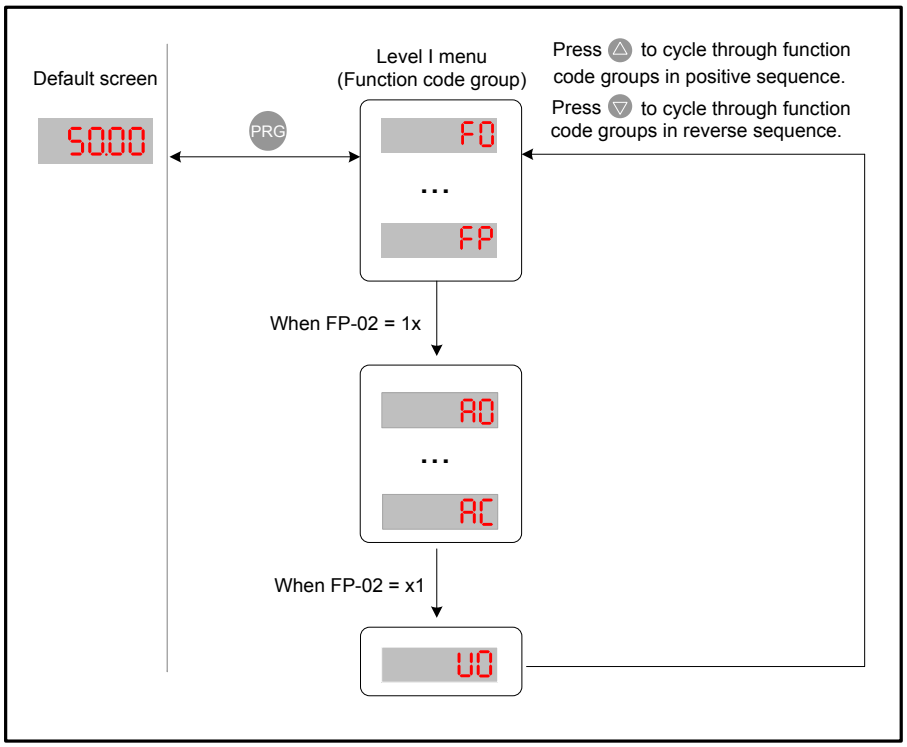

■ Selection of Displaying A and U Groups

The value you set for function parameter FP-02 determines whether the operating panel displays groups U and A.

Value of FP-02	Group A	Group U
00	Not displayed	Not displayed
01	Not displayed	Displayed
10	Displayed	Not displayed
11 (default)	Displayed	Displayed

www.Farazcontrol.com واحد فروش: ۰۹۱۲۹۲۷۵۱۵۹ (مهندس رمضان زاده)

The following table lists the often used parameters in the user-defined menu.

Table 4-3 Often used parameters in the user-defined menu

Function Code	User-defined Function Code	Parameter Name	Function Code	User-defined Function Code	Parameter Name
FE-00	F0-01	Motor 1 control mode	FE-01	F0-02	Command source selection
FE-02	F0-03	Main frequency reference setting channel selection	FE-03	F0-07	Frequency source calculation selection
FE-04	F0-08	Preset frequency	FE-05	F0-17	Acceleration time
FE-06	F0-18	Deceleration time	FE-07	F3-00	V/F curve setting
FE-08	F3-01	Torque boost	FE-09	F4-00	DI1 function selection
FE-10	F4-01	DI2 function selection	FE-11	F4-02	DI3 function selection
FE-12	F5-04	DO1 function selection	FE-13	F5-07	AO1 function selection
FE-14	F6-00	Start mode	FE-15	F6-10	Stop mode

If a function code in group FE is set to F0.00, it indicates that no parameter is defined by the user. If NULL is displayed after you press QUICK, it indicates that the user-defined menu is empty.

■ Editing Function Parameters

This editing method is mostly used in on-site commissioning.

- Pressing △ and ▽ in Level I menu is to quickly change function parameter group.
- Pressing △ and ▽ in Level II menu is to quickly increase or decrease function parameter number.
- Pressing △ and ▽ in Level III menu is to quickly increase or decrease function parameter value. To save parameter setting, press ENTER. To cancel parameter setting, press PRG.

www.Farazcontrol.com (مهندس رمضان زاده) واحد فروش: ۰۹۱۲۹۲۷۵۱۵۹

4.2.4 MF.K Key Function

Function of the MF.K key on the LED operating panel can be set via function parameter F7-01. You can switch over command source or frequency reference direction of the drive, and implement forward/reverse jog through this key in either STOP or RUNNING status.

Function Code	Parameter Name	Setting Range	Description	Default
F7-01	MF.K key function selection	0: Disabled	The key has no function.	0
		1: Switchover between operating panel and terminal/ communication	F0-02 = 0, there is no effect after you press the MF.K key. F0-02 = 1, command source can be switched over between terminal and operating panel through the MF.K key. F0-02 = 2, command source can be switched over between communication and operating panel through the MF.K key.	
		2: Forward/ Reverse RUN switchover	Frequency reference direction can be switched over through the MF.K key. This function is valid only when command source is operating panel.	
		3: Forward jog	Forward jog of the drive can be implemented through the MF.K key. This function is valid only when command source is operating panel.	
		4: Reverse jog	Forward jog of the drive can be implemented through the MF.K key. This function is valid only when command source is operating panel.	

4.2.5 Saving and Restoring Settings

After you change value of any function parameter, the drive saves the new value locally so that it remains effective when you power on the drive next time. The drive also retains alarm information and cumulative running time data.

The drive allows you to make a separate external backup of parameter settings. This feature allows you to load a set of parameter settings during commissioning, or to restore a set of parameter settings after completing a maintenance or repair operation on the drive.

You can also restore default parameter settings, or clear running data by using function parameter FP-01.

Function Code	Parameter Name	Setting Range	Default
FP-01	Parameter initialization	0: No operation	0
		1: Restore default settings except motor parameters	
		2: Clear records including errors	
		4: Back up parameters	
		501: Restore user's backup parameters	

www.Farazcontrol.com واحد فروش: ۰۹۱۲۹۲۷۵۱۵۹ (مهندس رمضان زاده)

4.2.6 Password Security

The AC drive provides a security protection function that requires a user-defined password. Function parameter FP-00 controls this function.

When FP-00 has the default value zero, it is not necessary to enter a password to program the AC drive.

To enable password protection, do as follows:

1. Set a non-zero value for FP-00. This value is the user-defined password.
2. Make a written note of the value you have set for FP-00 and keep the note in a safe location.
3. Press ENTER to exit the function parameter editing mode.

The password protection is successfully enabled. Then when you press PRG , the display shows "------". You must enter the correct password to enter the programming menu.

To remove password protection, do as follows:

1. Use the current password to enter the function parameter editing mode.
2. Set FP-00 to zero.
3. Press ENTER to exit the function parameter editing mode.

The password protection is successfully removed.

The following figure gives an example, showing how to set the password to 12345.

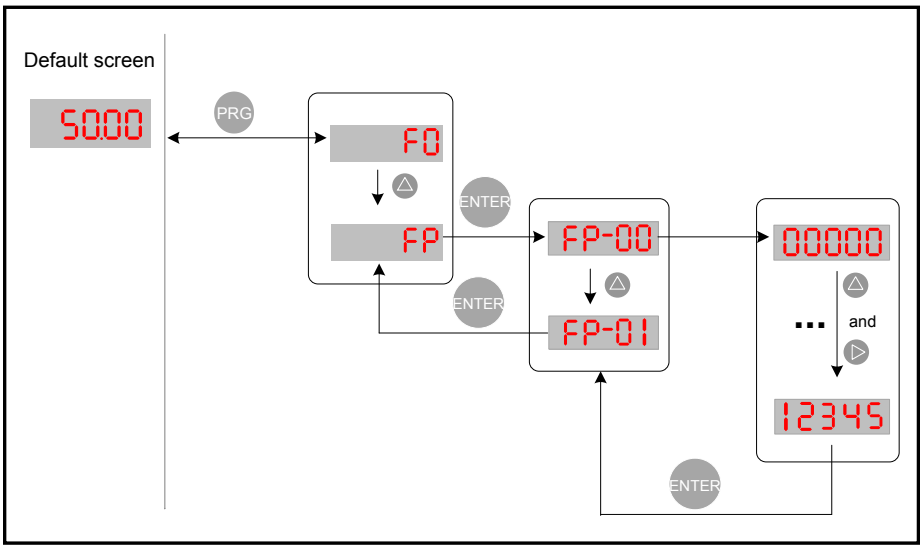

4.2.7 LED Default Display Check

Para. No.	Param. Name	Setting Range	Default	Property
F7-00	LED default display check	0: Disabled 1: Enabled	0	★

This function is used to check whether hardware damage exists on nixie tube and LED indicator.

After F7-00 is set to 1, the nixie tubes and LED flashes for 10s and then the operating panel enters the default screen. During the 10s, the AC drive does not respond to the RUN command.

www.Farazcontrol.com (مهندس رمضان زاده) ۰۹۱۲۹۲۷۵۱۵۹ واحد فروش:

5. Quick Setup

5.1 Get Familiar With Operating Panel 92
5.2 Setup Flowchart 93

www.Farazcontrol.com واحد فروش: ۰۹۱۲۹۲۷۵۱۵۹ (مهندس رمضان زاده)

Chapter 5 Quick Setup

5.1 Get Familiar With Operating Panel

Before any commissioning work, you must go back to chapter 4 to get acquainted with the operating panel first. The operating panel allows you to monitor system operation, modify parameters and start or stop the AC drive.

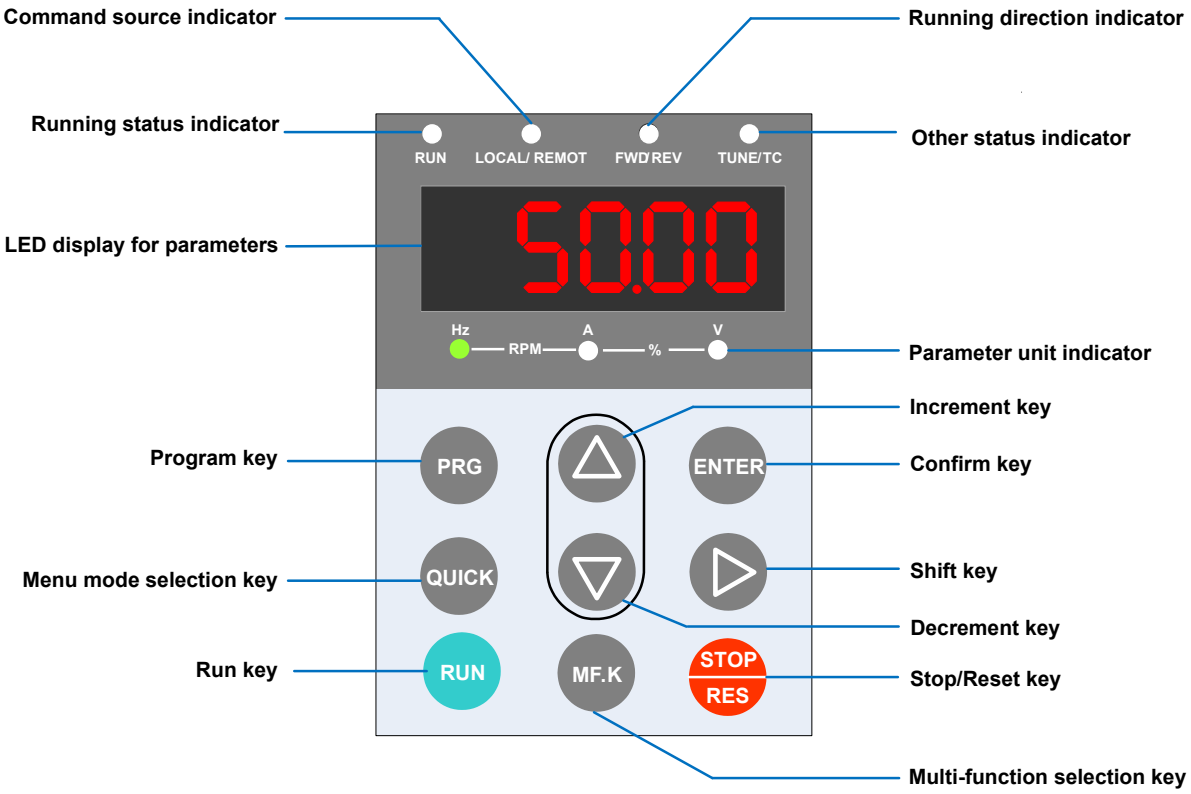

www.Farazcontrol.com واحد فروش: ۰۹۱۲۹۲۷۵۱۵۹ (مهندس رمضان زاده)

5.2 Setup Flowchart

START	Para.	Parameter name	Default	Commission
Before power on				
Install and wire the drive		Install and wire the drive as explained in chapters 1 to 3.		
↓				
Check wirings of power supply and AC drive outputs		-		
↓				
Restore parameters	FP-01	Parameter initialization	0	
↓		0: No operation 1: Restore default settings except motor parameters 2: Clear records including errors 4: Back up parameters 501: Restore user's backup parameters NOTE: It is recommended to "Restore default settings" prior to commissioning the AC drive.		
Set motor parameters		Motor Nameplate		
↓		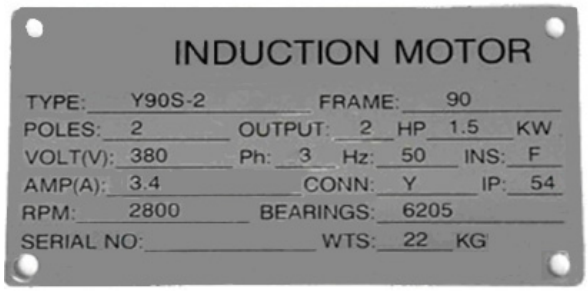		
	F1-01	Rated motor power	model dependent	1.5
		Unit: kW		
	F1-02	Rated motor voltage	model dependent	380
		Unit: V		
	F1-03	Rated motor current	model dependent	3.4
		Unit: A		
	F1-04	Rated motor frequency	model dependent	50
		Unit: Hz		
	F1-05	Rated motor speed	model dependent	2800
		Unit: rpm.		

CONTINUE	Para.	Parameter name	Default	Commission

www.Farazcontrol.com واحد فروش: ۰۹۱۲۹۲۷۵۱۵۹ (مهندس رمضان زاده)

CONTINUE	Para.	Parameter name	Default	Commission
Perform motor auto tuning	F1-37	Auto-tuning selection	0	
		0: No auto-tuning 1: Static auto-tuning 1 2: Dynamic auto-tuning 3: Static auto-tuning 2 NOTE: Motor won't rotate at this stage. Steps of auto-tuning: 1. Make sure the UVW connection between AC drive and motor is not cut off by output contactor; if it is cut off, then manually handle with the output contactor. 3. Set F1-37 = 3, press ENTER, then LED on panel will display letters "TUNE". 4. Press the RUN key on panel, then motor starts auto-tuning, it usually takes about 30 seconds to finish this auto-tuning, wait until LED stops displaying "TUNE". 5. Restore F0-02 to the default value 1.		
If AI2 is frequency reference				
Set AI2	F4-18	AI curve 2 minimum input	0.00	
		0 V to F4-20;		
	F4-19	Corresponding percentage of AI2 minimum input	0.0	
		-100.0% to 100.0%		
	F4-20	AI2 maximum input	10.00	
		F4-18 to 10.00 V		
	F4-21	Corresponding percentage of AI2 maximum input	100.0	
		-100.0% to 100.0%		
If AI3 is frequency reference				
Set AI3	F4-23	AI curve 3 minimum input	0.00	
		0 V to F4-25;		
	F4-24	Corresponding percentage of AI3 minimum input	0.0	
		-100.0% to 100.0%		
	F4-25	AI3 maximum input	10.00	
		F4-23 to 10.00 V		
	F4-26	Corresponding percentage of AI3 maximum input	100.0	
		-100.0% to 100.0%		
If multi-reference is frequency reference				
Set multi-reference	FC-00	Reference 0	0.0	
		0.0 to 100.0%.		
	FC-01 to FC-15	Reference 1-15	0.0	
		0.0 to 100.0%.		
CONTINUE	Para.	Parameter name	Default	Commission

www.Farazcontrol.com واحد فروش: ۰۹۱۲۹۲۷۵۱۵۹ (مهندس رمضان زاده)

CONTINUE	Para.	Parameter name	Default	Commission
If any digital input is used				
Set DI function	F4-00	DI1 function selection	1	
		0: No function 1: Forward RUN (FWD) 2: Reverse RUN (REV) 3: Three-wire control 4: Forward JOG (FJOG) 5: Reverse JOG (RJOG) 6: Terminal UP 7: Terminal DOWN 8: Coast to stop 9: Fault reset (RESET) 10: RUN pause 11: External fault normally open (NO) input 12: Multi-reference terminal 1 13: Multi-reference terminal 2 14: Multi-reference terminal 3 15: Multi-reference terminal 4 16: Terminal 1 for acceleration/deceleration time selection 17: Terminal 2 for acceleration/deceleration time selection 18: Frequency source switchover 19: UP and DOWN setting clear (terminal, keypad) 20: Command source switchover terminal 1 21: Acceleration/Deceleration prohibited 22: PID pause 23: PLC status reset 24: Swing pause 25: Counter input 26: Counter reset 27: Length count input 28: Length reset 29: Torque control prohibited 30: Pulse input (enabled only for DI5) 31: Reserved 32: Immediate DC injection braking		
CONTINUE	Para.	Parameter name	Default	Commission

www.Farazcontrol.com واحد فروش: ۰۹۱۲۹۲۷۵۱۵۹ (مهندس رمضان زاده)

CONTINUE	Para.	Parameter name	Default	Commission
	F4-00	DI1 function selection	1	
		33: External fault normally closed (NC) input 34: Frequency modification forbidden 35: PID action direction reverse 36: External STOP terminal 1 37: Command source switchover terminal 2 38: PID integral disabled 39: Switchover between main frequency source X and preset frequency 40: Switchover between auxiliary frequency source Y and preset frequency 41: Motor selection terminal 1 42: Motor selection terminal 2 43: PID parameter switchover 44: User-defined fault 1 45: User-defined fault 2 46: Speed control/Torque control switchover 47: Emergency stop 48: External STOP terminal 2 49: Deceleration DC injection braking 50: Clear the current running time 51–59: Reserved Setting range:0 to 59;		
	F4-01	DI2 function selection	4	
		Setting range same as DI1.		
	F4-02	DI3 function selection	9	
		Setting range same as DI1.		
	F4-03	DI4 function selection	12	
		Setting range same as DI1.		
	F4-04	DI5 function selection	13	
		Setting range same as DI1;		
	F4-05	DI6 function selection	0	
		Setting range same as DI1;		
	F4-06	DI7 function selection	0	
		Setting range same as DI1;		
	F4-07	DI8 function selection	0	
		Setting range same as DI1		
	F4-08	DI9 function selection	0	
		Setting range same as DI1.		
	F4-09	DI10 function selection	0	
		Setting range same as DI1;		

CONTINUE | Para. | Parameter name | Default | Commission

www.Farazcontrol.com واحد فروش: ۰۹۱۲۹۲۷۵۱۵۹ (مهندس رمضان زاده)

CONTINUE	Para.	Parameter name	Default	Commission
If any digital output is used				
Set DO function	F5-00	FM output mode selection	0	
		0: FM terminal outputs pulses, the frequency of which represents the value of variable which is assigned by F5-06. 1: FM terminal outputs switch signal, the value of which represents the status of variable which is assigned by F5-01		
	F5-01	FM (switch signal) function selection	0	
		0: No output 1: AC Drive running 2: Fault output 3: Frequency-level detection FDT1 output 4: Frequency reached 5: Zero-speed running (no output at stop) 6: Motor overload pre-warning 7: AC drive overload pre-warning 8: Set count value reached 9: Designated count value reached 10: Length reached 11: PLC cycle completed 12: Accumulative running time reached 13: Frequency limited 14: Torque limited 15: Ready for RUN 16: Reserved 17: Frequency upper limit reached 18: Frequency lower limit reached (no output at stop) 19: Undervoltage status output 20: Communication setting 21,22: Reserved 23: Zero-speed running 2 (having output at stop) 24: Accumulative power-on time reached 25: Frequency level detection FDT2 output 26: Frequency 1 reached 27: Frequency 2 reached 28: Current 1 reached 29: Current 2 reached 30: Timing duration reached 31: AI1 input limit exceeded 32: Load lost 33: Reverse running		

| CONTINUE | Para. | Parameter name | Default | Commission |

www.Farazcontrol.com واحد فروش: ۰۹۱۲۹۲۷۵۱۵۹ (مهندس رمضان زاده)

CONTINUE

Para.	Parameter name	Default	Commission
F5-01	FM (switch signal) function selection	0	
	34: Zero current status 35: IGBT temperature reached 36:Software current limit exceeded 37: Frequency lower limit reached (having output at stop) 38: Alarm output 39: Motor overheat warning 40: Current running time reached 41: Fault output (no output at undervoltage)		
F5-02	Relay function selection(T/A-T/B-T/C)	2	
	Setting range same as FM;		
F5-03	Relay function selection (P/A-P/B-P/C)	0	
	Setting range same as FM; the relay P/A-P/B-P/C is on extension I/O card.		
F5-04	DO1 function selection	1	
	Setting range same as FM		
F5-05	Extension card DO2 function selection	4	
	Setting range same as FM		
F5-06	FM (pulse signal) function selection	0	
	0: Running frequency 1: Set frequency 2: Output current 3: Reserved 4: Output power 5: Output voltage 6: Pulse input 7: AI1 8: AI2 9: AI3 10: Length 11: Count value 12: Communication setting 13: Motor rotational speed 14: Output current 15: Output voltage 16: Reserved		

if an analog output is used

Set AO function

F5-07	AO1 function selection	0	
	Setting range same as F5-06		
F5-08	AO2 function selection	1	
	Setting range same as F5-06; AO2 is on extension card.		

CONTINUE

Para. Parameter name Default Commission

www.Farazcontrol.com واحد فروش: ۰۹۱۲۹۲۷۵۱۵۹ (مهندس رمضان زاده)

CONTINUE	Para.	Parameter name	Default	Commission
Set accel/decel time	F0-17	Acceleration time 1	model dependent	
		0 : Linear acceleration/deceleration 1: Static S-curve acceleration/deceleration 2: Dynamic S-curve acceleration/ deceleration		
		0.00 to 650.00s (if F0-19 = 2) 0.0 to 6500.0s (if F0-19 = 1) 0 to 65000s (if F0-19 = 0)		
	F0-18	Deceleration time 1	model dependent	
		0.00 to 650.00s (if F0-19=2) 0.0 to 6500.0s (if F0-19=1) 0 to 65000s (if F0-19=0)		
If smooth accel/decel is requested				
Set S-curve	F6-07	Acceleration/Deceleration mode	0	
		0 : Linear acceleration/deceleration 1: Static S-curve acceleration/deceleration 2: Dynamic S-curve acceleration/deceleration		
	F6-08	Time proportion of S-curve at Accel start	30.0	
		0.0% to (100.0% - F6-09)		
	F6-09	Time proportion of S-curve at Accel end	30.0	
		0.0% to (100.0% - F6-08)		

CONTINUE	Para.	Parameter name	Default	Commission

www.Farazcontrol.com واحد فروش: ۰۹۱۲۹۲۷۵۱۵۹ (مهندس رمضان زاده)

CONTINUE	Para.	Parameter name	Default	Commission
Set V/F parameters	F3-00	V/F curve selection	0	
		0: Linear V/F 1: Multi-point V/F 2: Square V/F 3: 1.2-power V/F 4: 1.4-power V/F 6: 1.6-power V/F 8: 1.8-power V/F 9: Reserved 10: V/F complete separation 11: V/F half separation SETTING RANGE: 0 to 11		
	F3-01	Torque boost	0.0	
		0.0 to 30.0 %; NOTE: if it is 0, then fixed torque boost is activated, and it is recommended to use fixed torque boost.		
	F3-02	Frequency limit of torque boost	50.00	
		0.00 Hz to maximum output frequency		
	F3-03	Multi-point V/F frequency 1	0.00	
		0.00 Hz to F3-05		
	F3-04	Multi-point V/F voltage 1	0.0	
		0.0 to 100.0 V		
	F3-05	Multi-point V/F frequency 2	0.00	
		F3-03 to F3-07, Hz		
	F3-06	Multi-point V/F voltage 2	0.0	
		0.0 to 100.0 V		
	F3-07	Multi-point V/F frequency 3	0.00	
		F3-05 to rated motor frequency F1-04, Hz		
	F3-08	Multi-point V/F voltage 3	0.0	
		0.0 to 100.0 V		
Trial RUN		Use operating panel, or digital input terminal, or serial communication control, to start AC rive, check if the running performance satisfies your application. If yes, then go forward to next step, if NO, then go back to check.		
Finish				

www.Farazcontrol.com واحد فروش: ۰۹۱۲۹۲۷۵۱۵۹ (مهندس رمضان زاده)

6. Description of Parameters

6.1 Start/Stop Command Source 102
6.2 Set Frequency Reference..... 110
6.3 Start/Stop the AC Drive 136
6.4 Motor Auto-tuning 143
6.5 Control Performance 146
6.6 Protections 153
6.7 Monitoring..... 160
6.8 Process Control..... 166
6.9 Control Circuit Terminals 178
6.10 Communication..... 192
6.11 Auxiliary Function..... 200

www.Farazcontrol.com واحد فروش: ۰۹۱۲۹۲۷۵۱۵۹ (مهندس رمضان زاده)

Chapter 6 Description of Parameters

6.1 Start/Stop Command Source

Three control methods are available:

- Operating panel (keypad & display)
- Terminal I/O control
- Serial communication

You can select the required control mode in function parameter F0-02.

Function Code	Parameter Name	Setting Range	Default
F0-02	Command source selection	0: Operating panel (keypad & display) (LED off) 1: Terminal I/O control (LED on) 2: Serial comms. (LED flashing)	0

- F0-02 = 0: Operating panel (keypad & display) (The LOCAL/REMOT indicator is off.)

  The RUN commands are given by pressing keys RUN and STOP RES on the operating panel.

  – Press RUN to start the AC Drive.

  – Press STOP RES to stop the AC Drive.

  For details on operating panel, refer to *Chapter 4 Operating Panel (Keypad & Display)*.

- F0-02 = 1: Terminal I/O control (The LOCAL/REMOT indicator is on.)

  The terminal I/O control mode applies to installations where the Start and Stop signals come from:

  – A DIP switch or electromagnetic button, or

  – A dry contact signal source

  Commands are given by using multi-functional input terminals with functions such as FWD, REV, JOGF and JOGR.

  For details on terminal I/O control, see *6.1.1 Terminal I/O Control*.

- F0-02 = 2: Serial comms (The LOCAL/REMOT indicator is flashing.)

  The available serial communication options are Modbus, PROFIBUS-DP, CANlink, CANopen.

  For details on serial communication, see *6.1.2 Serial Communication*.

www.Farazcontrol.com واحد فروش: ۰۹۱۲۹۲۷۵۱۵۹ (مهندس رمضان زاده)

6.1.1 Terminal I/O Control

F4-11 defines the four terminal I/O control modes, in which the drive running is controlled by DI terminals.

Function Code	Parameter Name	Setting Range	Default
F4-11	Terminal I/O control mode	0: Two-wire control mode 1 1: Two-wire control mode 2 2: Three-wire control mode 1 3: Three-wire control mode 2	0

Figure 6-1 Four terminal I/O control modes

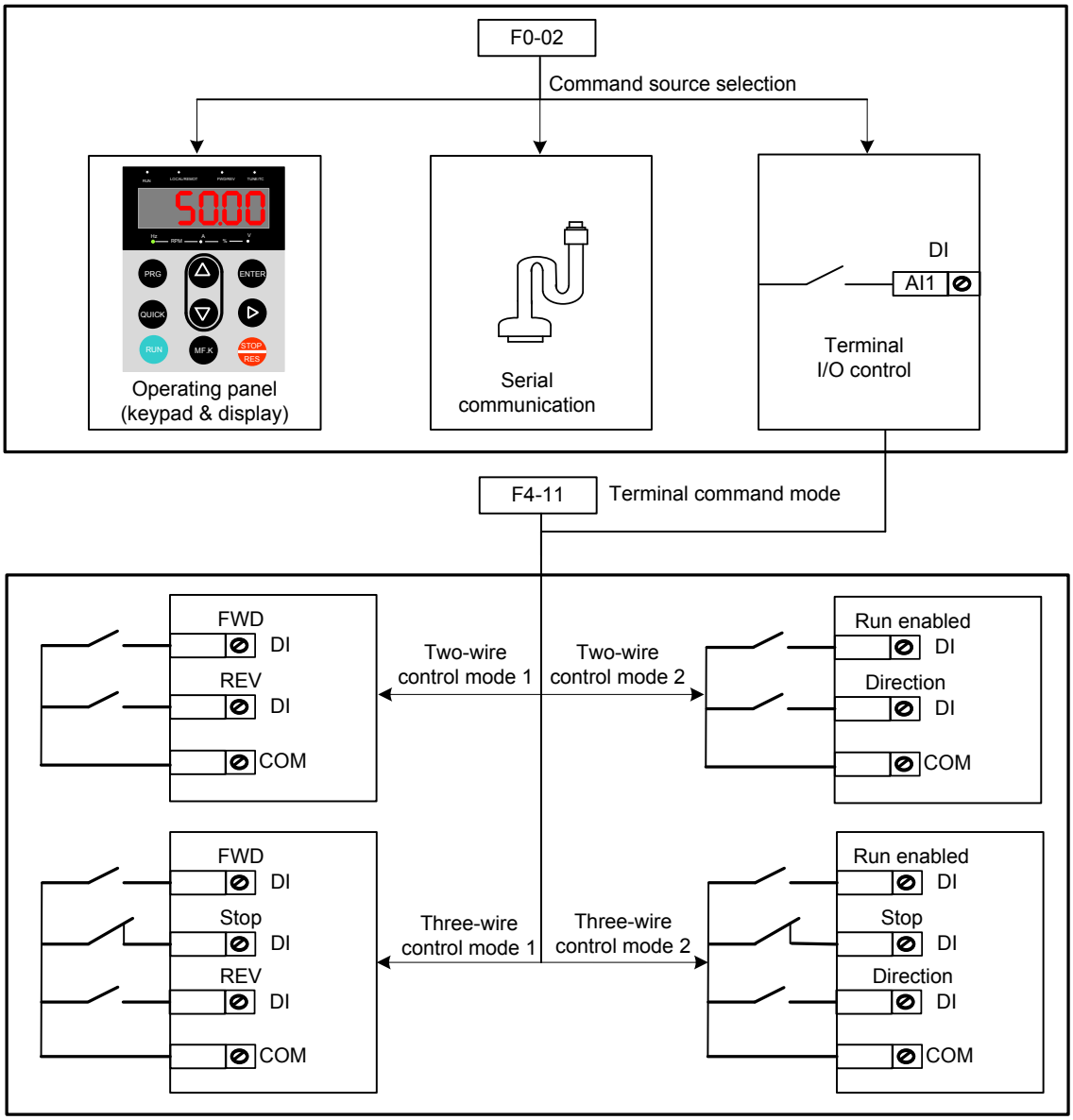

www.Farazcontrol.com واحد فروش: ۰۹۱۲۹۲۷۵۱۵۹ (مهندس رمضان زاده)

The following example takes DI1, DI2 and DI3 to describe how to control the AC drive via DI terminals.

■ F4-11 = 0: Two-wire Control Mode 1

It is the most commonly used two-wire control mode. Allocate DI1 with forward run function and DI2 with reverse run function.

You need to connect forward run switch to DI1 and reverse run switch to DI2.

The parameters are set as below:

Function Code	Parameter Name	Value	Function Description
F0-02	Command source selection	1	Terminal I/O control
F4-11	Terminal I/O control mode	0	Two-wire control mode 1
F4-00	DI1 function selection	1	Forward RUN (FWD)
F4-01	DI2 function selection	2	Reverse RUN (REV)

In this mode,

- When SW1 is closed, motor rotates in forward direction. When SW1 is open, motor stops.
- When SW2 is closed, motor rotates in reverse direction. When SW2 is open, motor stops.
- When SW1 and SW2 are both open or closed simultaneously, motor stops.

Figure 6-2 Two-wire 1 sequence wiring diagram

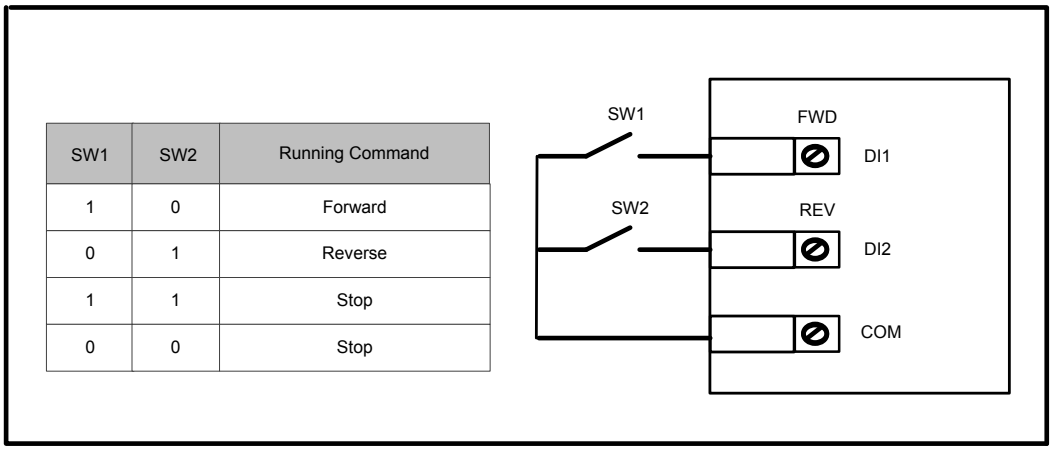

SW1	SW2	Running Command
1	0	Forward
0	1	Reverse
1	1	Stop
0	0	Stop

www.Farazcontrol.com واحد فروش: ۰۹۱۲۹۲۷۵۱۵۹ (مهندس رمضان زاده)

Sequence diagrams of two-wire control mode 1 are shown in the following two figures.

Figure 6-3 Two-wire 1 sequence (normal)

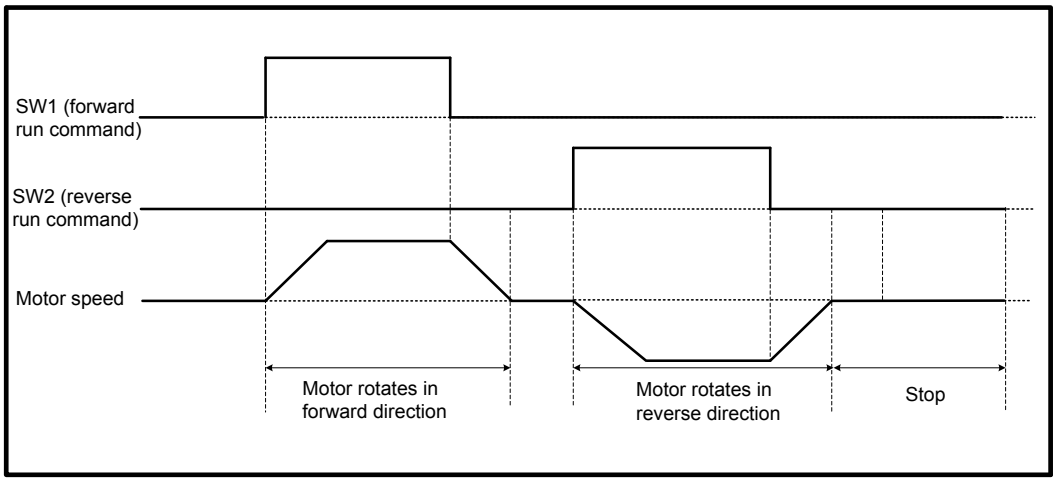

Figure 6-4 Two-wire 1 sequence (abnormal)

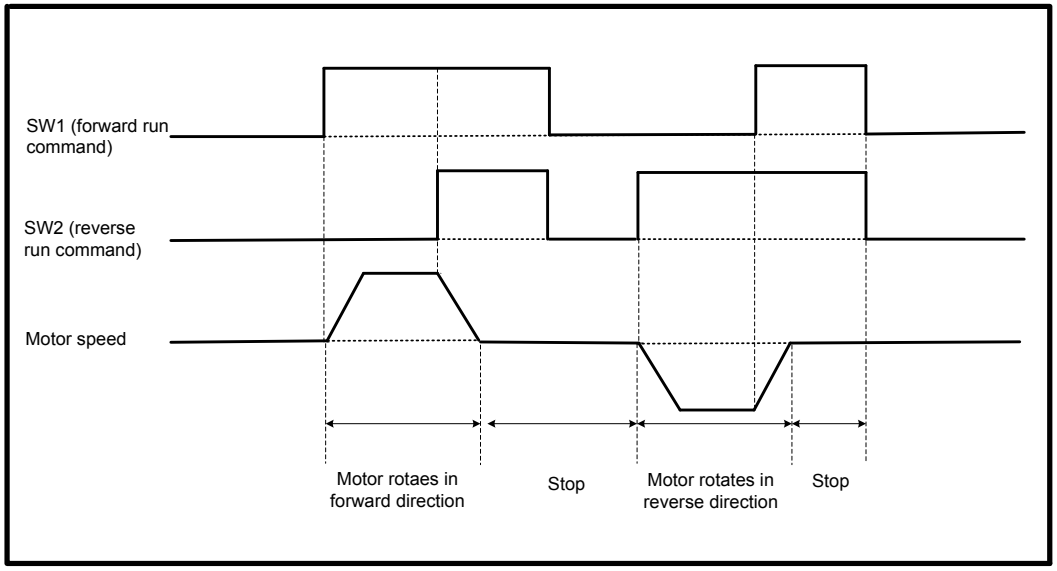

www.Farazcontrol.com واحد فروش: ۰۹۱۲۹۲۷۵۱۵۹ (مهندس رمضان زاده)

■ F4-11 = 1: Two-wire Control Mode 2

In this mode, DI1 is RUN enabled terminal, and DI2 determines running direction. Allocate DI1 for RUN enabled function and DI2 for running direction.

The parameters are set as below:

Function Code	Parameter Name	Value	Function Description
F0-02	Command source selection	1	Terminal I/O control
F4-11	Terminal I/O control mode	1	Two-wire control mode 2
F4-00	DI1 function selection	1	Forward RUN (FWD)
F4-01	DI2 function selection	2	Reverse RUN (REV)

In this mode,

- When SW1 is closed, motor rotates in forward direction with SW2 open.
- When SW1 is closed, motor rotates in reverse direction with SW2 closed.
- When SW1 is open, motor stops no matter whether SW2 is open or closed.

Figure 6-5 Two-wire 2 sequence wiring diagram

SW1	SW2	Running Command
1	0	Forward
1	1	Reverse
0	0	Stop
0	1	Stop

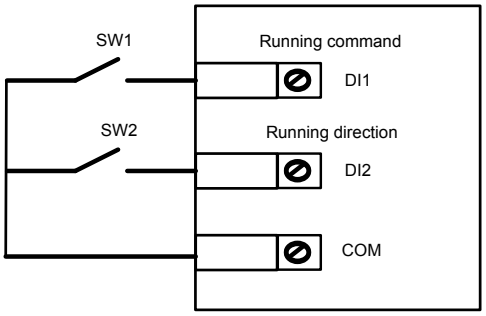

Sequence diagram of two-wire control mode 2 is shown in the following figure.

Figure 6-6 Two-wire 2 sequence

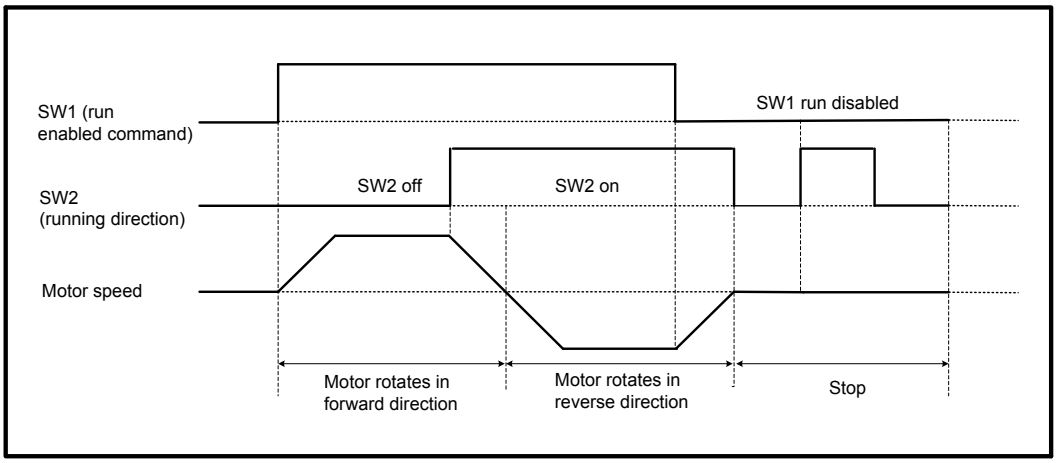

www.Farazcontrol.com واحد فروش: ۰۹۱۲۹۲۷۵۱۵۹ (مهندس رمضان زاده)

■ F4-11 = 2: Three-wire Control Mode 1

In this mode, DI3 is three-wire control terminal. DI1 is set for forward run function and DI2 is set for reverse run function. The parameters are set as below:

Function Code	Parameter Name	Value	Function Description
F0-02	Command source selection	1	Terminal I/O control
F4-11	Terminal I/O control mode	2	Three-wire control mode 1
F4-00	DI1 function selection	1	Forward RUN (FWD)
F4-01	DI2 function selection	2	Reverse RUN (REV)
F4-01	DI3 function selection	3	Three wire control

SW3 is a normally-closed button and SW1 and SW2 are normally-open buttons.

- SW3 must remain closed during START sequence and during normal RUN operation.
- Motor stops immediately when SW3 opens.
- Signals from SW1 and SW2 are valid only with SW3 closed.
- On normal condition (SW3 closed), after you press down SW1, motor rotates in forward direction. After you press down SW2, motor rotates in reverse direction.

Figure 6-7 Three-wire 1 sequence wiring diagram

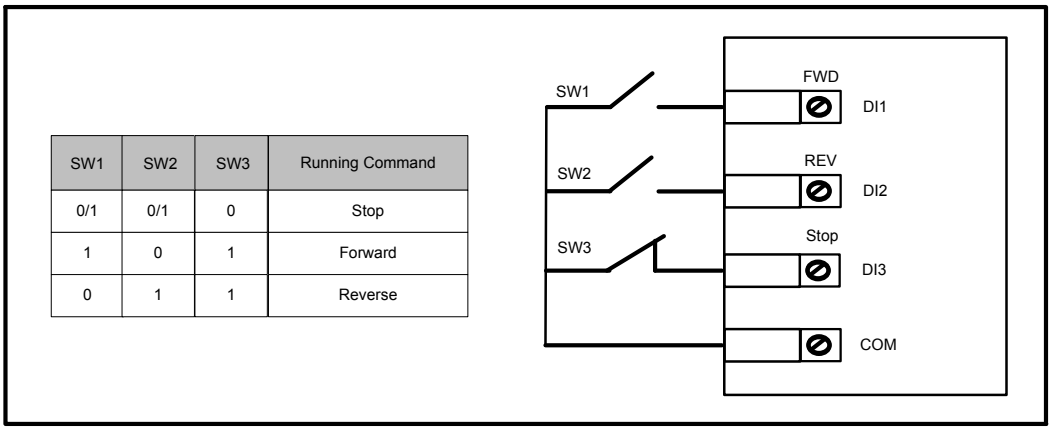

SW1	SW2	SW3	Running Command
0/1	0/1	0	Stop
1	0	1	Forward
0	1	1	Reverse

Sequence diagram of three-wire control mode 1 is shown in the following figure.

Figure 6-8 Three-wire 1 sequence

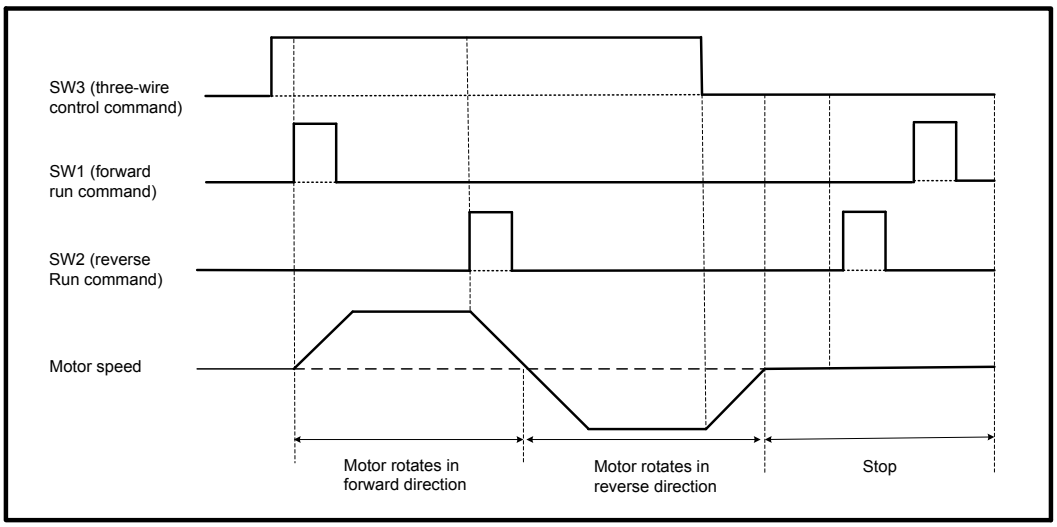

www.Farazcontrol.com واحد فروش: ۰۹۱۲۹۲۷۵۱۵۹ (مهندس رمضان زاده)

■ F4-11 = 3: Three-wire Control Mode 2

In this mode, DI3 is three-wire control command terminal. DI1 determines whether the RUN command is enabled and DI2 determines running direction.

The parameters are set as below:

Function Code	Parameter Name	Value	Function Description
F0-02	Command source selection	1	Terminal I/O control
F4-11	Terminal I/O control mode	3	Three-wire control mode 2
F4-00	DI1 function selection	1	Forward RUN (FWD)
F4-01	DI2 function selection	2	Reverse RUN (REV)
F4-01	DI2 function selection	3	Three wire control

SW3 is a normally-closed button and SW1 and SW2 are normally-open buttons.

- SW3 must remain closed during start sequence and during normal run operation.
- Motor stops immediately when SW3 opens.
- Signals from SW1 and SW2 are valid only with SW3 closed.
- On normal condition (SW3 closed), after you press down SW1, motor rotates in forward direction with SW2 open. Motor rotates in reverse direction with SW2 closed.

Figure 6-9 Three-wire 2 sequence wiring diagram

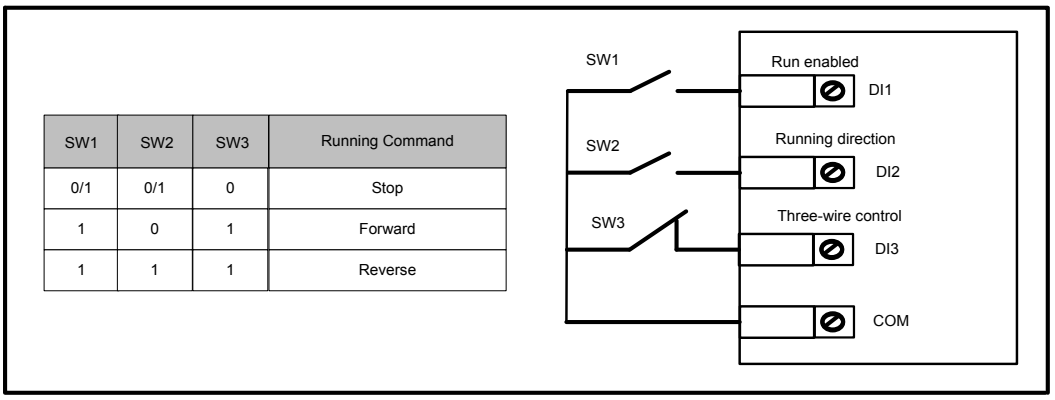

SW1	SW2	SW3	Running Command
0/1	0/1	0	Stop
1	0	1	Forward
1	1	1	Reverse

The timing diagram of the three-wire control mode 2 is shown in the following figure.

Figure 6-10 Three-wire 2 sequence

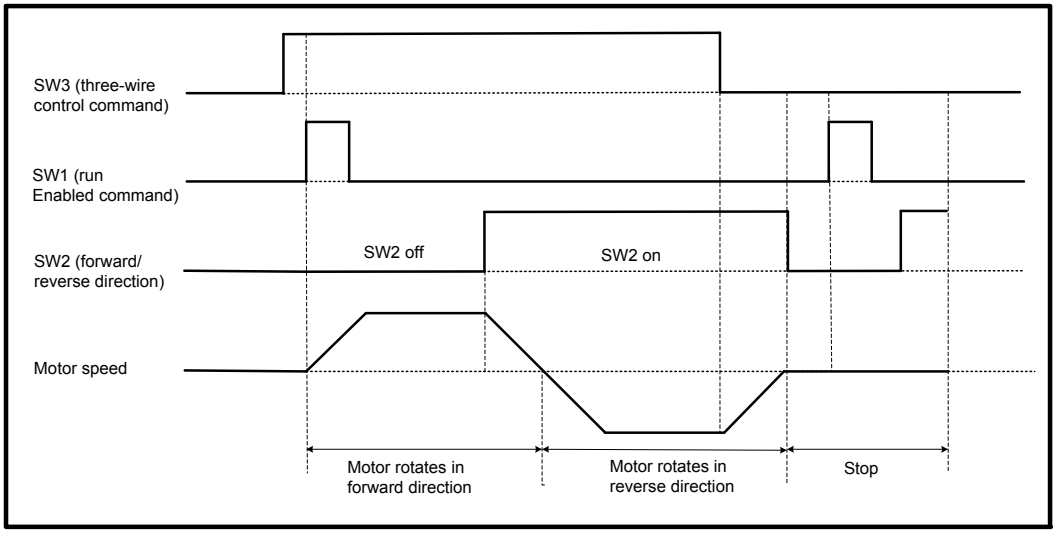

www.Farazcontrol.com واحد فروش: ۰۹۱۲۹۲۷۵۱۵۹ (مهندس رمضان زاده)

6.1.2 Serial Communication

We have the serial communications options, Modbus, Profibus-DP, CANlink and CANopen.

F0-28 has to be set correctly to engage the selected serial communication card if Modbus, Profibus-DP or CANopen is selected. F0-28 need not be set if CANlink is selected.

Function Code	Parameter Name	Setting Range	Default
F0-28	Serial port communication protocol	0: Modbus protocol 1: PROFIBUS-DP protocol or CANopen protocol	0

When the AC drive is controlled via serial communication, the host computer must send write command to the AC drive. Here takes the Modbus protocol as an example to describe process of giving run command via communication.

Figure 6-11 Example below with Modbus serial comms.

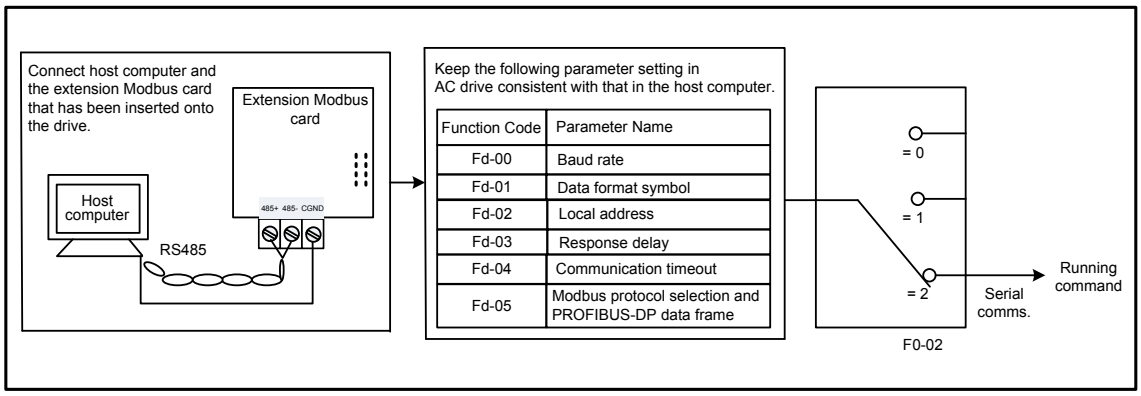

To make the drive run in reverse direction, the host computer sends the write command 01 06 20 00 00 02 03 CB (hexadecimal). In the command,

- 01H (settable): AC drive address
- 06H: write command
- 2000H: communication address
- 02H: reverse run
- 03CBH: CRC check

For definition of other communication addresses and control commands, see *7.4 Definition of Communication Data Address*.

Master Command		Slave Response	
ADDR	01H	ADDR	01H
CMD	06H	CMD	06H
Parameter address high bits	20H	Parameter address high bits	20H
Parameter address low bits	00H	Parameter address low bits	00H
Data content high bits	00H	Data content high bits	00H
Data content low bits	02H	Data content low bits	02H
CRC high bits	03H	CRC high bits	03H
CRC low bits	CBH	CRC low bits	CBH

www.Farazcontrol.com واحد فروش: ۰۹۱۲۹۲۷۵۱۵۹ (مهندس رمضان زاده)

6.2 Set Frequency Reference

The AC drive provides the following four methods to output the required frequency reference:

- Main frequency reference
- Auxiliary frequency reference
- Main & auxiliary calculation
- Command source + frequency reference setting channel

6.2.1 Set Main Frequency Reference

Main frequency reference has nine setting channels.

F0-03 selects a required channel to set the main frequency reference, described in the following figure.

Function Code	Parameter Name	Setting Range	Default
F0-03	Main frequency reference setting channel selection	0: Digital setting (non-retentive at power down) 1: Digital setting (retentive at power down) 2: AI1 3: AI2 4: AI3 5: Pulse reference 6: Multi-reference 7: Simple PLC 8: PID reference 9: Serial comms.	0

www.Farazcontrol.com (مهندس رمضان زاده)۰۹۱۲۹۲۷۵۱۵۹ واحد فروش:

Figure 6-12 Select main frequency reference setting channel

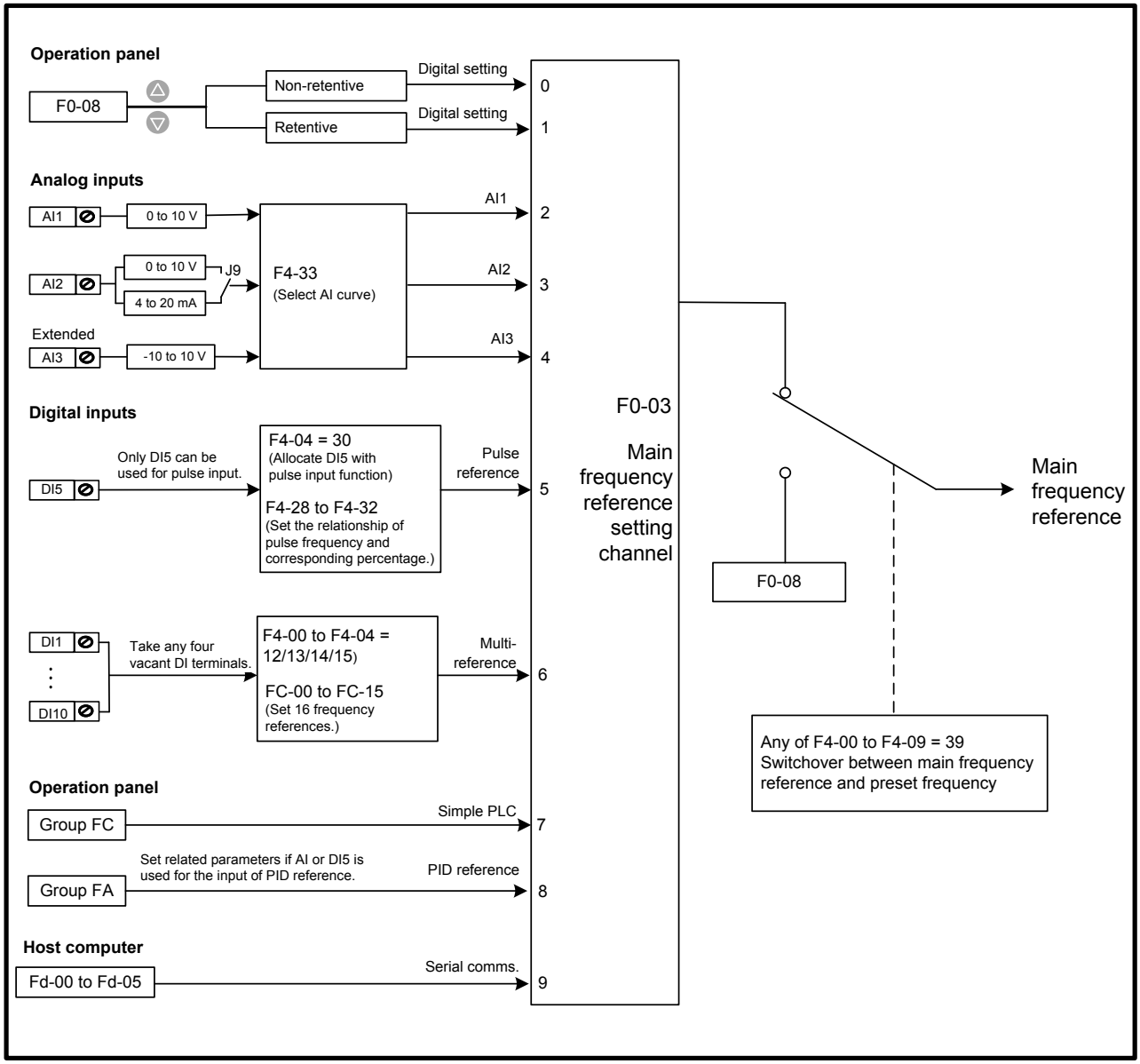

www.Farazcontrol.com واحد فروش: ۰۹۱۲۹۲۷۵۱۵۹ (مهندس رمضان زاده)

■ Digital Setting (Non-retentive at Power Down)

The initial value of frequency reference is F0-08 (Preset frequency). You can modify frequency reference by pressing △ and ▽ on the operating panel (or using the UP/DOWN function of input terminals).

When the AC drive is powered on again, frequency reference continues from the value of F0-08.

■ Digital Setting (Retentive at Power Down)

The initial value of frequency reference is F0-08 (Preset frequency). You can change frequency reference by pressing △ and ▽ on the operating panel (or using the UP/DOWN function of input terminals).

When the AC drive is powered on again, frequency reference continues from where it last reached.

Function Code	Parameter Name	Setting Range	Default
F0-08	Preset frequency	0.00 to max. frequency (F0-10)	50.00 Hz
F0-10	Max. frequency	50.00 to 500.00 Hz	50.00 Hz

Note	F0-23 (Retentive selection of digital setting frequency upon stop) determines whether to save frequency reference selection by pressing △ and ▽ or via the up/down function when the AC drive stops. It is not the same as F0-03 = 0 or 1, which determines whether to retain the setting on power-off.

Function Code	Parameter Name	Setting Range	Default
F0-23	Retentive selection of digital setting frequency upon stop	0: Not retentive 1: Retentive	50.00 Hz

F0-23 is valid only when frequency reference setting channel is digital setting.

- F0-23 = 0: Non-retentive

  The AC drive resumes frequency reference to the value set in F0-08 at stop. Frequency reference continues from the value of F0-08 at next power-on.

- F0-23 = 1: retentive

  The AC drive retains the frequency reference that was last reached at stop. Frequency reference continues from the retained value at next power-on.

  For example, F0-08 is set to 40 Hz and you increase it to 45 Hz by pressing △. If F0-23 = 0, The drive resumes frequency reference to 40 Hz after stop. If F0-23 = 1, frequency reference remains at 45 Hz after stop.

www.Farazcontrol.com واحد فروش: ۰۹۱۲۹۲۷۵۱۵۹ (مهندس رمضان زاده)

■ Analog Input

AI1 (0 to 10 V voltage input)

AI2 (0 to 10 V voltage input or 0 to 20 mA current input, determined by setting of jumper J9)

AI3 (-10 to 10 V voltage input)

Frequency reference is entered from an analog input (AI) terminal. To input frequency reference from an AI terminal, do as follows:

Step 1: Set AI curve.

The AC drive provides five curves to indicate mapping relationship between the input voltage entered from AI1, AI2 or AI3 and target frequency. Three of the curves have a linear (point-point) correspondence, and two have four-point correspondence. You can set curves via parameters F4-13 to F4-27 and parameters in group A6, and select curves for AI1, AI2 and AI3 in F4-33.

Here takes AI curve 1 as an example to describe how to set AI curve. AI curve 1 is set by F4-13 to F4-16.

Figure 6-13 Set AI curve 1

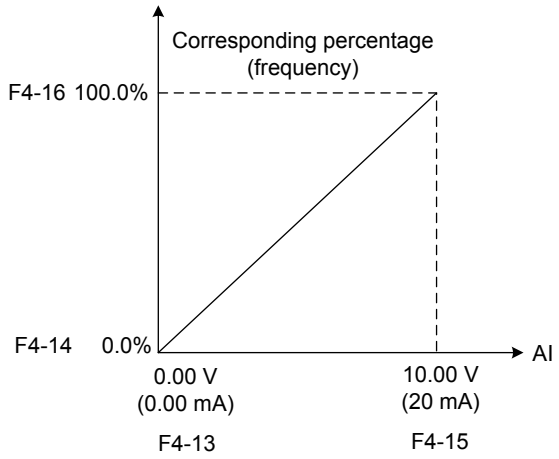

F4-13 to F4-16: These five parameters set relationship between analog input and corresponding percentage.

- When analog input voltage exceeds the value of F4-15, the AC drive uses the maximum value.
- When analog input voltage is below the value of F4-13, the AC drive uses the minimum value or 0.0%, determined by the setting of F4-34.

Function Code	Parameter Name	Setting Range	Default
F4-13	AI curve 1 min. input	0.00 V to F4-15	0.00 V
F4-14	Corresponding percentage of AI curve 1 min. input	-100.00% to 100.0%	0.0%
F4-15	AI curve 1 max. input	F4-13 to 10.00 V	10.00 V
F4-16	Corresponding percentage of AI curve 1 max. input	-100.00% to 100.0%	100.0%

Note	When an AI terminal is used for input of frequency reference, 100% of voltage/current input corresponds to the value of F0-10 (max. frequency). If analog input is current, 1 mA current is equal to 0.5 V voltage.

www.Farazcontrol.com واحد فروش: ۰۹۱۲۹۲۷۵۱۵۹ (مهندس رمضان زاده)

F4-18 to F4-21 and F4-3 to F4-26 define AI curve 2 and AI curve 3, respectively. AI curve 2 and AI curve 3 have the same function and usage as AI curve 1 does. Refer to *Step 1: Set AI curve*.

Figure 6-14 Set AI curve 2

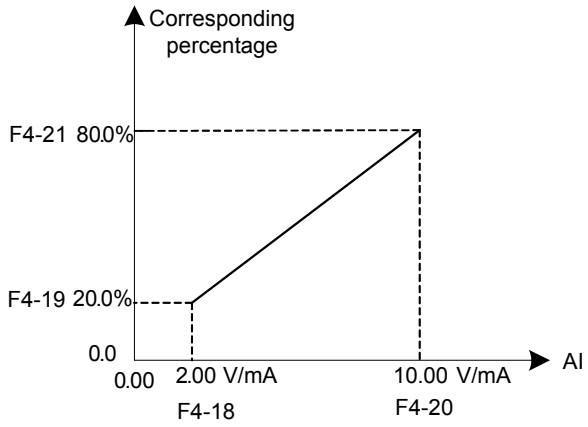

Function Code	Parameter Name	Setting Range	Default
F4-18	AI curve 2 min. input	0.00 V to F4-20	0.00 V
F4-19	Corresponding percentage of AI curve 2 min. input	-100.00% to 100.0%	0.0%
F4-20	AI2 curve max. input	F4-18 to 10.00 V	10.00 V
F4-21	Corresponding percentage of AI curve 2 max. input	-100.00% to 100.0%	100.0%
F4-23	AI curve 3 min. input	0.00 V to F4-25	0.00 V
F4-24	Corresponding percentage of AI curve 3 min. input	-100.00% to 100.0%	0.0%
F4-25	AI curve 3 max. input	F4-23 to 10.00 V	10.00 V
F4-26	Corresponding percentage of AI curve 3 max. input	-100.00% to 100.0%	100.0%

www.Farazcontrol.com واحد فروش: ۰۹۱۲۹۲۷۵۱۵۹ (مهندس رمضان زاده)

A6-00 to A6-15 define AI curve 4 and AI curve 5, which have the similar function of AI curve 1 to AI curve 3. AI curve 1 to AI curve 3 are linear correspondence and AI curve 4 and AI curve 5 are four-point correspondence.

Figure 6-15 Set AI curve 4 and AI curve 5

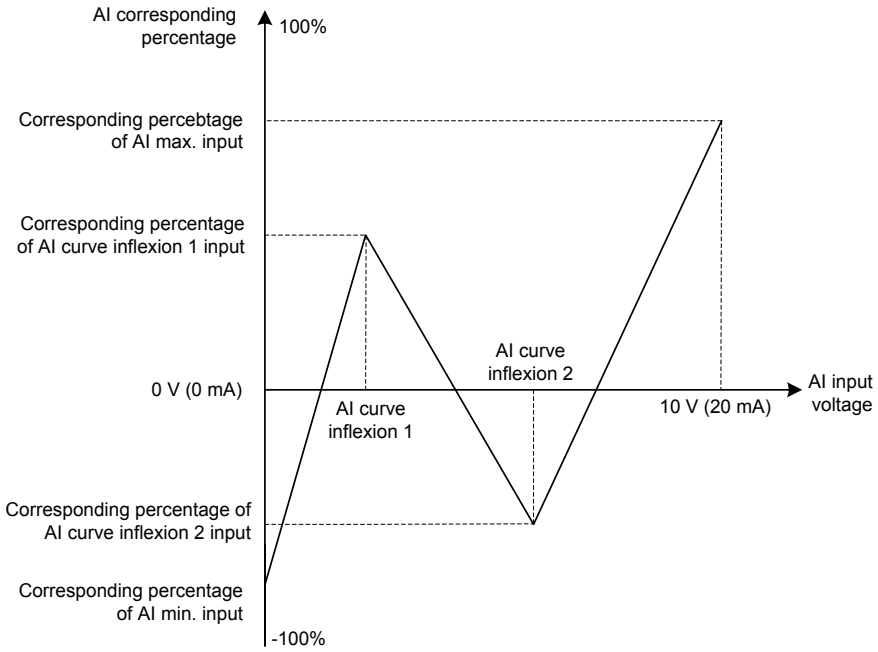

Note	When setting AI curve 4 and AI curve 5, curve min. input, inflexion 1 voltage, inflexion 2 voltage and curve max. input increase successively.

Function Code	Parameter Name	Setting Range	Default
A6-00	AI curve 4 min. input	-10.00 V to A6-02	0.00 V
A6-01	Corresponding percentage of AI curve 4 min. input	-100.0% to 100.0%	0.0%
A6-02	AI curve 4 inflexion 1 input	A6-00 to A6-04	3.00 V
A6-03	Corresponding percentage of AI curve 4 inflexion 1 input	-100.0% to 100.0%	30.0%
A6-04	AI curve 4 inflexion 1 input	A6-02 to A6-06	6.00 V
A6-05	Corresponding percentage of AI curve 4 inflexion 1 input	-100.0% to 100.0%	60.0%
A6-06	AI curve 4 max. input	A6-06 to 10.00 V	10.00 V
A6-07	Corresponding percentage of AI curve 4 max. input	-100.0% to 100.0%	100.0%
A6-08	AI curve 5 min. input	-10.00 V to A6-10	0.00 V
A6-09	Corresponding percentage of AI curve 5 min. input	-100.0% to 100.0%	0.0%
A6-10	AI curve 5 inflexion 1 input	A6-08 to A6-12	3.00 V
A6-11	Corresponding percentage of AI curve 5 inflexion 1 input	-100.0% to 100.0%	30.0%
A6-12	AI curve 5 inflexion 1 input	A6-10 to A6-14	6.00 V
A6-13	Corresponding percentage of AI curve 5 inflexion 1 input	-100.0% to 100.0%	60.0%
A6-14	AI curve 5 max. input	A6-14 to 10.00 V	10.00 V
A6-15	Corresponding percentage of AI curve 5 max. input	-100.0% to 100.0%	100.0%

www.Farazcontrol.com واحد فروش: ۰۹۱۲۹۲۷۵۱۵۹ (مهندس رمضان زاده)

Step 2: Select a required curve for AI terminal.

F4-33 selects curve of AI1, AI2 and AI3 from the five curves, respectively. Curve 1, curve 2 and curve 3 are 2-point curves, set in group F4. Curve 4 and curve 5 are 4-point curves, set in group A6.

The drive provides two AI terminals (AI1, AI2). An extra AI terminal (AI3) is provided by the I/O extension card.

Function Code	Parameter Name	Setting Range	Default
F4-33	AI curve selection	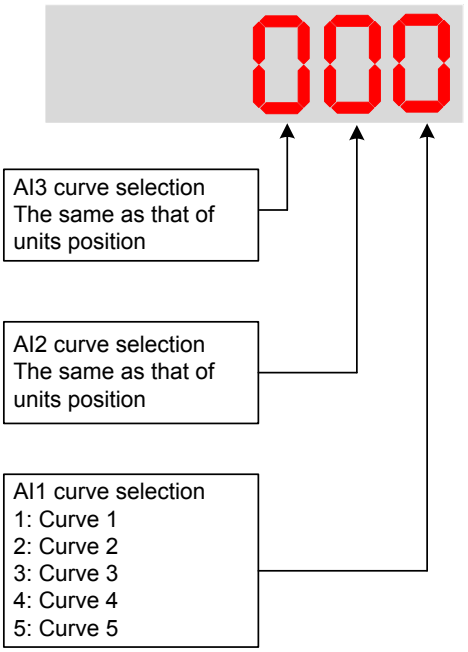	321
F4-17	AI1 filter time	0.00s to 10.00s	0.10s
F4-22	AI2 filter time	0.00s to 10.00s	0.10s
F4-27	AI3 filter time	0.00s to 10.00s	0.10s

F4-17, F4-22 and F4-27 set AI software filter time. If analog input is liable to interference, increase this parameter to stabilize detected analog input. But too large a setting slows response of analog detection. Set it correctly based on actual conditions.

Step 3: Select a required AI terminal as main frequency reference setting channel.

The AC drive provides two AI terminals (AI1, AI2). An extra AI terminal (AI3) is provided by the I/O extension card.

Here takes each AI terminal as examples to show how to use AI terminal to control main frequency reference.

Example 1: To make voltage input at AI1 to control frequency reference and correspond 2 to 10 V to 10 to 40 Hz, the settings are shown in the following figure.

www.Farazcontrol.com واحد فروش: ۰۹۱۲۹۲۷۵۱۵۹ (مهندس رمضان زاده)

Figure 6-16 Voltage input at AI1 to control frequency reference

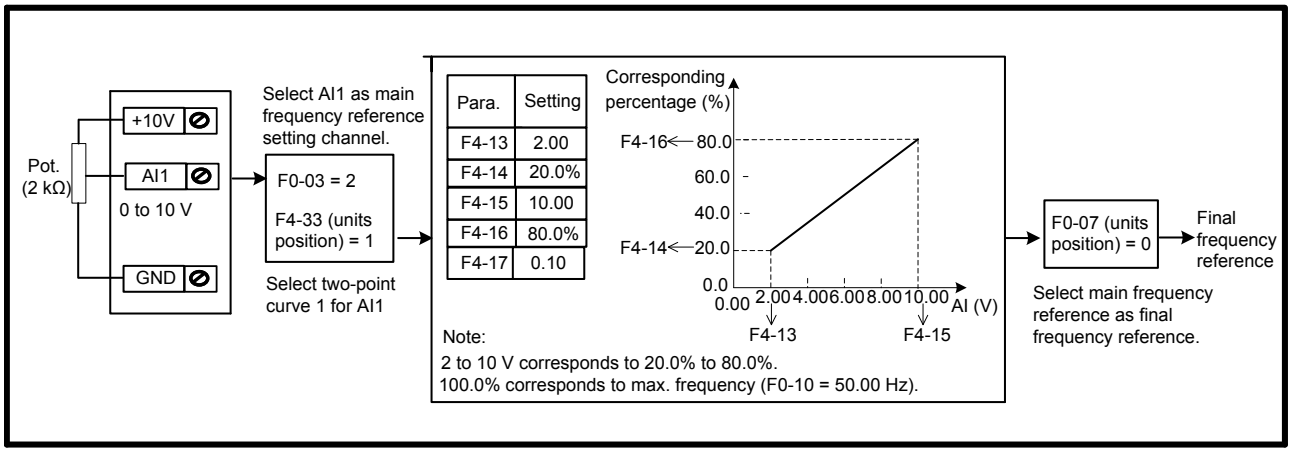

Example 2: On the condition that current input from AI2 is available, if 0 to 20 mA is input, it corresponds to voltage input of 0 to 10 V. If 4 to 20 mA is input, it corresponds to voltage input of 2 to 10 V.

To make current input at AI2 to control frequency reference and correspond 4 to 20 mA to 0 to 50 Hz, the settings are shown in the following figure.

Figure 6-17 Current input at AI2 to control frequency reference

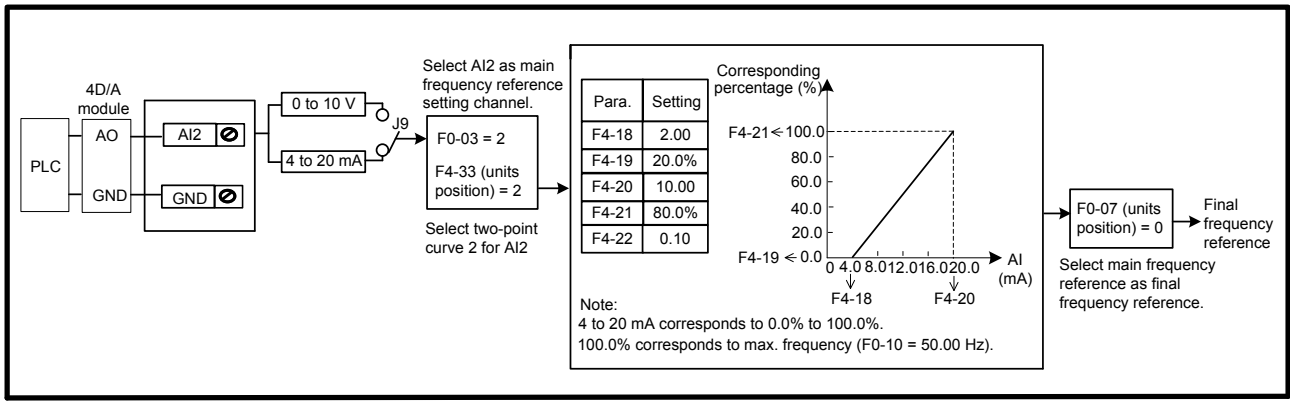

Example 3: To make voltage input at AI3 to control frequency reference and correspond 2 to 10 V to 10 to 50 Hz, the settings are shown in the following figure.

Figure 6-18 Voltage input at AI3 to control frequency reference

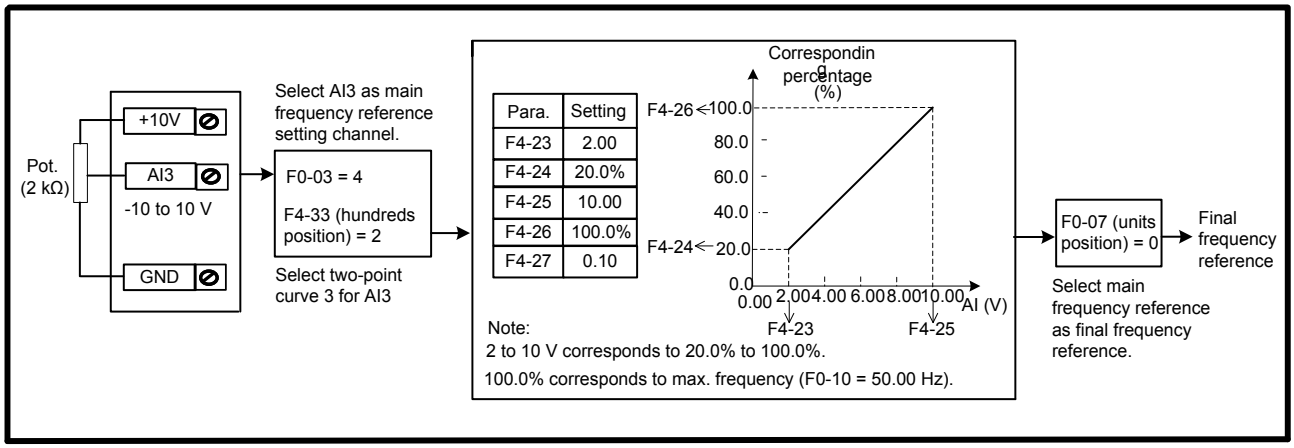

www.Farazcontrol.com واحد فروش: ۰۹۱۲۹۲۷۵۱۵۹ (مهندس رمضان زاده)

■ Pulse Reference (DI5)

Frequency reference is input by means of DI5 (high-speed pulse). Signal specification of pulse reference is 9 to 30 V (voltage range) and 0 to 100 kHz (frequency range). The corresponding value 100% of pulse reference corresponds to the value of F0-10 (max. frequency).

Note	Main frequency reference set via pulse reference and pulse output of the FM terminal (F5-00 = 1) cannot be used simultaneously.

F4-28 to F4-32 set relationship between pulse input (from DI5 only) and corresponding percentage. It has the same function and usage as AI curve 1 does. Refer to *Step 1: Set AI curve.*

Function Code	Parameter Name	Setting Range	Default
F4-28	Pulse min. input	0.00 kHz to F4-30	0.00 kHz
F4-29	Corresponding percentage of pulse min. input	-100.00% to 100.0%	0.0%
F4-30	Pulse max. input	F4-28 to 50.00 kHz	50.00 kHz
F4-31	Corresponding percentage of pulse max. input	-100.00% to 100.0%	100.0%
F4-32	Pulse filter time	0.00s to 10.00s	0.10s

Figure 6-19 Pulse input at DI5 to control frequency reference

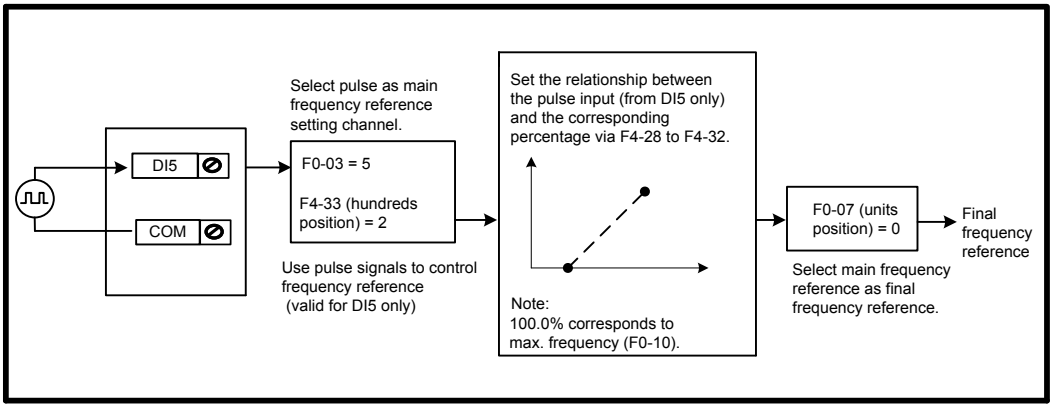

www.Farazcontrol.com واحد فروش: ۰۹۱۲۹۲۷۵۱۵۹ (مهندس رمضان زاده)

■ Multi-reference

Multi-reference is a relative value and is a percentage of F0-10 (max. frequency). Whether the setting is positive or negative determines drive running direction. If negative, it indicates that the AC drive runs in reverse direction.

Multiple frequency references are set in group FC, as listed in the following table.

Function Code	Parameter Name	Setting Range	Default
FC-00	Reference 0	-100.0% to 100.0%	0.0%
FC-01	Reference 1	-100.0% to 100.0%	0.0%
FC-02	Reference 2	-100.0% to 100.0%	0.0%
FC-03	Reference 3	-100.0% to 100.0%	0.0%
FC-04	Reference 4	-100.0% to 100.0%	0.0%
FC-05	Reference 5	-100.0% to 100.0%	0.0%
FC-06	Reference 6	-100.0% to 100.0%	0.0%
FC-07	Reference 7	-100.0% to 100.0%	0.0%
FC-08	Reference 8	-100.0% to 100.0%	0.0%
FC-09	Reference 9	-100.0% to 100.0%	0.0%
FC-10	Reference 10	-100.0% to 100.0%	0.0%
FC-11	Reference 11	-100.0% to 100.0%	0.0%
FC-12	Reference 12	-100.0% to 100.0%	0.0%
FC-13	Reference 13	-100.0% to 100.0%	0.0%
FC-14	Reference 14	-100.0% to 100.0%	0.0%
FC-15	Reference 15	-100.0% to 100.0%	0.0%

In multi-reference mode, combinations of different DI terminal states correspond to different frequency references. The AC drive supports a maximum of 16 references implemented by 16 state combinations of four DI terminals (allocated with functions 12 to 15) in Group FC.

If a DI terminal is used for the multi-reference function, you need to set related parameters in group F4.

The below diagram Figure 6-20 shows an example of 4 multi-frequency settings.

Figure 6-20 Using multi-reference to control frequency reference

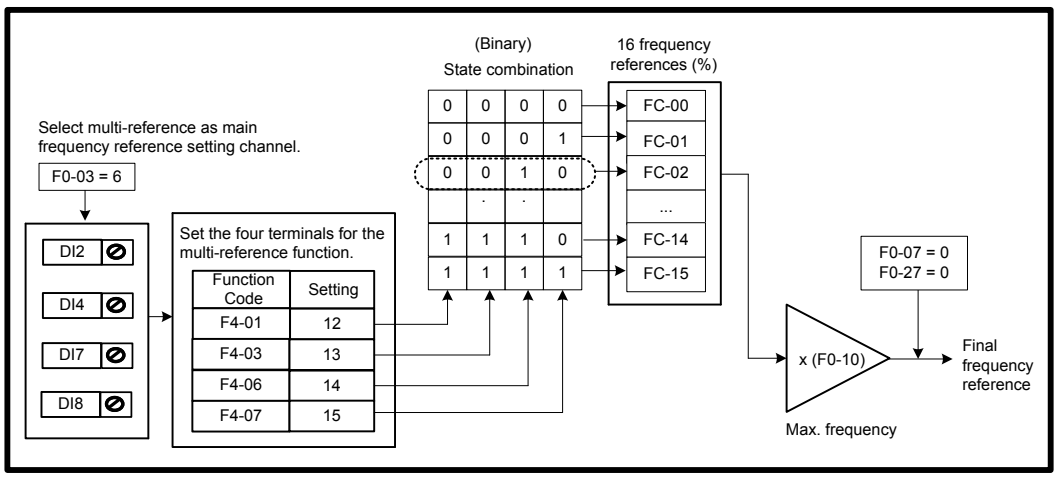

www.Farazcontrol.com واحد فروش: ۰۹۱۲۹۲۷۵۱۵۹ (مهندس رمضان زاده)

The four multi-reference terminals have 16 state combinations, corresponding to 16 references, as listed in the following table.

K4	K3	K2	K1	Reference Setting	Corresponding Pr.
OFF	OFF	OFF	OFF	Reference 0	FC-00
OFF	OFF	OFF	ON	Reference 1	FC-01
OFF	OFF	ON	OFF	Reference 2	FC-02
OFF	OFF	ON	ON	Reference 3	FC-03
OFF	ON	OFF	OFF	Reference 4	FC-04
OFF	ON	OFF	ON	Reference 5	FC-05
OFF	ON	ON	OFF	Reference 6	FC-06
OFF	ON	ON	ON	Reference 7	FC-07
ON	OFF	OFF	OFF	Reference 8	FC-08
ON	OFF	OFF	ON	Reference 9	FC-09
ON	OFF	ON	OFF	Reference 10	FC-10
ON	OFF	ON	ON	Reference 11	FC-11
ON	ON	OFF	OFF	Reference 12	FC-12
ON	ON	OFF	ON	Reference 13	FC-13
ON	ON	ON	OFF	Reference 14	FC-14
ON	ON	ON	ON	Reference 15	FC-15

Note	Besides multi-speed function, the multi-reference can be also used as PID reference source or voltage source for V/F separation.

6

■ Simple PLC

When simple PLC is used to control frequency reference, the AC drive running frequency can be selected from any of the 16 frequency reference set points.

Figure 6-21 Using simple PLC to control frequency reference

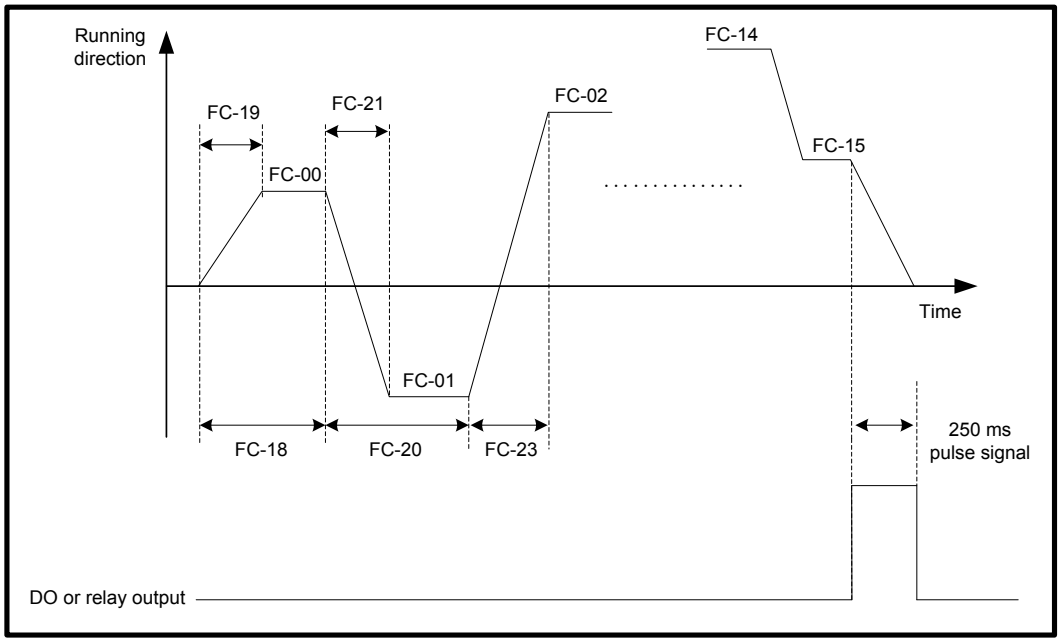

www.Farazcontrol.com واحد فروش: ۰۹۱۲۹۲۷۵۱۵۹ (مهندس رمضان زاده)

You can set holding time and acceleration/deceleration time of 16 frequency references in FC-18 to FC-49.

Function Code	Parameter Name	Setting Range	Default
FC-18	Running time of simple PLC reference 0	0.0s (h) to 6553.5s (h)	0.0s (h)
FC-19	Acceleration/deceleration time of simple PLC reference 0	0 to 3	0
FC-20	Running time of simple PLC reference 1	0.0s (h) to 6553.5s (h)	0.0s (h)
FC-21	Acceleration/deceleration time of simple PLC reference 1	0 to 3	0
FC-22	Running time of simple PLC reference 2	0.0s (h) to 6553.5s (h)	0.0s (h)
FC-23	Acceleration/deceleration time of simple PLC reference 2	0 to 3	0
FC-24	Running time of simple PLC reference 3	0.0s (h) to 6553.5s (h)	0.0s (h)
FC-25	Acceleration/deceleration time of simple PLC reference 3	0 to 3	0
FC-26	Running time of simple PLC reference 4	0.0s (h) to 6553.5s (h)	0.0s (h)
FC-27	Acceleration/deceleration time of simple PLC reference 4	0 to 3	0
FC-28	Running time of simple PLC reference 5	0.0s (h) to 6553.5s (h)	0.0s (h)
FC-29	Acceleration/deceleration time of simple PLC reference 5	0 to 3	0
FC-30	Running time of simple PLC reference 6	0.0s (h) to 6553.5s (h)	0.0s (h)
FC-31	Acceleration/deceleration time of simple PLC reference 6	0 to 3	0
FC-32	Running time of simple PLC reference 7	0.0s (h) to 6553.5s (h)	0.0s (h)
FC-33	Acceleration/deceleration time of simple PLC reference 7	0 to 3	0
FC-34	Running time of simple PLC reference 8	0.0s (h) to 6553.5s (h)	0.0s (h)
FC-35	Acceleration/deceleration time of simple PLC reference 8	0 to 3	0
FC-36	Running time of simple PLC reference 9	0.0s (h) to 6553.5s (h)	0.0s (h)
FC-37	Acceleration/deceleration time of simple PLC reference 9	0 to 3	0
FC-38	Running time of simple PLC reference 10	0.0s (h) to 6553.5s (h)	0.0s (h)
FC-39	Acceleration/deceleration time of simple PLC reference 10	0 to 3	0
FC-40	Running time of simple PLC reference 11	0.0s (h) to 6553.5s (h)	0.0s (h)

www.Farazcontrol.com واحد فروش: ۰۹۱۲۹۲۷۵۱۵۹ (مهندس رمضان زاده)

Function Code	Parameter Name	Setting Range	Default
FC-41	Acceleration/deceleration time of simple PLC reference 11	0 to 3	0
FC-42	Running time of simple PLC reference 12	0.0s (h) to 6553.5s (h)	0.0s (h)
FC-43	Acceleration/deceleration time of simple PLC reference 12	0 to 3	0
FC-44	Running time of simple PLC reference 13	0.0s (h) to 6553.5s (h)	0.0s (h)
FC-45	Acceleration/deceleration time of simple PLC reference 13	0 to 3	0
FC-46	Running time of simple PLC reference 14	0.0s (h) to 6553.5s (h)	0.0s (h)
FC-47	Acceleration/deceleration time of simple PLC reference 14	0 to 3	0
FC-48	Running time of simple PLC reference 15	0.0s (h) to 6553.5s (h)	0.0s (h)
FC-49	Acceleration/deceleration time of simple PLC reference 15	0 to 3	0

FC-16 determines the simple PLC running mode.

Function Code	Parameter Name	Setting Range	Default
FC-16	Simple PLC running mode	0: Stop after running one cycle 1: Keep final values after running one cycle 2: Repeat after running one cycle	0

- FC-16 = 0: Stop after running one cycle

  The AC drive stops after running one cycle, and will not start until it receives a new RUN command.

- FC-16 = 1: Keep final values after running one cycle

  The AC drive keeps final running frequency and direction after running one cycle.

- FC-16 = 2: Repeat after running one cycle

  The AC drive automatically starts another cycle after running one cycle, and will not stop until receiving stop command.

www.Farazcontrol.com واحد فروش: ۰۹۱۲۹۲۷۵۱۵۹ (مهندس رمضان زاده)

FC-17 determines whether the running data is retentive at power down or at stop.

If retentive, the running data is memorized at power down or at stop and the AC drive will continue to run from the memorized data at next power-on.

If not retentive, the AC drive runs from the first simple PLC reference at next power-on.

Function Code	Parameter Name	Setting Range	Default
FC-17	Simple PLC retentive selection	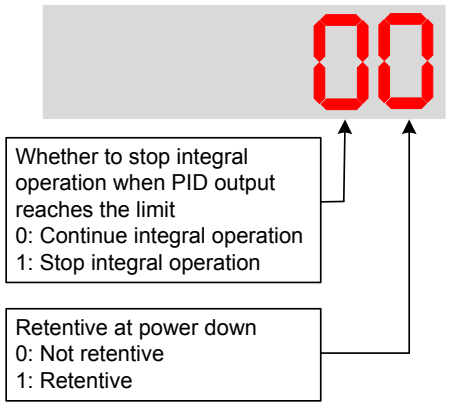	00

FC-50 sets running time unit in simple PLC mode. FC-51 selects the setting channel of reference 0.

Function Code	Parameter Name	Setting Range	Default
FC-50	Time unit of simple PLC running	0: s (second) 1: h (hour)	0
FC-51	Reference 0 source	0: Set by FC-00 1: AI1 2: AI2 3: AI3 4: Pulse reference 5: PID 6: Set by preset frequency (F0-08), modified via terminal UP/DOWN	0

Note	Simple PLC can be either frequency reference setting channel or voltage reference setting channel for V/F separation.

www.Farazcontrol.com واحد فروش: ۰۹۱۲۹۲۷۵۱۵۹ (مهندس رمضان زاده)

■ PID Reference

The PID (Proportional + Integral + Derivative) function uses system feedback for closed-loop control of variables such as flow, pressure, temperature, and so on.

The purpose of PID control is to keep the drive output as close as possible to a desired reference via PID adjustment.

- Proportional gain (Kp1)

  A large value tends to reduce present error, but too large setting will cause system oscillation.

- Integral time (Ti1)

  The shorter the integral time is, the faster the error will be predicted. But too short setting will cause overshoot or system oscillation.

- Derivative time (Td1)

  The longer the derivative time is, the faster the system will respond to the error. But too longer setting will cause vibration.

Figure 6-22 Function block diagram of the PID control

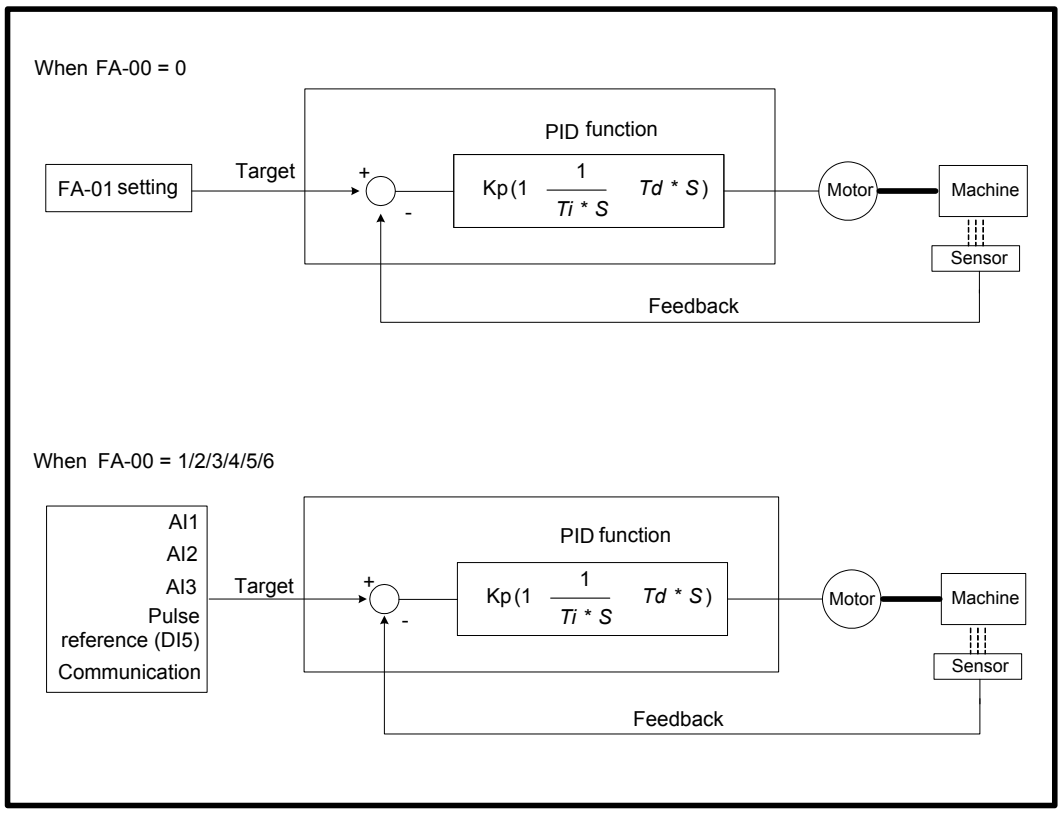

www.Farazcontrol.com واحد فروش: ۰۹۱۲۹۲۷۵۱۵۹ (مهندس رمضان زاده)

Figure 6-23 PID control function diagram

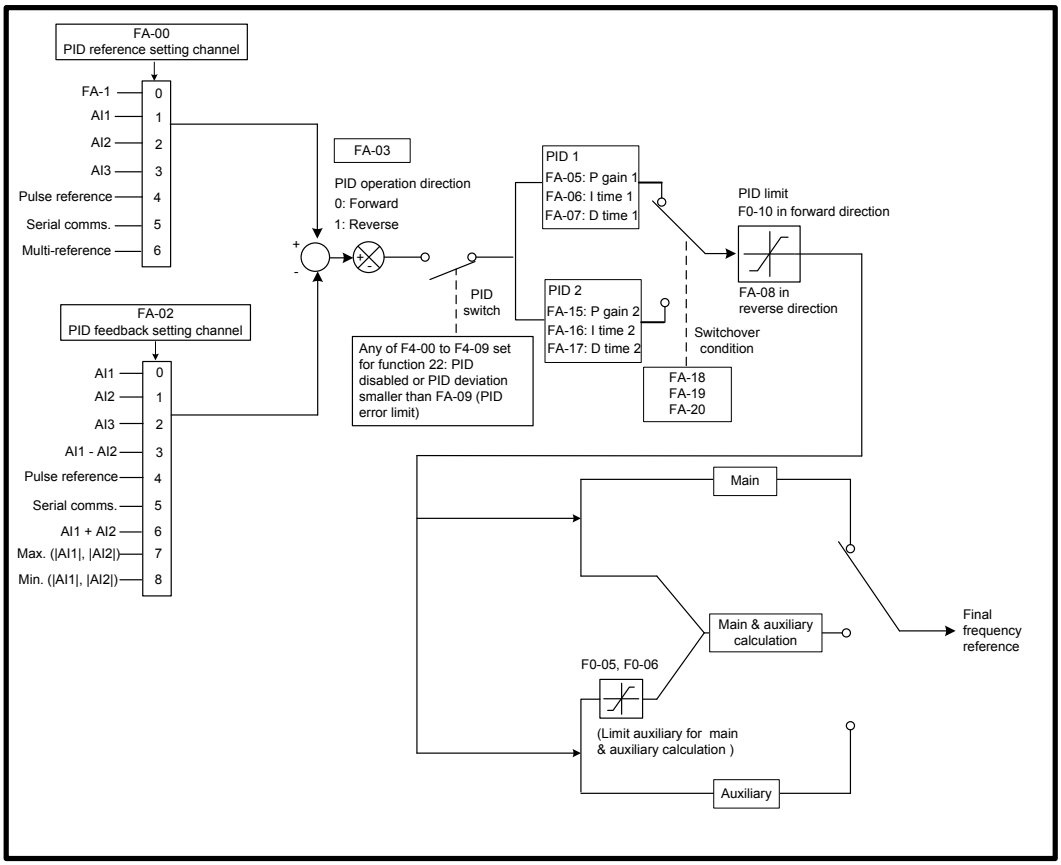

Function Code	Parameter Name	Setting Range	Default
FA-00	PID reference setting channel	0: Set by FA-01 1: AI1 2: AI2 3: AI3 4: Pulse reference (DI5) 5: Serial comms. 6: Multi-reference	0
FA-01	PID digital setting	0.0% to 100.0%	50.0%
FA-02	PID feedback setting channel	0: AI1 1: AI2 2: AI3 3: AI1 - AI2 4: Pulse reference (DI5) 5: Serial comms. 6: AI1 + AI2 7: Max. (|AI1|, |AI2|) 8: Min. (|AI1|, |AI2|)	0

FA-00 and FA-01 set input channel of PID reference. PID reference is a relative value and ranges from 0.0% to 100.0%.

FA-02 sets PID feedback channel. PID feedback is a relative value and ranges from 0.0% to 100.0%.

www.Farazcontrol.com واحد فروش: ۰۹۱۲۹۲۷۵۱۵۹ (مهندس رمضان زاده)

Function Code	Parameter Name	Setting Range	Default
FA-03	PID operation direction	0: Forward 1: Reverse	0
FA-04	PID reference and feedback range	0 to 65535	1000
FA-05	Proportional gain Kp1	0.0 to 100.0	20.0
FA-06	Integral time Ti1	0.01s to 10.00s	2.00s
FA-07	Differential time Td1	0.00s to 10.000s	0.000s

FA-03 sets direction of PID operation. It is influenced by DI function 35 "PID operation direction reverse".

- FA-03 = 0: Forward

  When PID feedback is smaller than PID reference, the AC drive increases output frequency. The winding tension control requires forward PID operation.

- FA-03 = 1: Reverse

  When PID feedback is smaller than PID reference, the AC drive decreases output frequency. The unwinding tension control requires reverse PID operation.

FA-04: It is a non-dimensional parameter and is used for calculating display of PID reference (U0-15) and PID feedback (U0-16).

- U0-15 = PID reference (percentage) x FA-04
- U0-16 = PID feedback (percentage) x FA-04

For example, if FA-04 is set to 2000 and PID reference is 100.0%, display of PID reference (U0-15) is 2000.

www.Farazcontrol.com واحد فروش: ۰۹۱۲۹۲۷۵۱۵۹ (مهندس رمضان زاده)

Function Code	Parameter Name	Setting Range	Default
FA-08	PID output limit in reverse direction	0.00 Hz to max. frequency	2.00 Hz

FA-08: In some applications a high PID output in reverse direction may introduce adverse reactions and so a limit need to be applied".

- When frequency reference setting channel is purely PID reference, FA-08 limits the output in reverse direction.
- When frequency reference setting channel is main frequency reference + PID reference, FA-08 limits the calculation result in reverse direction.

Function Code	Parameter Name	Setting Range	Default
FA-09	PID error limit	0.0% to 100.0%	0.0%

FA-09: This function helps to make the AC drive output accurate and stable.

Function Code	Parameter Name	Setting Range	Default
FA-10	PID differential limit	0.00% to 100.00%	0.10%

FA-10 applies a limit to PID differential output as a large output can cause excessive system oscillation.

Function Code	Parameter Name	Setting Range	Default
FA-11	PID reference change time	0.00s to 650.00s	0.00s

FA-11 sets time it takes PID reference to change from 0.0% to 100.0%. PID reference changes linearly based on the time set in this parameter, reducing negative impact of sudden PID reference change.

Function Code	Parameter Name	Setting Range	Default
FA-12	PID feedback filter time	0.00s to 60.00s	0.00s
FA-13	PID output filter time	0.00s to 60.00s	0.00s

FA-12 filters the PID feedback, which helps to lower interference on PID feedback but slows system response performance.

FA-13 filters the PID output frequency, which helps to drop off mutation of the AC drive output frequency but slows system response performance.

www.Farazcontrol.com واحد فروش: ۰۹۱۲۹۲۷۵۱۵۹ (مهندس رمضان زاده)

Function Code	Parameter Name	Setting Range	Default
FA-15	Proportional gain Kp2	0.0 to 100.0	20.0
FA-16	Integral time Ti2	0.01s to 10.00s	2.00s
FA-17	Differential time Td2	0.000s to 10.000s	0.000s
FA-18	PID parameter switchover condition	0: No switchover 1: Switchover via DI 2: Auto switchover based on PID error 3: Auto switchover based on running frequency	0
FA-19	PID error 1 for auto switchover	0.0% to FA-20	20.0%
FA-20	PID error 2 for auto switchover	FA-19 to 100.0%	80.0%

FA-15 to FA-20: On some applications, switchover to another set of PID parameters may be required to fine tune the overall performance as load conditions can vary during the different machine cycles.

Switchover can be implemented via a DI terminal or automatically implemented according to PID error level.

Figure 6-24 Switchover of two groups of PID parameters

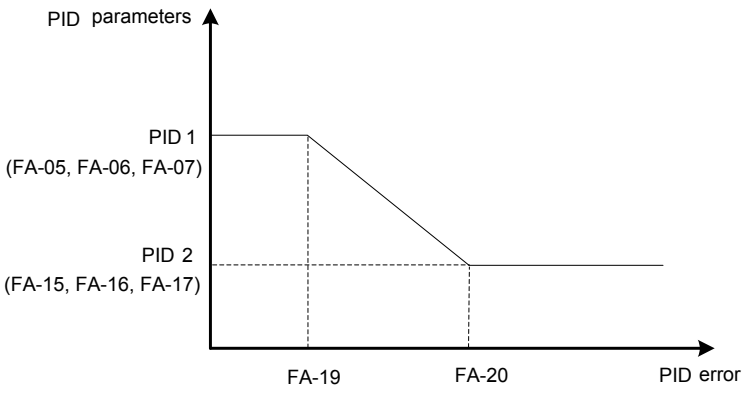

Function Code	Parameter Name	Setting Range	Default
FA-21	PID initial value	0.0% to 100.0%	0.0%
FA-22	PID initial value active time	0.00s to 650.00s	0.00s

FA-21 and FA-22: When the AC drive starts, the PID function turns active only after PID output is fixed at PID initial value (FA-21) for time set in FA-22.

Figure 6-25 The PID initial value function

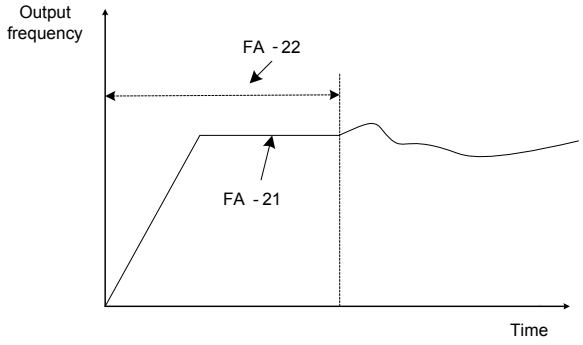

www.Farazcontrol.com واحد فروش: ۰۹۱۲۹۲۷۵۱۵۹ (مهندس رمضان زاده)

Function Code	Parameter Name	Setting Range	Default
FA-25	PID integral property	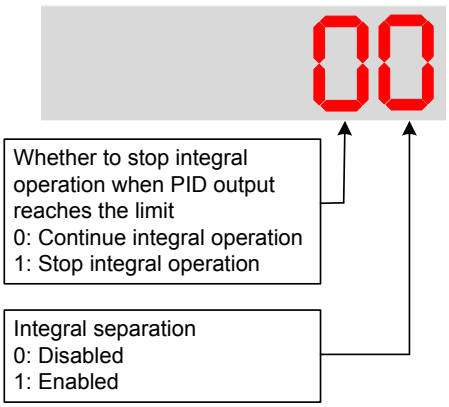	00

FA-25 determines whether to enable integral separation function and whether to stop integral operation when PID output reaches limit.

If integral separation is enabled, when a DI set for function 38 “PID integral disabled” is on, the integral operation becomes disabled. In this case, only the P gain and derivative time take effect.

If integral separation is disabled, no matter whether the DI set for function 38 "PID integral disabled" is on, integral separation is inactive.

Function Code	Parameter Name	Setting Range	Default
FA-26	Detection level of PID feedback loss	0.0%: No detection 0.1% to 100.0%	0.0%
FA-27	Detection time of PID feedback loss	0.0s to 20.0s	0.0s

FA-26 and FA-27 define the PID feedback loss detection function. When PID feedback is smaller than the value set in FA-26 for time set in FA-27, AC drive detects Err31 and acts as selected in ten thousands position in F9-49.

Function Code	Parameter Name	Setting Range	Default
FA-28	Selection of PID operation at stop	0: Disabled 1: Enabled	0

FA-28: This function parameter determines whether to continue PID operation when the AC drive stops.

■ Serial Comms.

We have the serial communications options, Modbus, Profibus-DP, CANlink and CANopen.

F0-28 has to be set correctly to engage the selected serial communication card if Modbus, Profibus-DP or CANopen is selected. F0-28 need not be set if CANlink is selected.

Function Code	Parameter Name	Setting Range	Default
F0-28	Serial port communication protocol	0: Modbus protocol 1: PROFIBUS-DP protocol or CANopen protocol	0

When the AC drive is controlled via serial communication, the host computer must send write command to the AC drive. The below Figure 6-26 uses the Modbus protocol to control frequency reference.

www.Farazcontrol.com واحد فروش: ۰۹۱۲۹۲۷۵۱۵۹ (مهندس رمضان زاده)

Figure 6-26 Use Modbus serial comms. to control frequency reference

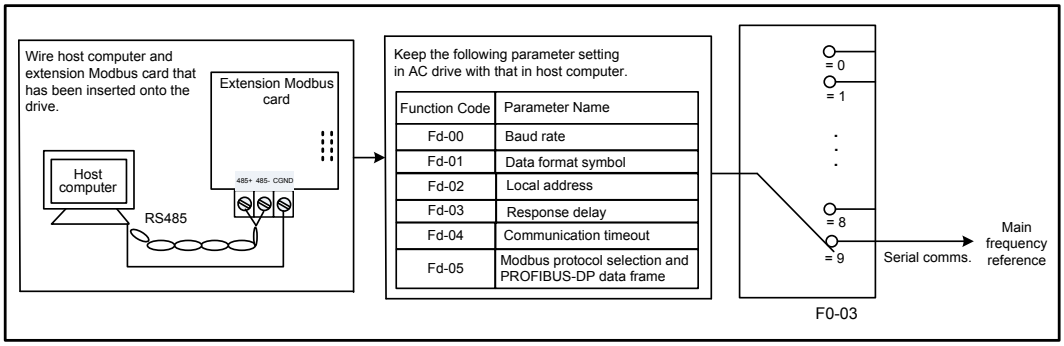

When the AC drive is controlled via communication, host computer must send write command to the AC drive. Here takes Modbus as an example to describe process of giving RUN command via serial communication.

To set frequency reference to 10000, host computer sends write command 01 06 10 00 27 10 97 36 (hexadecimal). In the command,

- 01H (settable): AC drive address
- 06H: write command
- 1000H: frequency reference address
- 2710H: frequency reference (converted into decimal 10000)
- 9736H: CRC check

Master Command		Slave Response	
ADDR	01H	ADDR	01H
CMD	06H	CMD	06H
Parameter address high bits	10H	Parameter address high bits	10H
Parameter address low bits	00H	Parameter address low bits	00H
Data content high bits	27H	Data content high bits	27H
Data content low bits	10H	Data content low bits	10H
CRC high bits	97H	CRC high bits	97H
CRC low bits	36H	CRC low bits	36H

Note	Frequency reference range set via communication is -10000 to 10000, corresponding to -100.00% to 100.00%. ● -100.00% corresponds to negative max. frequency. ● 0.00% corresponds to min. frequency. ● 100.00% corresponds to max. frequency. Suppose that F0-10 = 50 Hz, if frequency reference in the write command is 2710, converted into decimal 10000. The input frequency reference is 50 x 100% = 50 Hz.

www.Farazcontrol.com واحد فروش: ۰۹۱۲۹۲۷۵۱۵۹ (مهندس رمضان زاده)

6.2.2 Set Auxiliary Frequency Reference

Auxiliary frequency reference has the same nine setting modes as main frequency reference does.

F0-04 selects a proper channel to set auxiliary frequency reference.

Function Code	Parameter Name	Setting Range	Default
F0-04	Auxiliary frequency reference setting channel selection	0: Digital setting (non-retentive at power down) 1: Digital setting (retentive at power down) 2: AI1 3: AI2 4: AI3 5: Pulse reference 6: Multi-reference 7: Simple PLC 8: PID reference 9: Serial comms.	0

Figure 6-27 select a proper channel to set auxiliary frequency reference

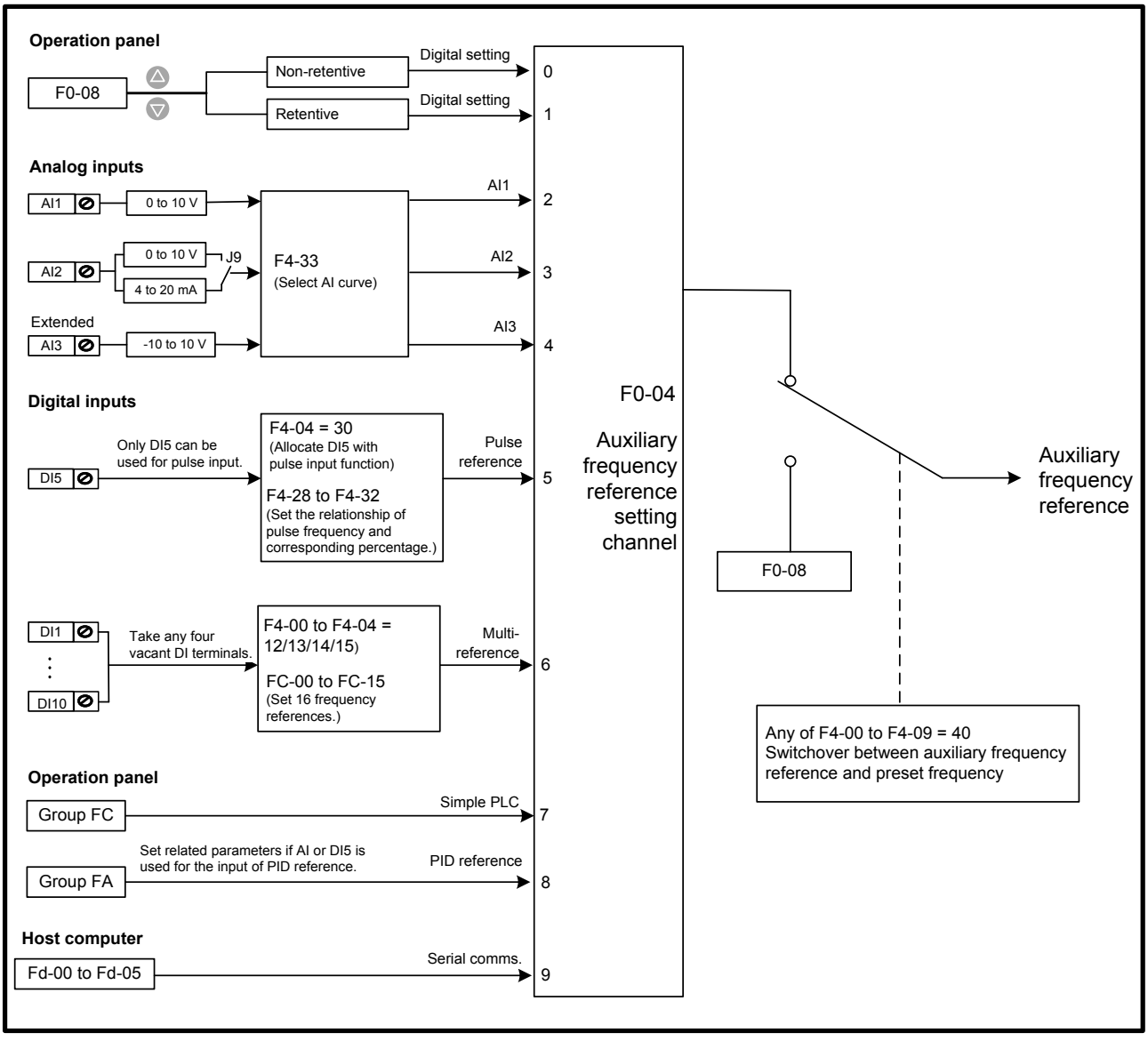

www.Farazcontrol.com واحد فروش: ۰۹۱۲۹۲۷۵۱۵۹ (مهندس رمضان زاده)

6.2.3 Main & Auxiliary Calculation

You can set relationship between final frequency reference and main frequency reference & auxiliary frequency reference in F0-07.

- Use main frequency reference as final frequency reference.
- Use auxiliary frequency reference as final frequency reference.
- Use main & auxiliary calculation as final frequency reference.
- Final frequency reference is switched over between main and auxiliary, between main and main & auxiliary calculation, and between auxiliary and main & auxiliary calculation through a DI set for function 18 (Frequency reference setting channel switchover).

Figure 6-28 Set final frequency reference

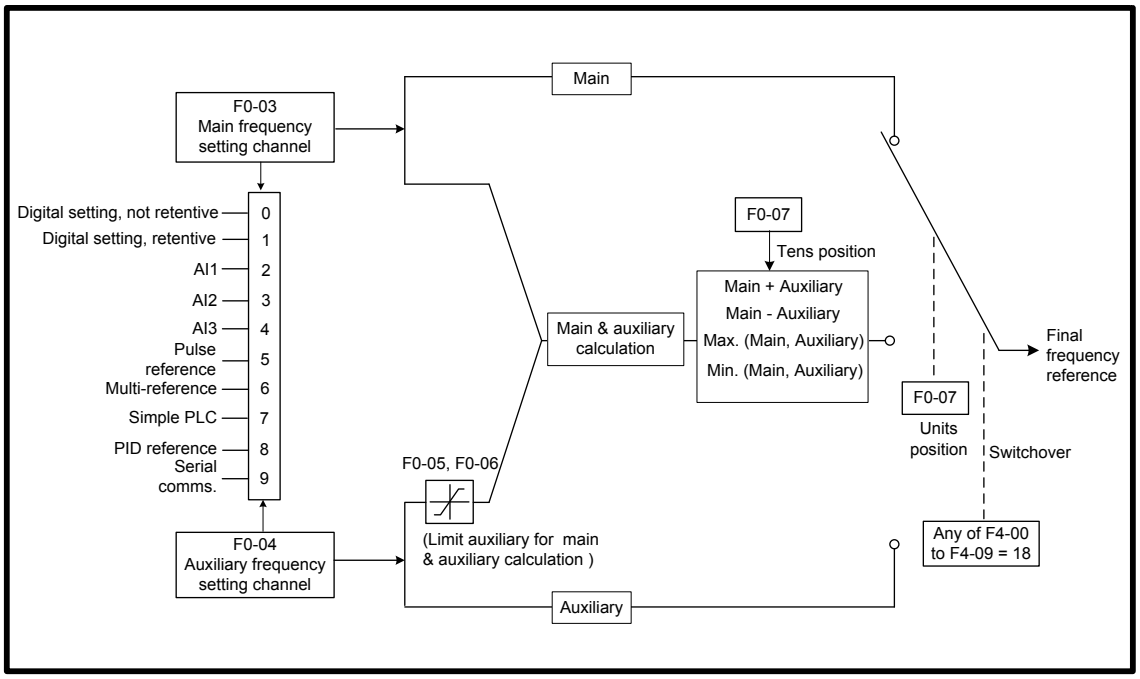

www.Farazcontrol.com واحد فروش: ۰۹۱۲۹۲۷۵۱۵۹ (مهندس رمضان زاده)

Function Code	Parameter Name	Setting Range	Default
F0-07	Final frequency reference setting selection	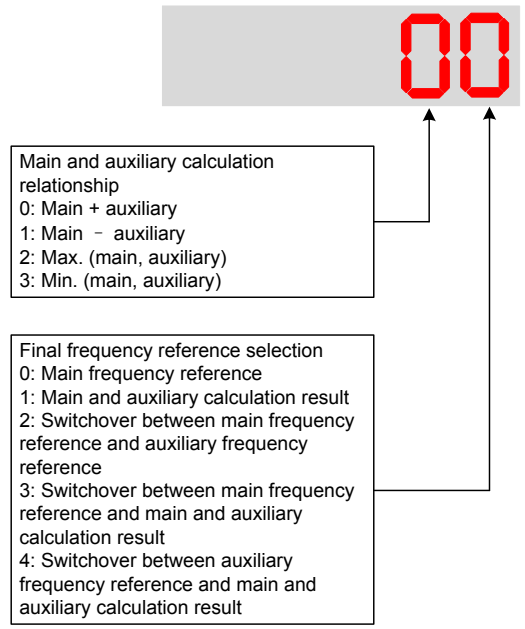	00
F0-05	Base value of range of auxiliary frequency reference for main and auxiliary superposition	0: Relative to maximum frequency 1: Relative to main frequency reference	0
F0-06	Range of auxiliary frequency reference for main and auxiliary superposition	0% to 150%	100%

When main frequency reference and auxiliary frequency reference are used for calculation (final frequency reference is set by "main and auxiliary calculation"), pay attention to the following aspects:

- If auxiliary frequency reference is digital setting, preset frequency (F0-08) does not take effect. You can directly adjust auxiliary frequency reference by pressing keys △ and ▽ on the operating panel (or using the UP/DOWN function of input terminals) based on main frequency reference.
- If auxiliary frequency reference is set via analog input (AI1, AI2 and AI3) or pulse reference, 100% of the input corresponds to range of the auxiliary frequency reference (set in F0-05 and F0-06). This is valid for main and auxiliary calculation.
- Main frequency reference and auxiliary frequency reference must not use the same setting channel. That is, F0-03 and F0-04 cannot be set to the same value.
- Main & auxiliary calculation can be used for closed-loop speed control. An example of this is to use main frequency reference to set a required frequency reference and to use auxiliary frequency reference for automatic adjustment. Closed-loop control is implemented when this method is used with switchover performed by an external DI terminal signal.

www.Farazcontrol.com واحد فروش: ۰۹۱۲۹۲۷۵۱۵۹ (مهندس رمضان زاده)

6.2.4 Command Source + Frequency Reference Setting Channel

It is possible to control final frequency reference through command source + frequency reference setting channel.

Figure 6-29 Command source + main frequency reference setting channel

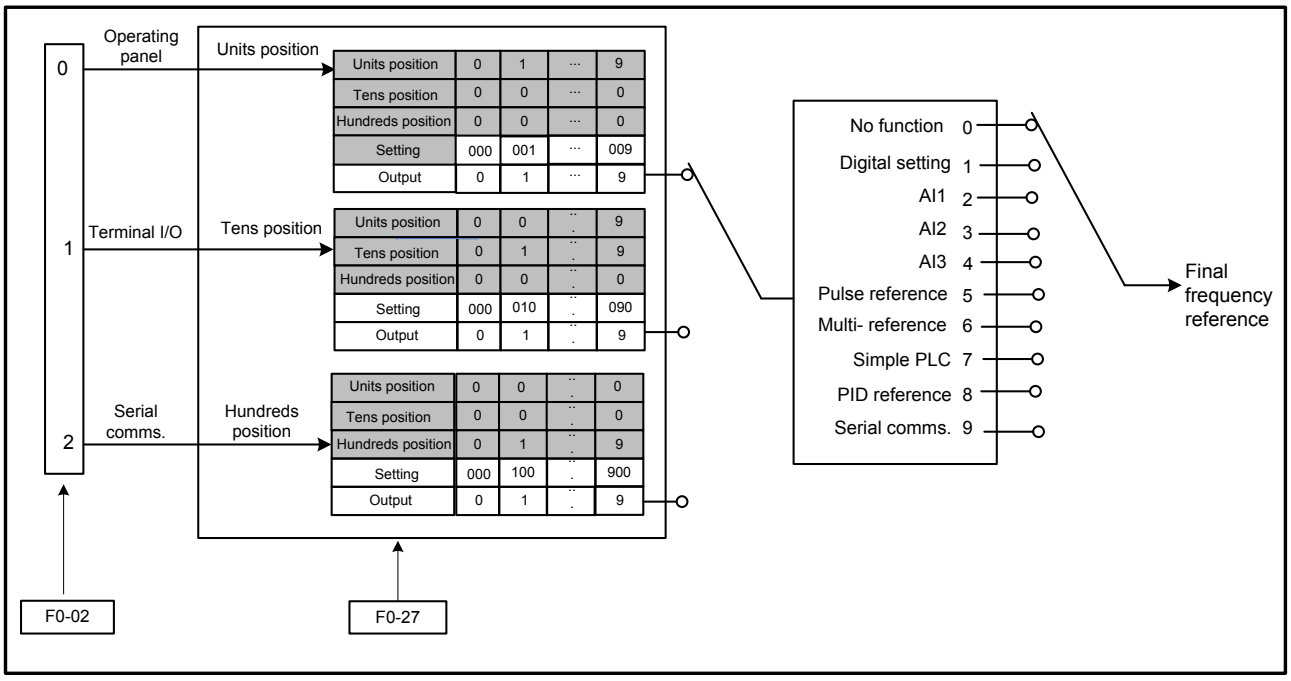

When a command source + frequency reference setting channel is used to control final frequency reference, both main and auxiliary frequency reference setting channels (F0-03 and F0-04) become ineffective.

Function Code	Parameter Name	Setting Range	Default
F0-27	Command source + frequency source	000 Serial comms. + frequency source The same as that of units position Terminal control + frequency source The same as that of units position Operating panel + frequency source 0: Not binding 1: Digital setting 2: AI1 3: AI2 4: AI3 5: Pulse reference (DI5) 6: Multi-reference 7: Simple PLC 8: PID reference 9: Serial comms.	000

www.Farazcontrol.com واحد فروش: ۰۹۱۲۹۲۷۵۱۵۹ (مهندس رمضان زاده)

6.2.5 Frequency Reference Limit

Function Code	Parameter Name	Setting Range	Default
F0-10	Max. frequency	50.00 to 500.00 Hz	50.00 Hz
F0-11	Setting channel of frequency reference upper limit	0: Set by F0-12 1: AI1 2: AI2 3: AI3 4: Pulse reference (DI5) 5: Communication reference	0
F0-12	Frequency reference upper limit	0.00 Hz to maximum frequency (F0-10)	0.00 Hz
F0-14	Frequency reference lower limit	0.00 Hz to frequency upper limit (F0-12)	0.00 Hz

- F0-12: The motor is not allowed to run at frequency reference above the setting in this function parameter.
- F0-14: The motor is not allowed to run at frequency reference below the setting in this function parameter.
- F0-10: It limits max. output frequency of the AC drive.
- F0-11: It selects setting channel of frequency reference upper limit.

6.2.6 Running Mode When Frequency Reference Below Lower Limit

Function Code	Parameter Name	Setting Range	Default
F8-14	Running mode when frequency reference lower than frequency lower limit	0: Run at frequency reference lower limit 1: Stop 2: Run at zero speed	0

F8-14: This function parameter sets the drive running mode when frequency reference is lower than frequency lower limit.

- F8-14 = 0: The motor runs at frequency reference lower limit.
- F8-14 = 1: The motor stops and the RUN indicator on the operation panel becomes off.
- F8-14 = 2: The motor runs at 0 Hz and the RUN indicator on the operation panel is on.

www.Farazcontrol.com واحد فروش: ۰۹۱۲۹۲۷۵۱۵۹ (مهندس رمضان زاده)

6.3 Start/Stop the AC Drive

This section describes how to start/stop the AC drive.

6.3.1 Start Mode

You can set start mode of the AC drive in F6-00, direct start, catching a spinning motor, pre-excited start and SVC quick start.

Related function parameters are listed as follows:

Function Code	Parameter Name	Setting Range	Default
F6-00	Start mode	0: Direct start 1: Catching a spinning motor 2: Pre-excited start	0
F6-01	Mode of catching a spinning motor	0: From stop frequency 1: From zero speed 2: From max. frequency 4: Catching a spinning motor in field-orientated control (requiring static auto-tuning, F1-37 = 1)	0
F6-02	Speed of catching a spinning motor	1 to 100	20
F6-03	Start frequency	0.00 to 10.00 Hz	0.00 Hz
F6-04	Start frequency holding time	0.0s to 100.0s	0.0s
F6-05	DC injection braking 1 level /Pre-excitation level	0% to 100%	50%
F6-06	DC injection braking 1 active time /Pre-excitation active time	0.0s to 100.0s	0.0s

www.Farazcontrol.com واحد فروش: ۰۹۱۲۹۲۷۵۱۵۹ (مهندس رمضان زاده)

■ F6-00 = 0: Direct Start

It is applicable to most small-inertia loads, as shown in Figure 6-30 (1).

Start frequency is applicable to drive equipment which requires startup torque, such as cement mixer, as shown in Figure 6-30 (2).

The DC injection braking function is applicable to drive load such as elevator and crane, as shown in Figure 6-30 (3).

Figure 6-30 (1) Sequence of direct start

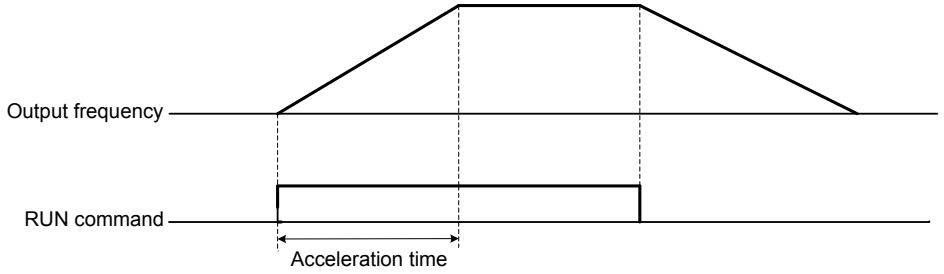

Figure 6-30 (2) Sequence of start with start frequency

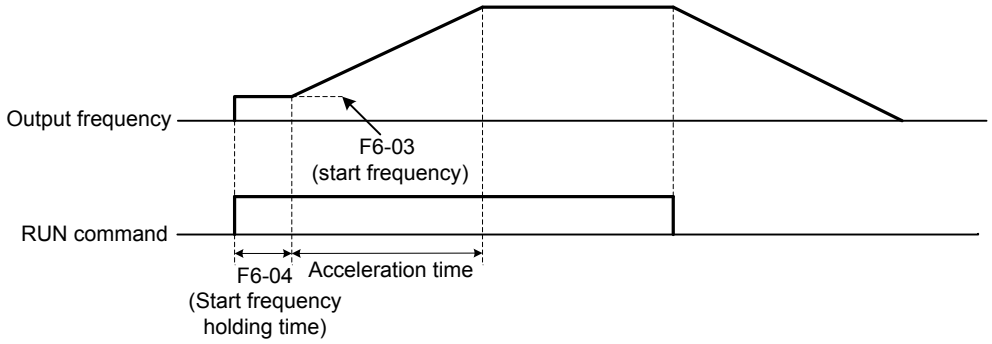

Figure 6-30 (3) Sequence of start with DC injection braking

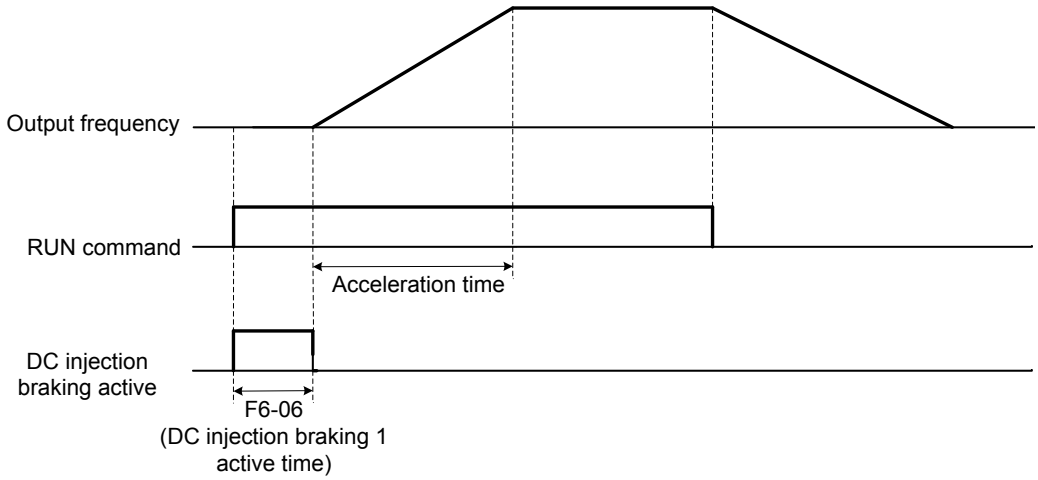

www.Farazcontrol.com واحد فروش: ۰۹۱۲۹۲۷۵۱۵۹ (مهندس رمضان زاده)

■ F6-00 = 1: Catching a Spinning Motor

To catch a spinning motor, the AC drive detects speed and direction of spinning motor, and then starts to run from the spinning motor frequency.

In this start mode, ensure that motor parameters in group F1 are set correctly.

Figure 6-31 Catching a spinning motor

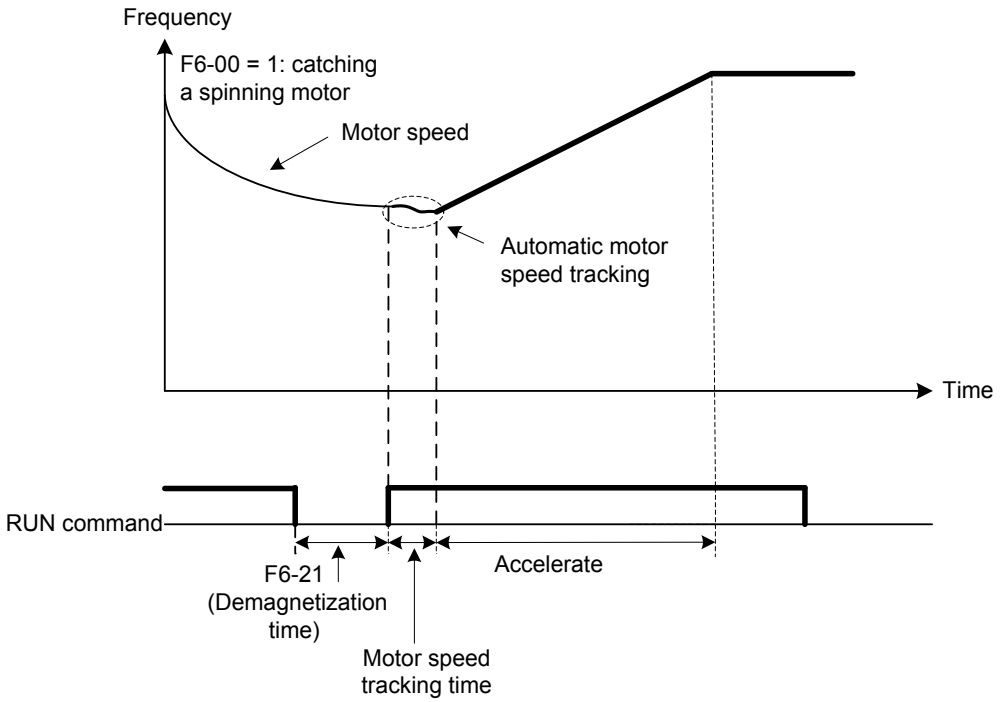

6

■ F6-00 = 2: Pre-excited Start

It is valid only for asynchronous motor and used for building magnetic field before motor running. For pre-excited current and pre-excited time, see *F6-05* and *F6-06*.

– If pre-excited time is 0, the AC drive cancels pre-excitation and starts to run from start frequency.
– If pre-excited time is not 0, the AC drive pre-excites first and then starts to run, improving motor dynamic response.

www.Farazcontrol.com واحد فروش: ۰۹۱۲۹۲۷۵۱۵۹ (مهندس رمضان زاده)

6.3.2 Stop Mode

You can set the stop mode of the AC drive in F6-10, decelerate to stop and coast to stop.

The related function parameters are listed as follows:

Function Code	Parameter Name	Setting Range	Default
F6-10	Stop mode	0: Decelerate to stop 1: Coast to stop	0
F6-11	DC injection braking 2 start frequency	0.00 Hz to maximum frequency	0.00 Hz
F6-12	DC injection braking 2 delay time	0.0 to 36.0s	0.0s
F6-13	DC injection braking 2 level	0% to 100%	50%
F6-14	DC injection braking 2 active time	0.0s to 36.0s	0.0s

F6-11: The AC drive starts DC injection braking when the running frequency decreases to the value set in this parameter in the process of deceleration to stop.

F6-12: When the running frequency decreases to the value set in F6-11, the AC drive stops output for a period of time and then starts DC injection braking. This prevents the occurrence of fault such as overcurrent caused by direct DC injection braking at high speed.

F6-13: It has the following two different base values.

- If the rated motor current is less than or equal to 80% of the rated AC drive current, the base value is the rated motor current.
- If the rated motor current is greater than 80% of the rated AC drive current, the base value is 80% of the rated AC drive current.

F6-14: If it is set to 0, DC injection braking is disabled.

Figure 6-32 Timing diagram of DC injection braking for stop

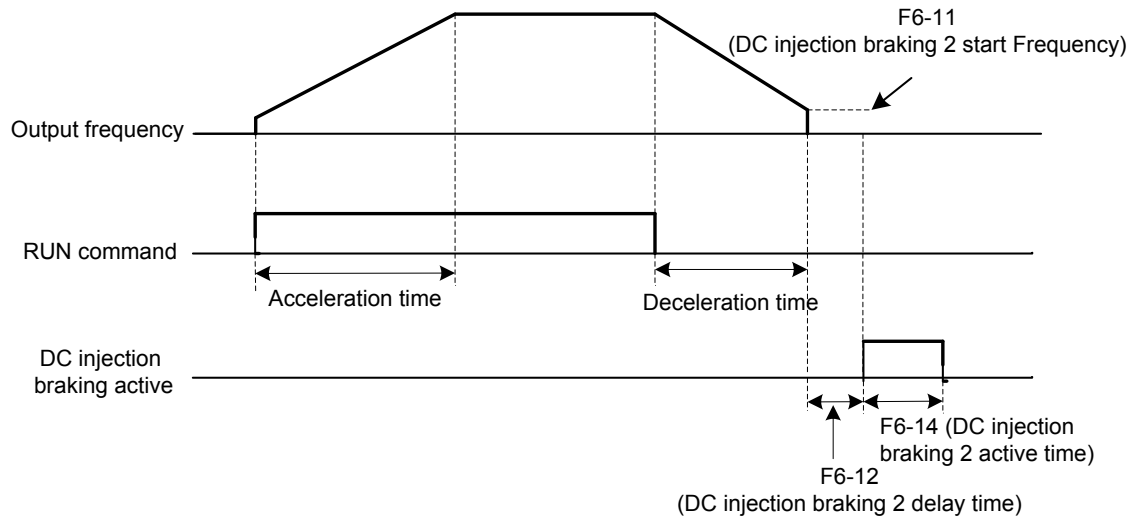

6

www.Farazcontrol.com واحد فروش: ۰۹۱۲۹۲۷۵۱۵۹ (مهندس رمضان زاده)

■ F6-10 = 0: Decelerate to Stop

Once the stop command is input, the AC drive decreases the output frequency based on the deceleration time to 0.

Figure 6-33 Decelerate to stop

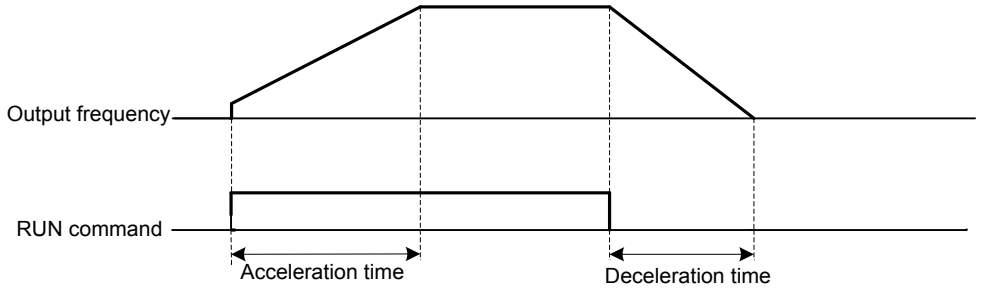

■ F6-10 = 1: Coast to Stop

Once the stop command is input, the AC drive immediately stops output. The motor then coasts to stop based on the mechanical inertia.

Figure 6-34 Coast to stop

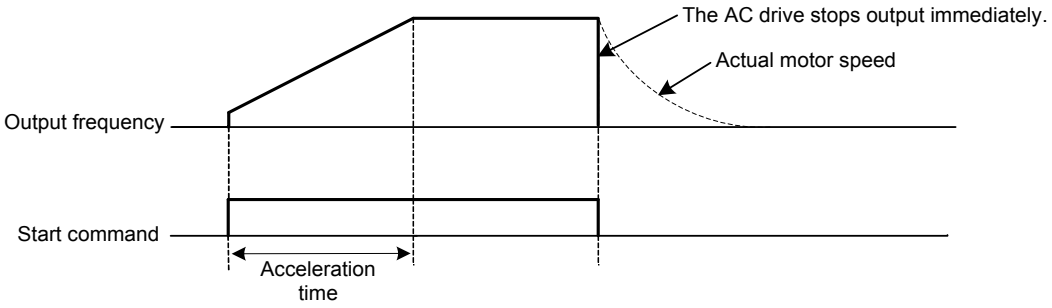

www.Farazcontrol.com واحد فروش: ۰۹۱۲۹۲۷۵۱۵۹ (مهندس رمضان زاده)

6.3.3 Acceleration/Deceleration Time and S-curve Setting

Acceleration time indicates time required by the AC drive to accelerate from 0 Hz to acceleration/deceleration time base frequency (F0-25).

Deceleration time indicates time required by the AC drive to decelerate from acceleration/deceleration time base frequency (F0-25) to 0 Hz.

Figure 6-35 Acceleration/Deceleration time

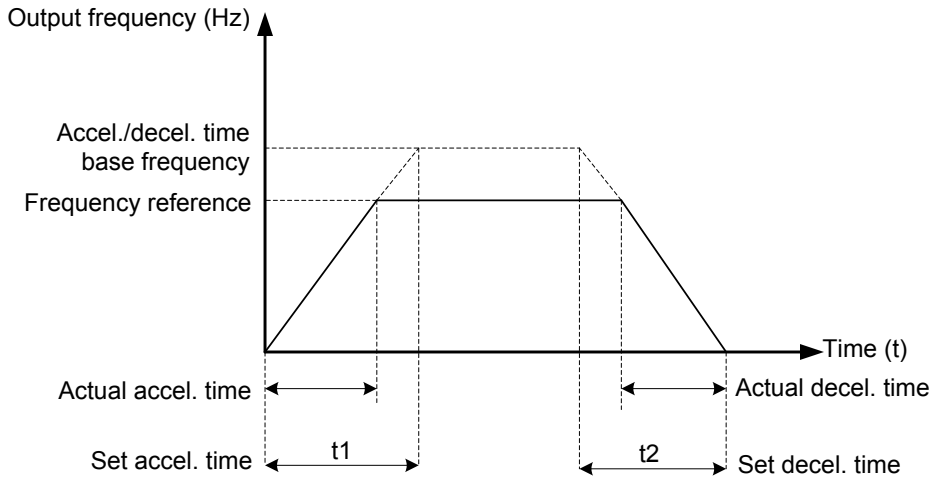

The AC drive provides totally four groups of acceleration/deceleration time for selection. You can perform switchover by using a DI terminal.

- Group 1: F0-17, F0-18
- Group 2: F8-03, F8-04
- Group 3: F8-05, F8-06
- Group 4: F8-07, F8-08

For example, select DI7 and DI8 for switchover.

Related function parameters are set as follows:

Function Code	Parameter Name	Setting	Function Description
F4-06	DI7 function selection	16	Terminal 1 for acceleration/deceleration time selection
F4-07	DI8 function selection	17	Terminal 2 for acceleration/deceleration time selection

Two terminals for acceleration/deceleration time selection have four state combinations, as listed in the following table.

Terminal 2	Terminal 1	Accel/Decel Time Selection	Corresponding Pr.
OFF	OFF	Accel/Decel time 1	F0-17, F0-18
OFF	ON	Accel/Decel time 2	F8-03, F8-04
ON	OFF	Accel/Decel time 3	F8-05, F8-06
ON	ON	Accel/Decel time 4	F8-07, F8-08

www.Farazcontrol.com واحد فروش: ۰۹۱۲۹۲۷۵۱۵۹ (مهندس رمضان زاده)

The function parameters related acceleration/deceleration time are as follows:

Function Code	Parameter Name	Setting Range	Default
F0-17	Acceleration time 1	0.00 to 650.00s (F0-19 = 2) 0.0 to 6500.0s (F0-19 = 1) 0 to 65000s (F0-19 = 0)	Model dependent
F0-18	Deceleration time 1	0.00 to 650.00s (F0-19 = 2) 0.0 to 6500.0s (F0-19 = 1) 0 to 65000s (F0-19 = 0)	Model dependent
F8-03	Acceleration time 2	0.0s to 6500.0s	Model dependent
F8-04	Deceleration time 2	0.0s to 6500.0s	Model dependent
F8-05	Acceleration time 3	0.0s to 6500.0s	Model dependent
F8-06	Deceleration time 3	0.0s to 6500.0s	Model dependent
F8-07	Acceleration time 4	0.0s to 6500.0s	Model dependent
F8-08	Deceleration time 4	0.0s to 6500.0s	Model dependent
F0-19	Acceleration/ Deceleration time unit	0:1s 1: 0.1s 2: 0.01s	1
F0-25	Acceleration/ Deceleration time base frequency	0: Maximum frequency (F0-10) 1: Frequency reference 2: 100 Hz	0
F6-07	Acceleration/ Deceleration mode	0: Linear acceleration/deceleration 1: Static S-curve acceleration/ deceleration 2: Dynamic S-curve acceleration/ deceleration	0
F6-08	Time proportion of S-curve start segment	0.0% to (100.0% – F6-09)	30.0%
F6-09	Time proportion of S-curve end segment	0.0% to (100.0% – F6-08)	30.0%

F6-07 sets acceleration/deceleration mode.

- F6-07 = 0: Linear acceleration/deceleration

  Output frequency increases or decreases linearly. The drive provides four groups of acceleration/deceleration time, selected via F4-00 to F4-08.

- F6-07 = 1: Static S-curve acceleration/deceleration

  Output frequency increases or decreases along S curve on the condition that target frequency is fixed. This mode is applied to applications where soft start or stop is required, such as elevator and conveyor belt.

- F6-07 = 2: Dynamic S-curve acceleration/deceleration

  Output frequency increases or decreases along S curve on the condition that target frequency is changing at real time. This mode is applicable to applications requiring supreme riding comfort and fast response.

F6-08 and F6-09 define time proportion of start segment and end segment of S-curve acceleration/deceleration, respectively. They must satisfy F6-08 + F6-09 ≤ 100.0%.

www.Farazcontrol.com واحد فروش: ۰۹۱۲۹۲۷۵۱۵۹ (مهندس رمضان زاده)

6.4 Motor Auto-tuning

You can obtain parameters of controlled motor through motor auto-tuning.

Motor auto-tuning methods are static auto-tuning 1, static auto-tuning 2 and dynamic auto-tuning. You can select a proper auto-tuning method in F1-37.

Function Code	Parameter Name	Setting Range	Default
F1-37	Motor auto-tuning method selection	0: No auto-tuning 1: Static auto-tuning 1 2: Dynamic auto-tuning 3: Static auto-tuning 2	0

- F1-37 = 0: Motor auto-tuning is not performed.
- F1-37 = 1: Only stator resistance, rotor resistance and leakage inductance are obtained through static auto-tuning 1.
- F1-37 = 2: All motor parameters are obtained through dynamic auto-tuning.
- F1-37 = 3: All motor parameters are obtained through static auto-tuning 2.

The three motor auto-tuning methods are compared as follows:

Auto-tuning Method	Application	Result
Static auto-tuning 1	It is applied to applications where motor cannot be disconnected from load and dynamic auto-tuning is not allowed.	OK
Dynamic auto-tuning	It is applied to applications where motor can be disconnected from load.	Best
Static auto-tuning 2	It is applied to applications where the motor cannot be disconnected from the load and dynamic auto-tuning is not allowed.	Better

Motor 1 is used to describe motor auto-tuning methods below. If you need to perform motor 2 auto-tuning, set F0-24 = 1 and refer to *6.8.4 Motor 2 Parameters*.

■ F1-37 = 1: Static Auto-tuning 1

If V/F is adopted and motor cable exceeds 50 m, keep motor connected to load and use static auto-tuning 1.

The static auto-tuning 1 process is as follows:

Steps	Description
Step 1	Power on the AC drive. Set F0-02 = 0 to select the operation panel as command source.
Step 2	Input motor nameplate parameters (F1-00 to F1-05) correctly.
Step 3	Set F1-37 = 1 to select static auto-tuning 1. Press ENTER on the operation panel. The operation panel displays 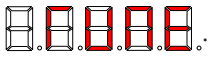
Step 4	Press RUN on the operation panel. Motor does not rotate but gets energized. The RUN indicator becomes ON. After the preceding display disappears and the operation panel returns to normal parameter display state, it indicates that auto-tuning is completed. Parameters F1-06 to F1-08 are obtained.

www.Farazcontrol.com واحد فروش: ۰۹۱۲۹۲۷۵۱۵۹ (مهندس رمضان زاده)

■ F1-37 = 2: Dynamic Auto-tuning

If motor has constant output characteristic and is used for high-accuracy application, disconnect motor from load and use dynamic auto-tuning.

The dynamic auto-tuning process is as follows:

Steps	Description
Step 1	Power on the AC drive. Set F0-02 = 0 to select the operation panel as command source.
Step 2	Input motor nameplate parameters (F1-00 to F1-05) correctly.
Step 3	Set F1-37 = 2 to select dynamic auto-tuning. Press ENTER on the operation panel. The operation panel displays 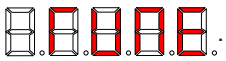 .
Step 4	Press RUN on the operation panel. The AC drive drives motor to accelerate/decelerate and run in forward/reverse direction. The RUN indicates becomes ON and auto-tuning lasts for a period. After the preceding display disappears and the operation panel returns to normal parameter display state, it indicates that auto-tuning is completed. Parameters F1-06 to F1-10 are obtained.

■ F1-37 = 3: Static Auto-tuning 2

If motor cannot be disconnected from load, use static auto-tuning 2. The static auto-tuning 2 process is as follows:

Steps	Description
Step 1	Power on the AC drive. Set F0-02 = 0 to select operating panel as command source.
Step 2	Input motor nameplate parameters (F1-00 to F1-05) correctly.
Step 3	Set F1-37 = 3 to select the static auto-tuning 2. Press ENTER on the operation panel. The operation panel displays 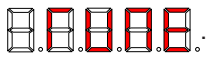 .
Step 4	Press RUN on the operation panel. Motor does not rotate but gets energized. The RUN indicates becomes ON. After the preceding display disappears and the operation panel returns to normal parameter display state, it indicates that auto-tuning is completed. Parameters F1-06 to F1-10 are obtained.

Note	
	• If it is not possible to perform motor auto-tuning on site, input motor parameters of the same motor model into parameters F1-00 to F1-10. • You can also perform motor auto-tuning via terminal I/O control or serial comms. (F0-02 = 1 or 2).

www.Farazcontrol.com واحد فروش: ۰۹۱۲۹۲۷۵۱۵۹ (مهندس رمضان زاده)

Related parameters are described as follows:

Function Code	Parameter Name	Setting Range	Default
F1-00	Motor type selection	0: Common asynchronous motor 1: Variable frequency asynchronous motor	1
F1-01	Rated motor power	0.1 to 1000.0 kW	Model dependent
F1-02	Rated motor voltage	1 to 2000 V	Model dependent
F1-03	Rated motor current	0.01 to 655.35 A (AC drive power ≤ 55 kW) 0.1 to 6553.5 A (AC drive power > 55 kW)	Model dependent
F1-04	Rated motor frequency	0.01 Hz to max. frequency	Model dependent
F1-05	Rated motor speed	1 to 65535 RPM	Model dependent

F1-00 to F1-05 are motor nameplate parameters. Set them correctly according to motor nameplate to ensure accurate motor auto-tuning result.

Function Code	Parameter Name	Setting Range	Default
F1-06	Stator resistance	0.001 to 65.535 Ω (AC drive power ≤ 55 kW) 0.0001 to 6.5535 Ω (AC drive power > 55 kW)	Model dependent
F1-07	Rotor resistance	0.001 to 65.535 Ω (AC drive power ≤ 55 kW) 0.0001 to 6.5535 Ω (AC drive power > 55 kW)	Model dependent
F1-08	Leakage inductive reactance	0.01 to 655.35 mH (AC drive power ≤ 55 kW) 0.001 to 65.535 mH (AC drive power > 55 kW)	Model dependent
F1-09	Mutual inductive reactance	0.1 to 6553.5 mH (AC drive power ≤ 55 kW) 0.01 to 655.35 mH (AC drive power > 55 kW)	Model dependent
F1-10	No-load current	0.01 to F1-03 (AC drive power ≤ 55 kW) 0.1 to F1-03 (AC drive power > 55 kW)	Model dependent

F1-06 to F1-10: These function parameters are asynchronous motor parameters and can be obtained through motor auto-tuning. Only F1-06 to F1-08 can be obtained through static auto-tuning. F1-06 to F1-10 can be obtained through dynamic auto-tuning.

If motor auto-tuning cannot be performed on site, set these parameters according to data provided by motor manufacturer.

www.Farazcontrol.com واحد فروش: ۰۹۱۲۹۲۷۵۱۵۹ (مهندس رمضان زاده)

6.5 Control Performance

6.5.1 V/F Curve

■ Linear, Multi-point and Square V/F Curve

Function Code	Parameter Name	Setting Range	Default
F3-00	V/F curve setting	0: Linear V/F 1: Multi-point V/F 2: Square V/F 10: V/F separation 11: Specific V/F separation	0
F3-01	Torque boost	0.0%: fixed boost 0.1% to 30%	Model dependent
F3-02	Cut-off frequency of torque boost	0.00 Hz to max. frequency	50.00 Hz
F3-03	Multi-point V/F frequency 1	0.00 Hz to F3-05	0.00 Hz
F3-04	Multi-point V/F voltage 1	0.0% to 100.0%	0.0%
F3-05	Multi-point V/F frequency 2	F3-03 to F3-07	0.00 Hz
F3-06	Multi-point V/F voltage 2	0.0% to 100.0%	0.0%
F3-07	Multi-point V/F frequency 3	F3-05 to rated motor frequency (F1-04)	0.00 Hz
F3-08	Multi-point V/F voltage 3	0.0% to 100.0%	0.0%

1. General constant-torque linear V/F curve

Figure 6-36 General constant-torque linear V/F curve

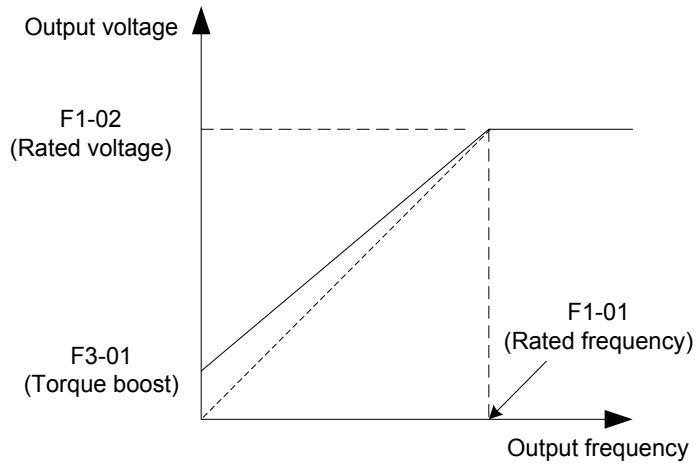

Output voltage and output frequency change linearly when below rated frequency. It is applicable to general mechanical drive applications such as conveyors where the load torque is constant against the speed range.

www.Farazcontrol.com (مهندس رمضان زاده) ۰۹۱۲۹۲۷۵۱۵۹ واحد فروش:

2. User-defined Multi-point V/F curve

Figure 6-37 User-defined Multi-point V/F curve

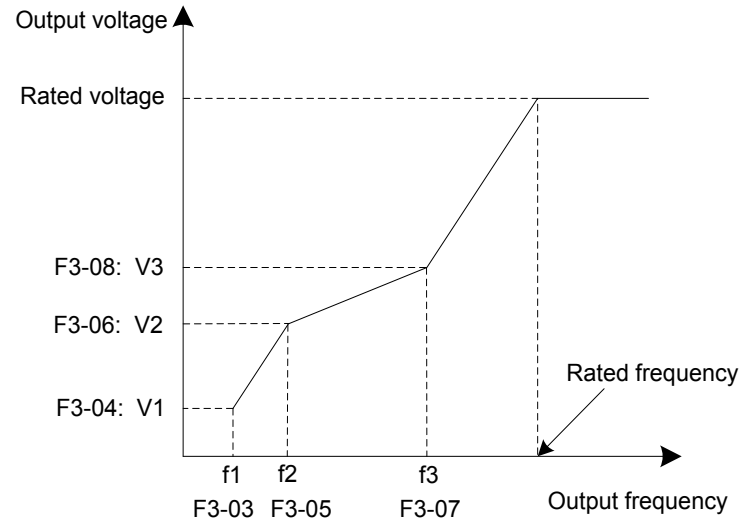

F3-03 to F3-08 define multi-point V/F curve.

You must set multi-point V/F curve based on motor's load characteristic. The three voltage points and frequency points must satisfy: V1 < V2 < V3, f1 < f2 < f3. When you set F1 (F3-03), F2 (F3-05) and F3 (F3-07), set F3-07 first, then F3-05 and finally F3-03.

3. Variable-torque Square V/F curve

Figure 6-38 Variable-torque Square V/F curve

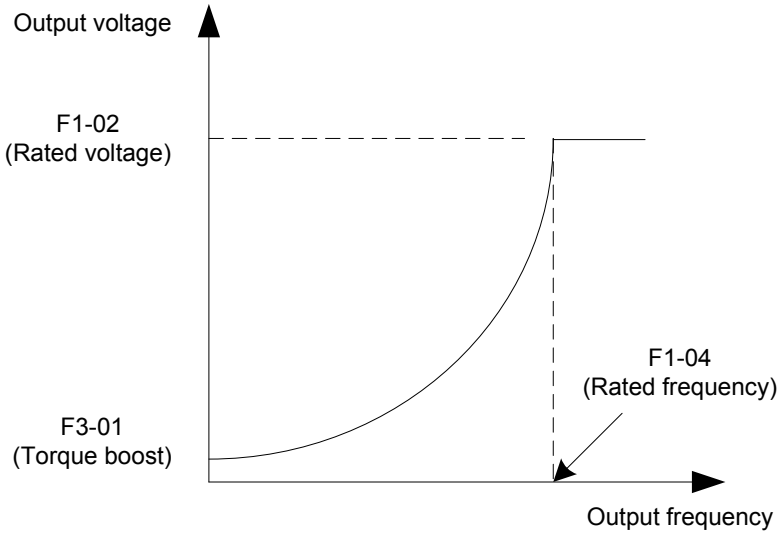

Output voltage and output frequency change according to square curve when below rated frequency. It is applicable to applications such as centrifugal fans where the load is inversely proportional to the speed.

www.Farazcontrol.com واحد فروش: ۰۹۱۲۹۲۷۵۱۵۹ (مهندس رمضان زاده)

■ V/F Separation Curve

Function Code	Parameter Name	Setting Range	Default
F3-13	Voltage source for V/F separation	0: Set by F3-14 1: AI1 2: AI2 3: AI3 4: Pulse reference (DI5) 5: Multi-reference 6: Simple PLC 7: PID reference 8: Serial comms. 100.0% corresponds to the rated motor voltage (F1-02, A2-02).	0
F3-14	Digital setting of voltage for V/F separation	0 V to rated motor voltage	0 V
F3-15	Voltage rise time of V/F separation	0.0s to 1000.0s	0.0s
F3-16	Voltage decline time of V/F separation	0.0s to 1000.0s	0.0s
F3-17	Stop mode selection for V/F separation	0: Frequency and voltage declining to 0 independently 1: Frequency declining after voltage declines to 0	0

6

Voltage rise time of V/F separation indicates time required by voltage to rise from 0 to rated motor voltage.

Voltage decline time of V/F separation indicates time required by voltage to decline from rated motor voltage to 0.

Figure 6-39 V/F separation

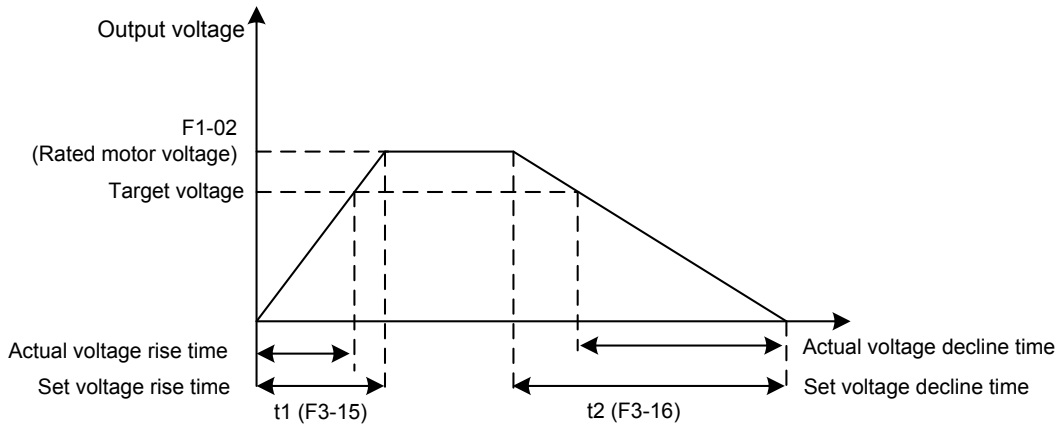

www.Farazcontrol.com واحد فروش: ۰۹۱۲۹۲۷۵۱۵۹ (مهندس رمضان زاده)

6.5.2 Torque Boost

The torque compensation function compensates for insufficient torque production at low frequency.

Function Code	Parameter Name	Setting Range	Default
F3-01	Torque boost	0.0%: fixed torque boost 0.1% to 30%	Model dependent
F3-02	Cut-off frequency of torque boost	0.00 Hz to max. frequency	50.00 Hz

F3-01 compensates for insufficient torque production by boosting output voltage of the AC drive. But very large setting will result in motor overheat and AC drive overcurrent.

- On starting a heavy load and insufficient torque is experienced, increase the torque boost in F3-01.
- Decrease this parameter on light loads to avoid overheating the motor.

F3-02 sets the cutoff frequency. The torque boost function is disengaged when the output frequency exceeds the cutoff point.

6.5.3 Current Limit Control

When output current exceeds the value set in F3-18 during acceleration, constant running or deceleration, current limit is enabled and output frequency starts to drop. Until output current recovers below the current limit level, output frequency starts to rise to target frequency again.

Figure 6-40 Current limit

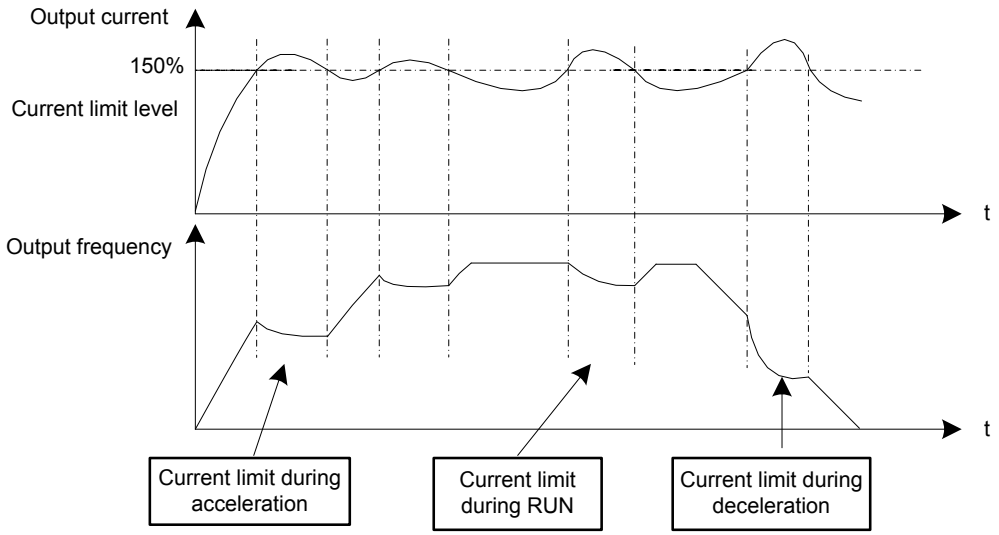

www.Farazcontrol.com واحد فروش: ۰۹۱۲۹۲۷۵۱۵۹ (مهندس رمضان زاده)

Function Code	Parameter Name	Setting Range	Default
F3-18	Current limit level	50% to 200%	150%
F3-19	Current limit selection	0: Disabled 1: Enabled	1
F3-20	Current limit gain	0 to 100	20
F3-21	Compensation factor of speed multiplying current limit	50% to 200%	0

In high frequency area, motor drive current is small. Bigger motor speed dip is caused by current limit level compared with below rated frequency. To improve motor running characteristic, you can lower current limit level above rated frequency.

The current limit function above rated frequency helps to improve acceleration performance in the applications, such as centrifuge, where high running frequency and several times of field weakening are required, and load inertia is large.

The current limit level above rated frequency = (fs/fn) x k x LimitCur.

- fs: running frequency
- fn: rated motor frequency
- k: compensation factor of speed multiplying current limit level (F3-21)
- LimitCur: current limit level (F3-18)

Figure 6-41 Current limit above rated frequency

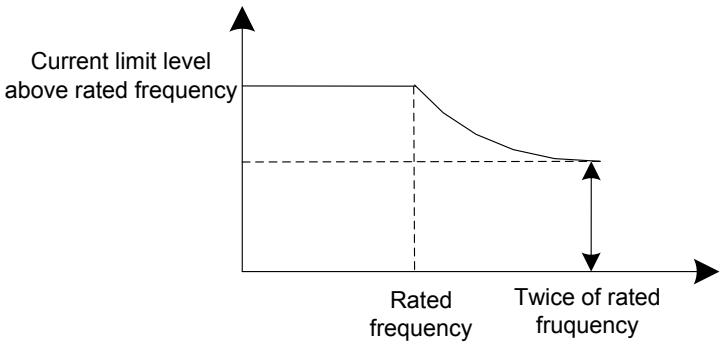

Note	
	• Current limit level 150% indicates 1.5 times of rated current of the AC drive. • For high-power motor with carrier frequency below 2 kHz, lower the current limit level. This is because the overcurrent fast prevention function is enabled in advance of the current limit function due to increase of pulsating current, which will result in insufficient torque output.

www.Farazcontrol.com واحد فروش: ۰۹۱۲۹۲۷۵۱۵۹ (مهندس رمضان زاده)

6.5.4 Voltage Limit and Braking Unit Applied Voltage

When bus voltage rises above the value set in F3-22, the motor becomes regenerative. This function prevents overvoltage trips by adjusting the output frequency to extend deceleration time in this case.

If actual deceleration time cannot satisfy the requirement, increase the value of F3-10 (V/F over-excitation gain) adequately.

Figure 6-42 Voltage limit

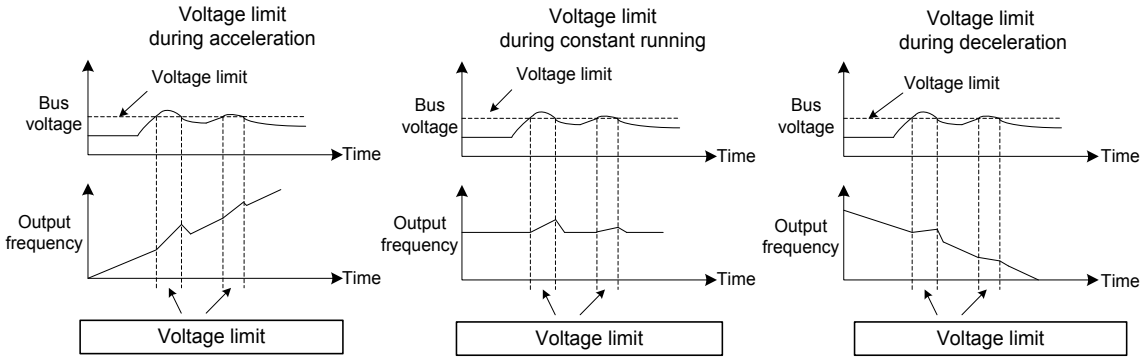

Function Code	Parameter Name	Setting Range	Default
F3-22	Voltage limit	650 to 800 V	760 V
F3-23	Voltage limit selection	0: Disabled 1: Enabled	1
F3-24	Frequency gain for voltage limit	0 to 100	30
F3-25	Voltage gain for voltage limit	0 to 100	30
F3-26	Frequency rise threshold during voltage limit	0 to 50 Hz	5 Hz
F9-08	Braking unit applied voltage	650 to 800 V	760 V
F3-10	V/F over-excitation gain	0 to 200	64
F3-11	V/F oscillation suppression gain	0 to 100	40

Note	When using braking resistor, braking unit or energy feedback unit, pay attention to the following aspects: • Set F3-10 (V/F over-excitation gain) to 0. Otherwise, too large current may occur during drive running. • Set F3-23 (overvoltage suppression selection) to 0 (disabled). Otherwise, the deceleration time may become longer.

www.Farazcontrol.com واحد فروش: ۰۹۱۲۹۲۷۵۱۵۹ (مهندس رمضان زاده)

6.5.5 Improving Field Weakening Area Performance

Function Code	Parameter Name	Setting Range	Default
A5-05	Max. output voltage coefficient	100% to 110%	105%

This parameter indicates boost capacity of maximum voltage of the AC drive. Increasing A5-05 will improve max. loading capacity in motor field weakening area. Be aware that this may lead to an increase in motor current ripple and an increase in motor heating.

Decreasing it will reduce motor current ripple and motor heating. Be aware that this will lower max. loading capacity in motor field weakening area. Adjustment of this parameter is not required normally.

6.5.6 Auxiliary Control

Function Code	Parameter Name	Setting Range	Default
A5-00	DPWM switchover frequency upper limit	0.00 to 15.00 Hz	12.00 Hz

Increasing this parameter to the max. frequency will reduce motor audible noise.

Function Code	Parameter Name	Setting Range	Default
A5-01	PWM modulation pattern	0: Asynchronous modulation 1: Synchronous modulation	0

When the output current oscillates or large current harmonics occur, set A5-01 = 1.

Function Code	Parameter Name	Setting Range	Default
A5-03	Random PWM depth	0: Random PWM invalid 1 to 10	0

This parameter helps to lower motor audible noise and reduce electromagnetic interference.

www.Farazcontrol.com واحد فروش: ۰۹۱۲۹۲۷۵۱۵۹ (مهندس رمضان زاده)

6.6 Protections

This section introduces functions on protecting the AC drive and motor.

6.6.1 Motor Overload Protection

Function Code	Parameter Name	Setting Range	Default
F9-00	Motor overload protection	0: Disabled 1: Enabled	1
F9-01	Motor overload protection gain	0.20 to 10.00	1.00

- F9-00 = 0: The motor overload protection is disabled. In this case, install a thermal relay between the AC drive output (U, V, W) and the motor.
- F9-00 = 1: The motor overload protection function has an inverse load-time characteristics.

If the motor overload current level and overload protection time need be adjusted, modify setting of F9-01.

The inverse load-time characteristic is shown in the following figure.

Figure 6-43 Inverse time-lag curve

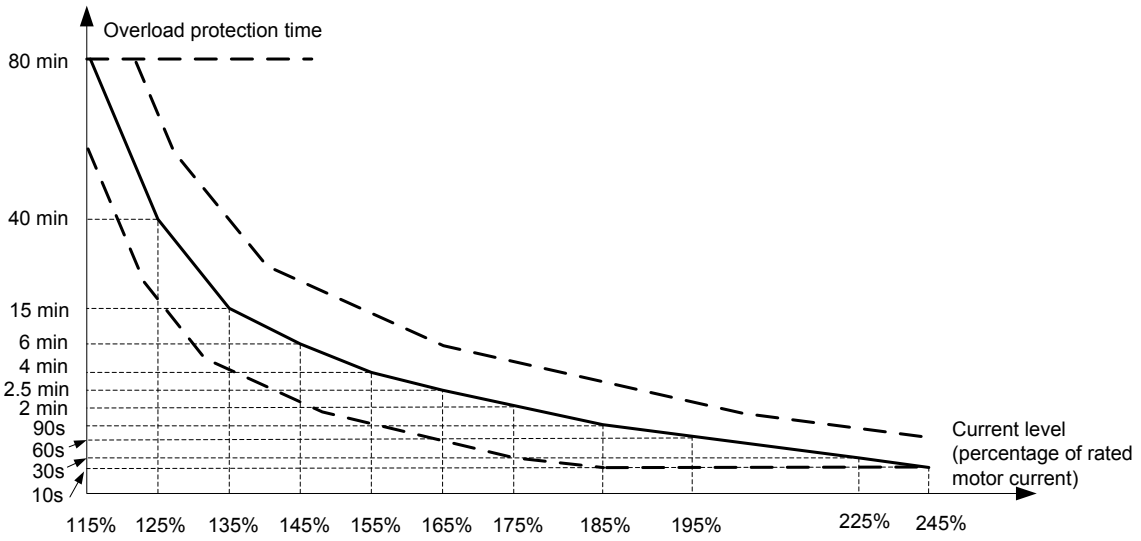

When motor running current reaches 175% of rated motor current and motor runs at this level for 2 minutes, Err11 (motor overload) is detected. When motor running current reaches 115% of rated motor current and motor runs at this level for 80 minutes, Err11 is detected.

Suppose that rated motor current is 100 A.

- F9-01 = 1.00: According to Figure 7-47, when motor running current reaches 125 A (125% of 100 A) and motor runs at 125 A for 40 minutes, Err11 is detected.
- F9-01 = 1.20: According to Figure 7-47, when motor running current reaches 125 A (125% of 100 A) and motor runs at 125 A for 40 x 1.2 = 48 minutes, Err11 is detected.

Note	It is important to study and understand the thermal performance and capacity of the motor in use. Motor data is available from the motor manufacturer. It necessary to set the motor overload function/parameters correctly in order to protect the motor from a sustained overload. The AC drive default settings do not automatically match and protect the motor.

www.Farazcontrol.com واحد فروش: ۰۹۱۲۹۲۷۵۱۵۹ (مهندس رمضان زاده)

For example, application requires detect of Err11 when motor runs at 150% of rated motor current for two minutes.

According to Figure 7-47, 150% (I) is in the range of 145% (I1) and 155% (I2). 145% corresponds to overload protection time 6 minutes (T1) and 145% corresponds to overload protection time 4 minutes (T2). You can calculate overload protection time T corresponding to 150% from the following formula:

T = T1 + (T2 - T1) x (I - I1) / (I2-I1) = 4 + (6 - 4) x (150% - 145%) / (155%-145%) = 5 minutes

Then calculate motor overload protection gain from the following formula: F9-01 = Desired overload protection time / Corresponding overload protection time = 2 / 5 = 0.4.

Note	The motor should be fitted with overtemperature sensors (e.g PTC) and wired to a protection relay. Such protection devices measure actual motor winding temperature and is the ultimate protection.

Function Code	Parameter Name	Setting Range	Default
F9-02	Motor overload pre-warning coefficient	50% to 100%	80%

The AC drive has the motor overload pending function that reminds of motor overload in advance through digital output function 6.

On the condition that F9-01 = 1.00 and F9-02 = 80%, when motor running current reaches 145% of rated motor current and motor runs at this level for 80% x 6 = 4.8 minutes, DO terminal or fault relay outputs the motor overload pending signal.

When F9-02 = 100%, the motor overload pending and the motor overload protection are performed simultaneously.

6.6.2 Phase Loss Protection

Function Code	Parameter Name	Setting Range	Default
F9-12	Input phase loss/pre-charge relay protection	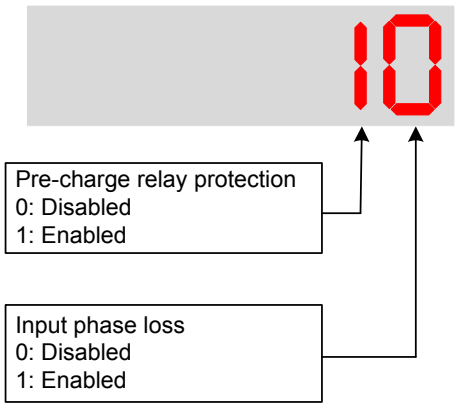	11

This function parameter determines whether to perform input phase loss or pre-charge relay protection. The input phase loss detection function is disabled when the AC drive is in stop status or when output power is below 20% of rated AC drive power.

www.Farazcontrol.com واحد فروش: ۰۹۱۲۹۲۷۵۱۵۹ (مهندس رمضان زاده)

Function Code	Parameter Name	Setting Range	Default
F9-13	Output phase loss protection	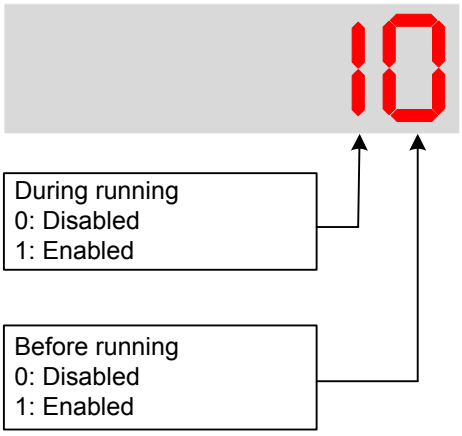	01

Units position: It determines whether to perform output phase loss protection. If protection is disabled but power output phase loss occurs, the AC drive does not detect the fault. At this moment, actual current is larger than the current displayed on the operating panel.

Tens position: It takes about several seconds to detect output phase loss during running. In low-frequency running application or application where risks exist in start with phase loss, set this position to 1. In applications which have strict requirements on start time, set this position to 0.

6.6.3 Fault Reset

Function Code	Parameter Name	Setting Range	Default
F9-09	Auto reset times	0 to 20	0

This function parameter sets permissible times of auto fault reset. If reset times exceed the value set in this parameter, the AC drive will keep fault status.

6

Note	• Undervoltage (Err09) is reset automatically when bus voltage recovers to normal. It is not included in auto reset times. • Short-circuit to ground (Err23) cannot be reset automatically or manually. It can only be reset after power down.

Function Code	Parameter Name	Setting Range	Default
F9-10	Selection of DO action during auto reset	0: Not act 1: Act	0

This function parameter decides whether digital output terminal set for fault output acts during the fault reset.

Function Code	Parameter Name	Setting Range	Default
F9-11	Delay of auto reset	0.1s to 100.0s	1.0s

This function parameter sets the delay of auto reset after the AC drive detects a fault.

www.Farazcontrol.com واحد فروش: ۰۹۱۲۹۲۷۵۱۵۹ (مهندس رمضان زاده)

6.6.4 Fault Protection Action Selection

Function Code	Parameter Name	Setting Range	Default
F9-47	Fault protection action selection 1	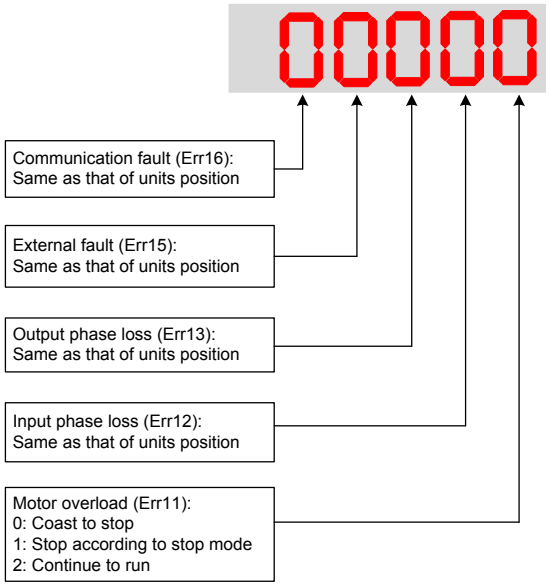	00000
F9-48	Fault protection action selection 2	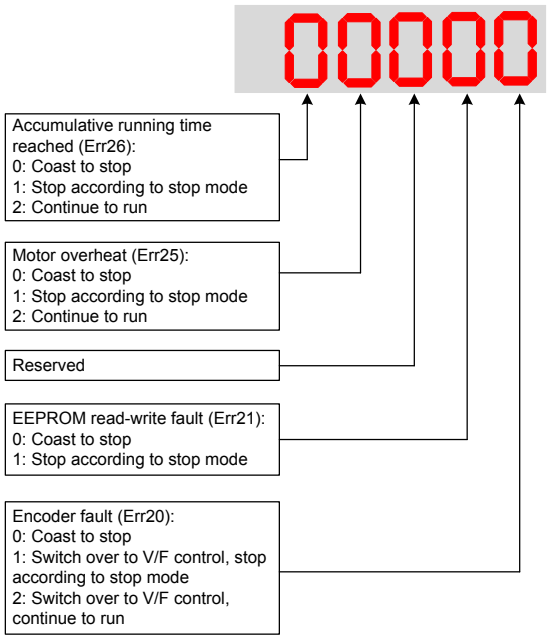	00000

Function Code	Parameter Name	Setting Range	Default
F9-54	Frequency selection for continuing to run upon fault	0: Current running frequency 1: Frequency reference 2: Frequency upper limit 3: Frequency lower limit 4: Backup frequency upon abnormality	0
F9-55	Backup frequency upon fault	0.0% to 100.0% (max. frequency)	100.0%

These function parameters define running frequency of the AC drive when “Continue to run” is selected at occurrence of fault.

www.Farazcontrol.com واحد فروش: ۰۹۱۲۹۲۷۵۱۵۹ (مهندس رمضان زاده)

6.6.5 Motor Overheat Protection

Function Code	Parameter Name	Setting Range	Default
F9-56	Type of motor temperature sensor	0: No temperature sensor 1: PT100 2: PT1000	0
F9-57	Motor overheat protection threshold	0°C to 200°C	110°C
F9-58	Motor overheat pre-warning threshold	0°C to 200°C	90°C

A motor temperature sensor can be connected to AI3 and PGND on extension I/O card. This input is used by the drive for motor overheat protection.

When input signal reaches the value set in F9-57, the AC drive detects Err25 and acts as selected in thousands position in F9-48. When input signal reaches the value set in F9-58, digital output terminal set for function 39 becomes on.

The drive supports both PT100 and PT1000. Make sure to set sensor type correctly. You can view motor temperature in U0-34.

6.6.6 Power Dip Ride-through

The power dip ride-through function ensures the system to run continuously at occurrence of momentary power loss.

When an instantaneous power loss occurs, the AC drive compensates DC bus voltage reduction with real-time energy feedback by reducing output frequency, preventing the AC drive from stopping due to undervoltage.

- F9-59 = 1: It is applicable to large-inertia applications such as fan, water pump and centrifuge
- F9-59 = 2: It is applicable to the textile industry.

Figure 6-44 Power dip ride-through

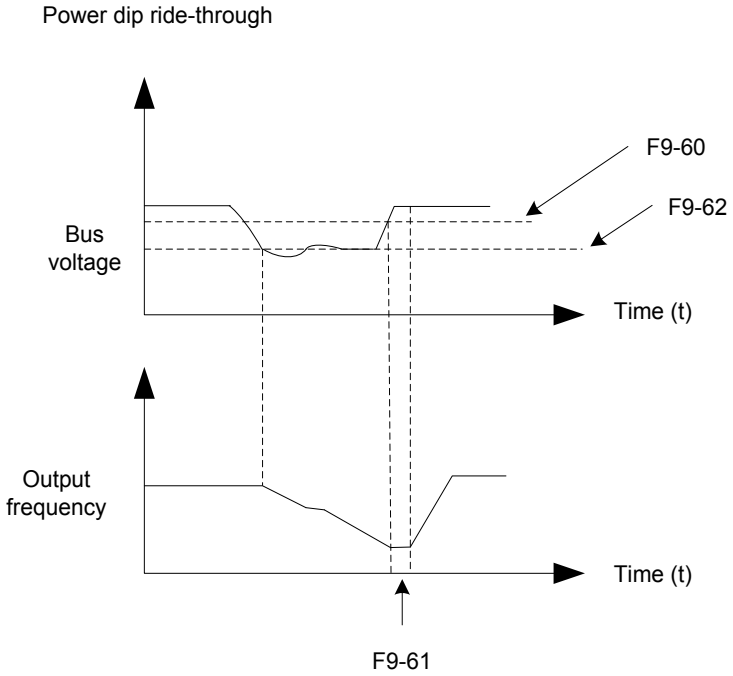

www.Farazcontrol.com واحد فروش: ۰۹۱۲۹۲۷۵۱۵۹ (مهندس رمضان زاده)

Function Code	Parameter Name	Setting Range	Default
F9-59	Power dip ride-through function selection	0: Disabled 1: Bus voltage constant control 2: Decelerate to stop	0
F9-60	Threshold of power dip ride-through function disabled	85% to 120%	85%
F9-61	Judging time of bus voltage recovering from power dip	0.1s to 10.0s	0.5s
F9-62	Threshold of power dip ride-through function enabled	60% to 85% (standard bus voltage)	80.0%
F9-71	Power dip ride-through gain Kp	0 to 100	40
F9-72	Power dip ride-through integral coefficient	0 to 100	30
F9-73	Deceleration time of power dip ride-through	0.0s to 300.0s	20.0s

Note	• In bus voltage constant control, when line voltage recovers, the AC drive accelerates to target frequency. • In deceleration to stop mode, when line voltage recovers, the AC drive continues to decelerate to 0 Hz and stops. The AC drive will not be started until it receives RUN command again.

6.6.7 Load Lost Protection

Function Code	Parameter Name	Setting Range	Default
F9-63	Load lost protection	0: Disabled 1: Enabled	0
F9-64	Load lost detection level	0.0% to 100.0% (rated motor current)	10.0%
F9-65	Load lost detection time	0.0s to 60.0s	1.0s

These function parameters define the load lost protection function.

When output current of the AC drive falls below detection level (F9-64) for longer than time set in F9-65, the AC drive automatically reduces output frequency to 7% of rated frequency. Once load recovers during protection, the AC drive accelerates to frequency reference.

www.Farazcontrol.com واحد فروش: ۰۹۱۲۹۲۷۵۱۵۹ (مهندس رمضان زاده)

6.6.8 Undervoltage & Overvoltage Threshold and Overcurrent Fast Prevention

Function Code	Parameter Name	Setting Range	Default
A5-06	Undervoltage threshold	210 to 420 V	350 V
A5-09	Overvoltage threshold	650 to 820 V	820 V
A5-04	Overcurrent fast prevention	0: Disabled 1: Enabled	1

When DC bus voltage exceeds the setting of A5-06/A5-09, the AC drive detects Err09/Err05–Err07.

It is suggested that overcurrent fast prevention is disabled (A5-04 = 0) in hoist applications such as crane.

6.6.9 Output Overcurrent Protection

This is to provide overcurrent protection for the AC drive.

If the drive's output current is equal to or smaller than the value set in F8-36 and the duration exceeds the value set in F8-37, digital output terminal set for function 36 becomes on.

Figure 6-45 Output current limit

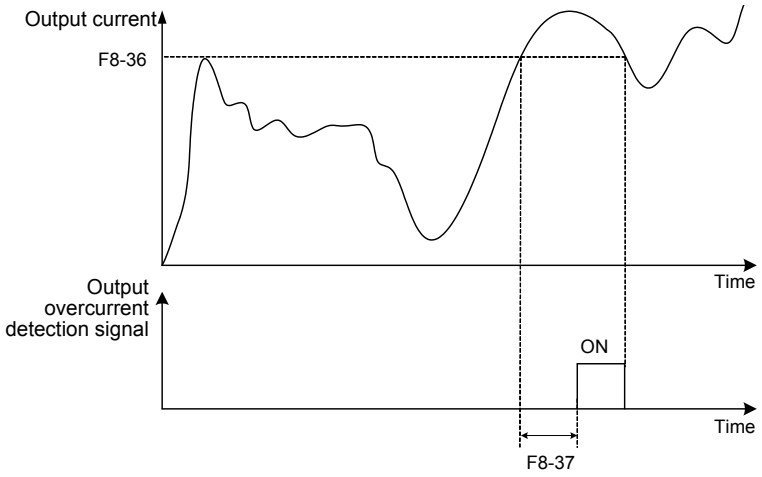

Function Code	Parameter Name	Setting Range	Default
F8-36	Output overcurrent threshold	0.0% (no detection) 0.1% to 300.0% (rated motor current)	200.0%
F8-37	Output overcurrent detection delay	0.00s to 600.00s	0.00s

www.Farazcontrol.com واحد فروش: ۰۹۱۲۹۲۷۵۱۵۹ (مهندس رمضان زاده)

6.7 Monitoring

The monitoring function enables you to view AC drive state in LED display area on the operation panel.

You can monitor AC drive status in the following two ways:

- View F7-03, F7-04 and F7-05 by pressing ▷ on the operation panel.
- View parameters in group U0 via the operation panel

■ View F7-03, F7-04 and F7-05 by Pressing the Shift Key

A maximum of 32 parameters in the running status can be viewed in F7-03 and F7-04. The display starts from the lowest bit of F7-03. A total of 13 parameters in the stop can be viewed in F7-05.

If a parameter needs to be displayed during running, set corresponding bit to 1, convert the binary number to hexadecimal equivalent, and set related parameter to hexadecimal number.

For example, to view running frequency, bus voltage, output voltage, output current, output power and PID reference, do as follows:

- Set bit 0, bit 2, bit 3, bit 4, bit 5 and bit 15 of F7-03 to 1 and convert binary number 1000 0000 0011 1101 to equivalent hexadecimal number 803D.

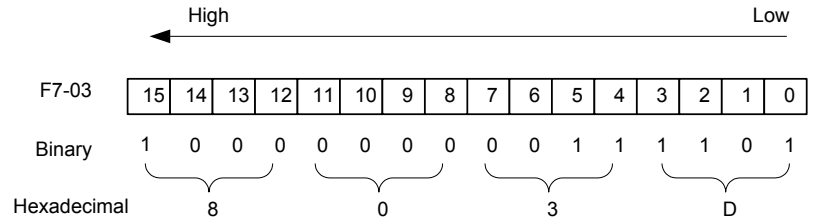

- Press the ENTER key on the operation panel.

  The operation panel displays F7-04.

- Press the PRG key twice on the operation panel.

  The display of the operation panel starts from bit 0 (the lowest bit) in F7-03.

- Press the ▷ key to view the running frequency, bus voltage, output voltage, output current, output power and the PID reference.

You can view the other parameters in the same way.

Conversion of numbers

The following table tells you how to convert a binary number into the hexadecimal equivalent.

Binary	1111	1110	1101	1100	1011	1010	1001	1000	0111	0110	0101	0100	0011	0010	0001	0000
Decimal	15	14	13	12	11	10	9	8	7	6	5	4	3	2	1	0
Hex	F	E	D	C	B	A	9	8	7	6	5	4	3	2	1	0

Every four binary digits from right to left corresponds to a hexadecimal digit. If the highest binary digit is 0, fill up it with 0. Then convert the binary number into decimal equivalent and then convert the decimal number into hexadecimal equivalent.

For example, the binary number is 011 1101 1111 1001. The highest binary digit is 0 and you need to fill up it with 0. The complete binary number is 0011 1101 1111 1001. According to the preceding table, the hexadecimal equivalent is 3DF9.

www.Farazcontrol.com واحد فروش: ۰۹۱۲۹۲۷۵۱۵۹ (مهندس رمضان زاده)

Function Code	Parameter Name	Setting Range	Default
F7-03	LED display running parameters 1	0000 to FFFF 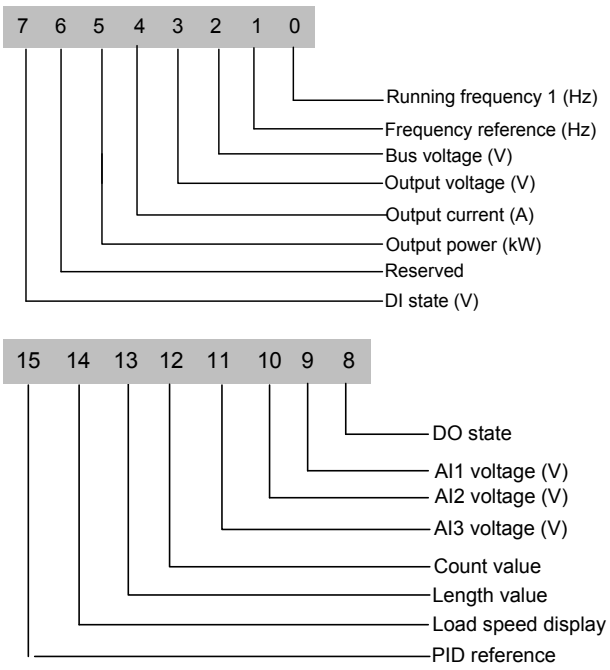 If a parameter needs to be displayed during running, set corresponding bit to 1, and set F7-03 to hexadecimal equivalent.	1F
F7-04	LED display running parameters 2	0000 to FFFF 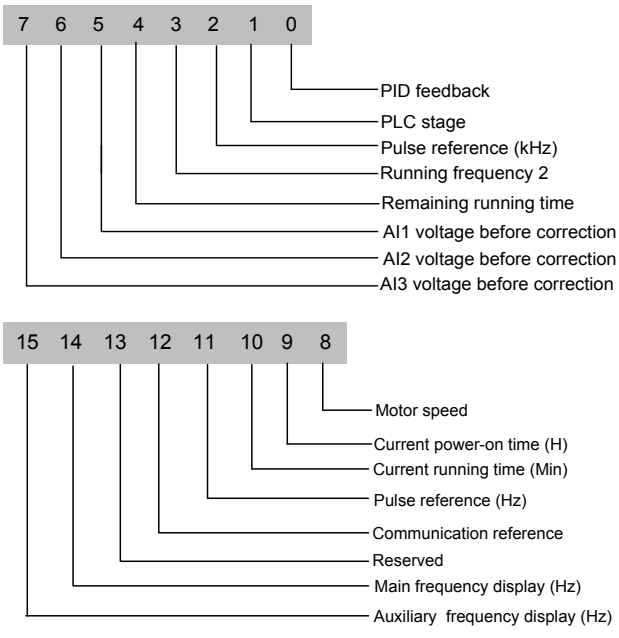 If a parameter needs to be displayed during running, set corresponding bit to 1, and set F7-04 to hexadecimal equivalent.	0

www.Farazcontrol.com واحد فروش: ۰۹۱۲۹۲۷۵۱۵۹ (مهندس رمضان زاده)

Function Code	Parameter Name	Setting Range	Default
F7-05	LED display stop parameters	0000 to FFFF 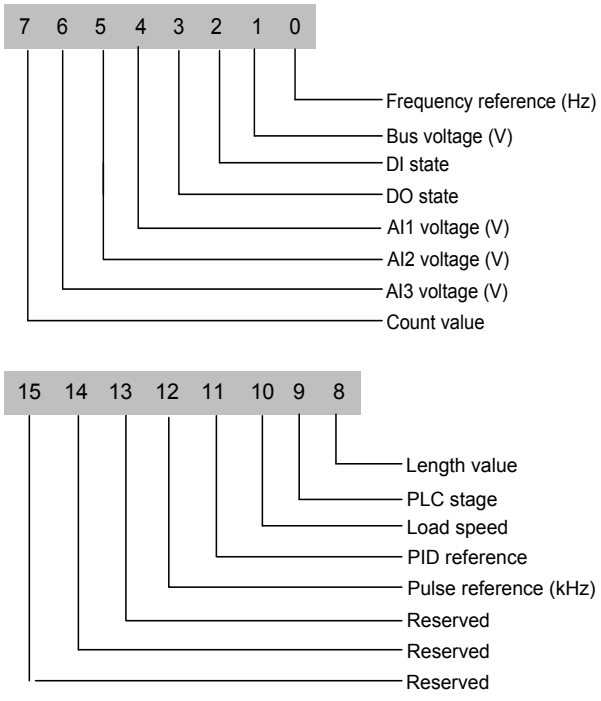 If a parameter needs to be displayed during running, set corresponding bit to 1, and set F7-05 to hexadecimal equivalent.	1F

Note	• Once the AC drive is re-powered on after power down, the display includes the selected parameters before power down by default. • If parameters to be monitored cannot be found in F7-03, F7-04 and F7-05, view them in group U0.

■ View Parameters in Group U0

You can view parameter values by using operation panel, convenient for on-site commissioning, or from the host computer by means of communication (address: 0x7000-0x7044).

U0-00 to U0-31 are the monitoring parameters in the running and stop status defined by F7-03 and F7-04.

Function Code	Parameter Name	Display Range
Group U0: Monitoring Parameters		
U0-00	Running frequency	0.00 to 500.00 Hz
U0-01	Frequency reference	0.00 to 500.0 Hz
U0-02	Bus voltage	0.0 to 3000.0 V
U0-03	Output voltage	0 to 1140 V
U0-04	Output current	0.00 to 655.35 A (AC drive power ≤ 55 kW) 0.0 to 6553.5 A (AC drive power > 55 kW)
U0-05	Output power	0 to 32767

Function Code	Parameter Name	Display Range
U0-07	DI state	0 to 32767

www.Farazcontrol.com واحد فروش: ۰۹۱۲۹۲۷۵۱۵۹ (مهندس رمضان زاده)

U0-07: It displays state of DI terminals. After the value is converted into a binary number, each bit corresponds to a DI. “1” indicates high level signal, and “0” indicates low level signal. The corresponding relationship between bits and DIs is described in the following table:

Bit0	Bit1	Bit2	Bit3	Bit4	Bit5	Bit6	Bit7	Bit8	Bit9
DI1	DI2	DI3	DI4	DI5	DI6	DI7	DI8	DI9	DI10
Bit10	Bit11	Bit12	Bit13	Bit10	Bit11	Bit12	Bit13	Bit14	Bit15
VDI1	VDI2	VDI3	VDI4	VDI1	VDI2	VDI3	VDI4	VDI5	-

Function Code	Parameter Name	Display Range
U0-08	DO state	0 to 1023

U0-08: It displays state of DO terminals. After the value is converted into a binary number, each bit corresponds to a DO. "1" indicates high level signal, and "0" indicates low level signal. The corresponding relationship between bits and DOs is described in the following table.

Bit0	Bit1	Bit2	Bit3	Bit4	Bit5
DO3	Relay 1	Relay 2	DO1	DO2	VDO1
Bit6	Bit7	Bit8	Bit9	Bit10	Bit11
VDO2	VDO3	VDO4	VDO5	-	-

Function Code	Parameter Name	Display Range
U0-10	AI2 voltage (V)/current (mA)	0.00 to 10.57 V 0.00 to 20.00 mA

U0-10: Whether AI2 receives voltage input or current input is determined by setting of jumper J9 on the control board.

Function Code	Parameter Name	Display Range
U0-14	Load speed display	0 to rated motor speed
U0-15	PID reference	0 to 65535
U0-16	PID feedback	0 to 65535
U0-18	Pulse reference	0.00 to 100.00 kHz

Function Code	Parameter Name	Display Range
U0-19	Feedback speed	-320.00 to 320.00 Hz -500.0 to 500.0 Hz

U0-19: It displays actual output frequency of the AC drive.

The tens position of F7-12 (Number of decimal places for load speed display) determines the number of decimal places of U0-19.

- If the tens position is set to 2, the display range is -320.00 to 320.00 Hz.
- If the tens position is set to 1, the display range is -500.0 to 500.0 Hz.

Function Code	Parameter Name	Display Range
U0-20	Remaining running time	0.0 to 6500.0 min

U0-20: It displays remaining running time during drive timing running.

www.Farazcontrol.com واحد فروش: ۰۹۱۲۹۲۷۵۱۵۹ (مهندس رمضان زاده)

Function Code	Parameter Name	Display Range
U0-21	AI1 voltage before correction	0.00 to 10.57 V
U0-22	AI2 voltage (V)/ current (mA) before correction	0.00 to 10.57 V 0.00 to 20.00 mA
U0-23	AI3 voltage before correction	-10.57 to 10.57 V

U0-21 to U0-23: They display sampled AI input voltage (before correction). Actually used AI input voltage after correction are displayed in U0-09, U0-10 and U0-11.

Function Code	Parameter Name	Display Range
U0-24	Motor speed	0 to rated motor speed

U0-24: It displays linear speed of DI5 used for high-speed pulse sampling. The unit is meter/ minute. Linear speed is obtained according to actual number of pulses sampled per minute and Fb-07 (Number of pulses per meter).

Function Code	Parameter Name	Display Range
U0-27	Pulse reference	0 to 65535 Hz

U0-27: It displays DI5 high-speed pulse sampling frequency, in minimum unit of 1 Hz. It is the same as U0-18, except for difference in units.

Function Code	Parameter Name	Display Range
U0-28	Communication reference	-100.00% to 100.00%

U0-28: It displays data written by means of communication address 0x1000.

Function Code	Parameter Name	Display Range
U0-30	Main frequency reference	0.00 to 500.00 Hz
U0-31	Auxiliary frequency reference	0.00 to 500.00 Hz
U0-34	Motor temperature	0°C to 200°C
U0-37	Power factor angle	-

Function Code	Parameter Name	Display Range
U0-39	Target voltage upon V/F separation	0 V to rated motor voltage
U0-40	Output voltage upon V/F separation	0 V to rated motor voltage

U0-39 and U0-40: They display target output voltage and current actual output voltage in V/F separation status.

Function Code	Parameter Name	Display Range
U0-41	DI state display	-

U0-41: It displays DI state and the display format is shown as below:

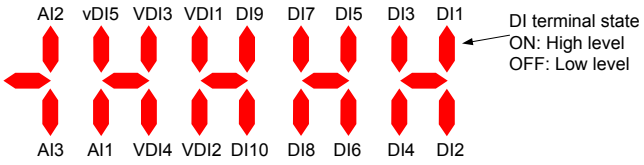

Function Code	Parameter Name	Display Range
U0-42	DO state display	-

www.Farazcontrol.com واحد فروش: ۰۹۱۲۹۲۷۵۱۵۹ (مهندس رمضان زاده)

U0-42: It displays DO state and the display format is shown as below:

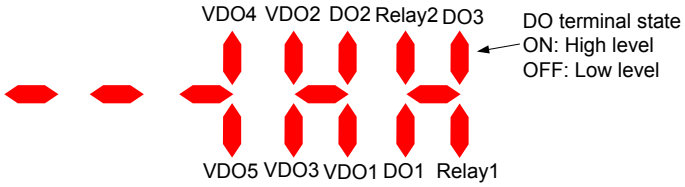

Function Code	Parameter Name	Display Range
U0-43	DI set for function state display 1	-

U0-43: It displays whether DI terminals set for functions 1 to 40 are active. The operation panel has five 7-segment LEDs and each 7-segment LED displays selection of eight functions. The 7-segment LED is defined as below:

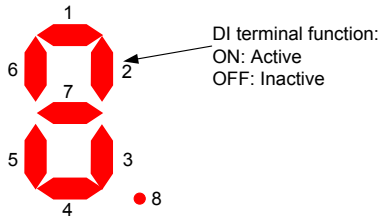

Function Code	Parameter Name	Display Range
U0-44	DI set for function state display 2	-

U0-44: It displays whether DI terminals set for functions 41 to 59 are active. The display format is similar to U0-43. The 7-segment LEDs display functions 41–48, 49–56 and 57–59, respectively from right to left.

Function Code	Parameter Name	Display Range
U0-59	Frequency Reference	-100.00% to 100.00%
U0-60	Running frequency	-100.00% to 100.00%

Function Code	Parameter Name	Display Range
U0-61	AC drive state	0 to 65535

U0-61: It displays the drive state. The data format is listed in the following table:

Bit0 Bit1	0: Stop 1: Forward 2: Reverse
Bi2 Bit3	0: Constant 1: Accelerate 2: Decelerate
Bit4	0: Bus voltage normal 1: Undervoltage

Function Code	Parameter Name	Display Range
U0-62	Current fault code	0 to 99
U0-64	Number of slaves	0 to 63

www.Farazcontrol.com واحد فروش: ۰۹۱۲۹۲۷۵۱۵۹ (مهندس رمضان زاده)

6.8 Process Control

This section introduces three commonly used process control functions, the wobble function, fixed length and counting.

6.8.1 The Wobble Function

The wobble function is applicable to industries such as textile and chemical fiber and winding and unwinding applications. It indicates output frequency wobbles up and down with frequency reference as center.

Figure 6-46 Application of the wobble function

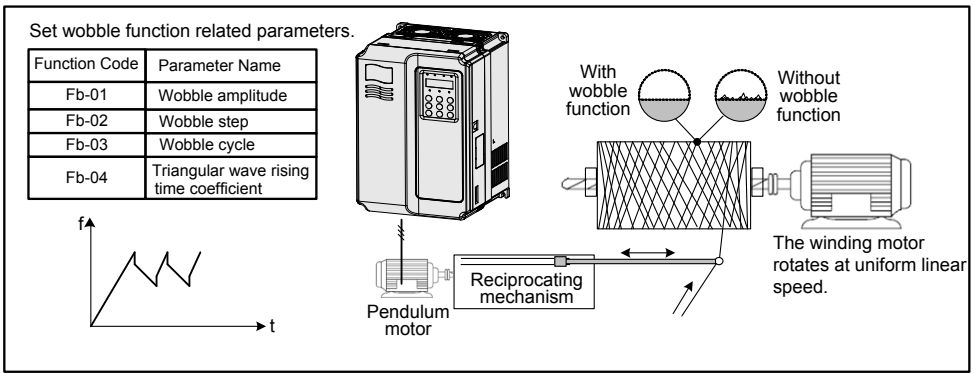

The trace of running frequency at time axis is shown in the following figure.

Figure 6-47 The wobble function schematic diagram

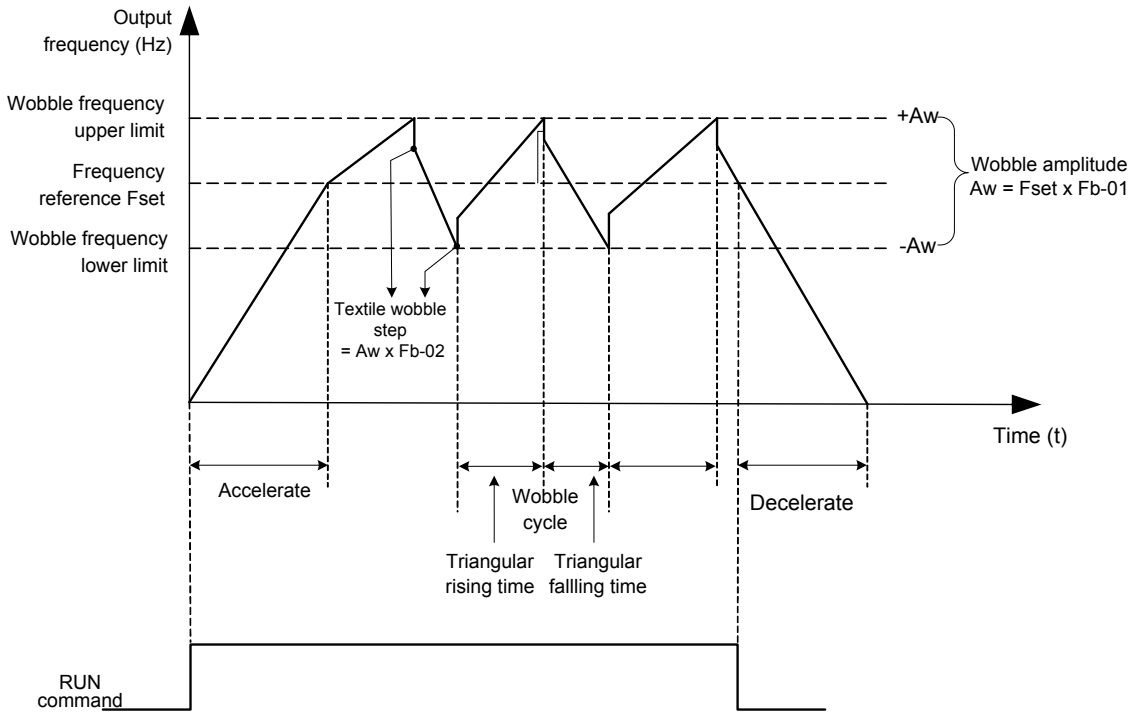

www.Farazcontrol.com واحد فروش: ۰۹۱۲۹۲۷۵۱۵۹ (مهندس رمضان زاده)

Related function parameters are as follows:

Function Code	Parameter Name	Setting Range	Default
Fb-00	Wobble setting mode	0: Relative to the frequency reference 1: Relative to the max. frequency	0

This function parameter selects base value of wobble amplitude.

Function Code	Parameter Name	Setting Range	Default
Fb-01	Wobble amplitude	0.0% to 100.0%	0.0%
Fb-02	Wobble step	0.0% to 50.0%	0.0%

Fb-01 and Fb-02: These function parameters set wobble amplitude and wobble step.

- When Fb-00 = 0, Aw (wobble amplitude) = F0-07 (Frequency source superposition selection) x Fb-01.
- When Fb-00 = 1, Aw (wobble amplitude) = F0-10 (Max. frequency) x Fb-01.

Wobble step frequency = Aw (wobble amplitude) x Fb-02 (Wobble step). The wobble running frequency must be within frequency upper limit and frequency lower limit.

Function Code	Parameter Name	Setting Range	Default
Fb-03	Wobble cycle	0.0s to 3000.0s	10.0s
Fb-04	Triangular wave rising time coefficient	0.0% to 100.0%	50.0%

Fb-03: It specifies time of a complete wobble cycle.

Fb-04: It is percentage of triangular wave rising time to Fb-03 (Wobble cycle).

- Triangular wave rising time = Fb-03 (Wobble cycle) x FB-04 (Triangular wave rising time coefficient, unit: s)
- Triangular wave falling time = Fb-03 (Wobble cycle) x (1 - Fb-04 Triangular wave rising time coefficient, unit: s)

www.Farazcontrol.com واحد فروش: ۰۹۱۲۹۲۷۵۱۵۹ (مهندس رمضان زاده)

6.8.2 Fixed Length Control

The drive has the fixed length control function. The length pulses can only be sampled by DI5. Set DI5 for function 27 "Length signal pulses count".

Function Code	Parameter Name	Setting Range	Default
Fb-05	Set length	0 to 65535 m	1000 m
Fb-06	Actual length	0 to 65535 m	0 m
Fb-07	Number of pulses per meter	0.1 to 6553.5	100.0

In the following figure, actual length is a monitored value.

Actual length (Fb-06) = Number of pulses sampled by DI is divided by Fb-07 (Number of pulses each meter).

When actual length reaches the value set in Fb-05, digital output terminal set for function 10 “Length reached” becomes on. Length reset can be implemented via DI terminal set for function 28 "Length reset".

Figure 6-48 Fixed length control

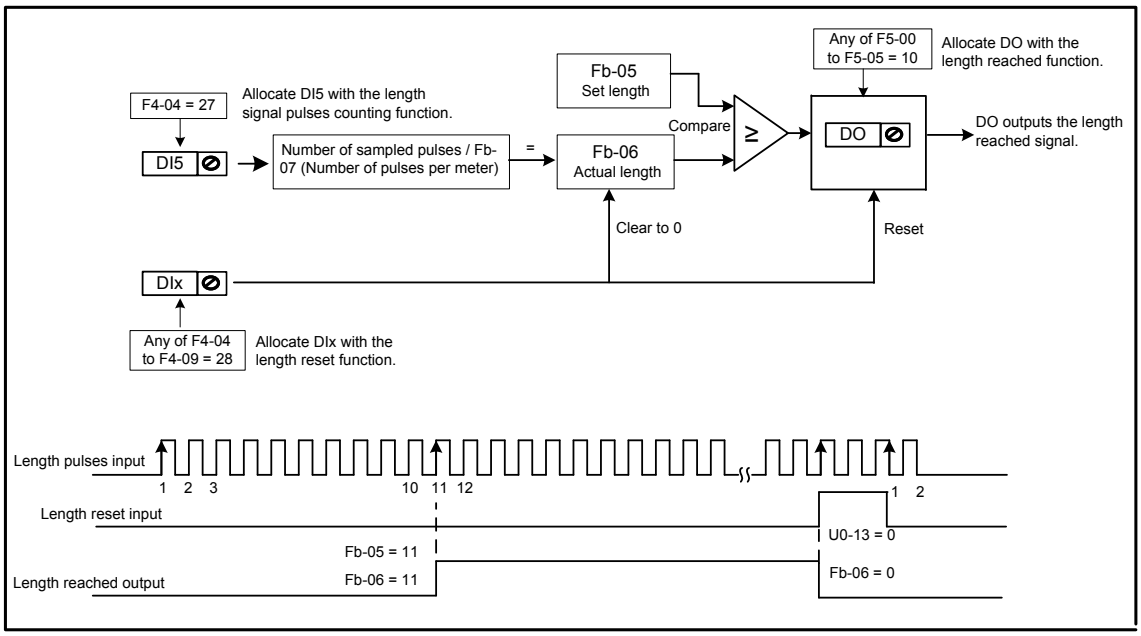

Settings of related function parameters in the preceding figure are as follows:

Function Code	Parameter Name	Setting	Description
F4-04	DI5 function selection	27	Length pulses counting input
Any of F4-00 to F4-09	DIx function selection	28	Length reset
Any of F5-00 to F5-05	DOx function selection	10	Length reached

Note	• Only length can be calculated according the number of pulses but rotation direction will not be obtained in fixed length control. • An automatic stop system can be implementing by connecting output length reached signal of relay to the stop input terminal.

www.Farazcontrol.com واحد فروش: ۰۹۱۲۹۲۷۵۱۵۹ (مهندس رمضان زاده)

6.8.3 Counting

The drive has the counting function. The sampling DI terminal must be set for function 25 "Counter input ". For high pulse frequency, use terminal DI5.

Function Code	Parameter Name	Setting Range	Default
Fb-08	Set count value	1 to 65535	1000
Fb-09	Designated count value	1 to 65535	1000

In the following figure, When the counting value reaches the level set in Fb-08, digital output terminal set for function 8 "Set count value reached" becomes on. When the counting value reaches the level set in Fb-09, digital output terminal set for function 9 "Designated count value reached" becomes on.

Figure 6-49 Counting function

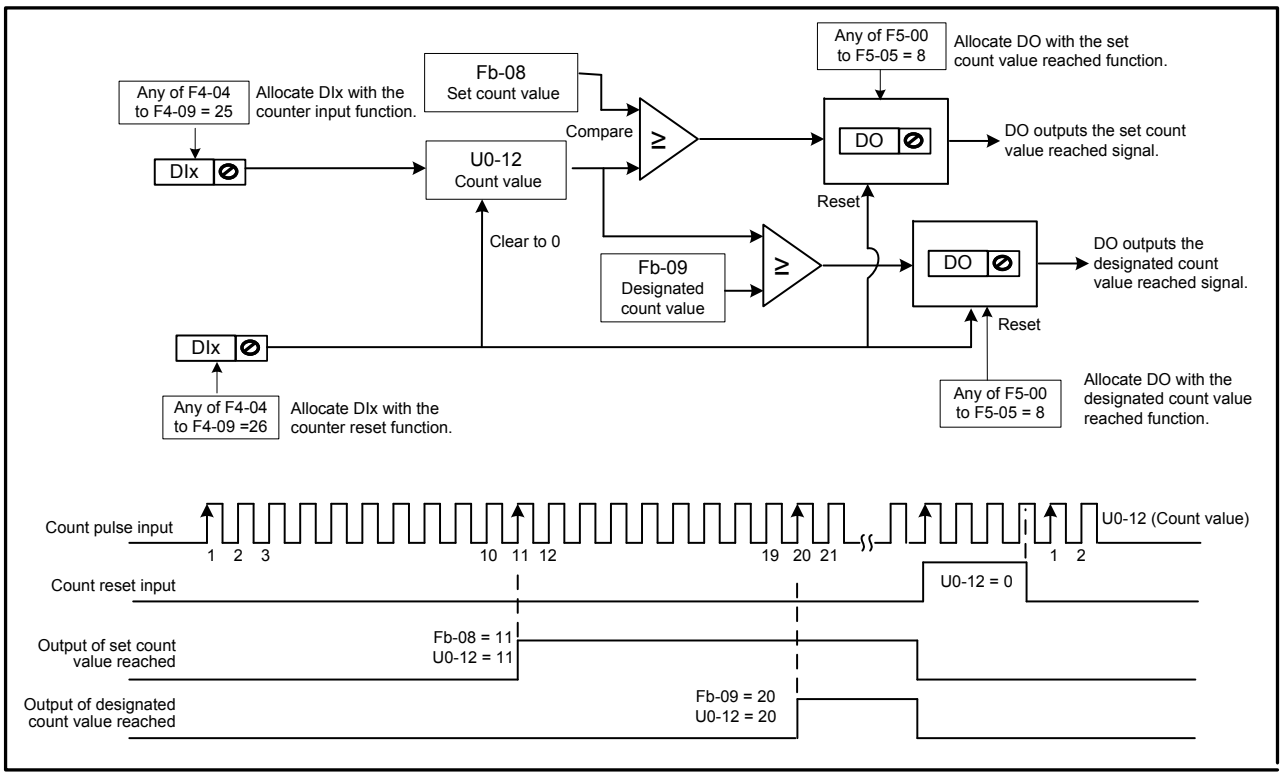

The settings of related function parameters in the preceding figure are as follows:

Function Code	Parameter Name	Setting	Description
Any of F4-00 to F4-09	DIx function selection	25	Counter input
Any of F4-00 to F4-09	DIx function selection	26	Counting reset
Any of F5-00 to F5-05	DOx function selection	8	Set counting value reached
Any of F5-00 to F5-05	DOx function selection	9	Designated counting value reached

Note	
	• For high pulse frequency, use terminal DI5. • You cannot allocate "Set counting value reached" function and "Designated counting value reached" function to the same DO terminal. • The counter keeps counting in the drive running/stop status. It stops counting until the set counting value is reached. • The counting value is retentive at power down. • An automatic stop system can be implementing by connecting the output counting value reached signal of DO to the stop input terminal.

www.Farazcontrol.com واحد فروش: ۰۹۱۲۹۲۷۵۱۵۹ (مهندس رمضان زاده)

6.8.4 Motor 2 Parameters

The drive supports driving two motors at different time. For the two motors, you can:

- Set motor nameplate parameters respectively
- Perform motor auto-tuning respectively
- Select V/F control or vector control respectively
- Set encoder-related parameters respectively
- Set parameters related to V/F control or vector control independently

Motor 2 parameters are defined the same as motor 1 parameters. For details on motor 1 parameters, see descriptions of these parameters in *6.4 Motor Auto-tuning*.

You can select the desired motor parameter group in F0-24 or via a DI terminal

1. Select the desired motor parameter group in F0-24.

Function Code	Parameter Name	Setting Range	Default
F0-24	Motor parameter group selection	0: Motor parameter group 1 1: Motor parameter group 2	0

2. Select the desired motor parameter group via a DI terminal.

   Set any DI (F4-00 to F4-09) for function 41 "Motor selection". If the DI is inactive, motor parameter group 1 is selected. If the DI is active, motor parameter group 2 is selected.

Function Code	Parameter Name	Setting	Description
Any of F4-00 to F4-09	DIx function selection	41	Motor selection

Note	
	• If any of F4-00 to F4-09 is set for function 41 “Motor selection”, DI terminal overrides F0-24. If none of F4-00 to F4-09 is set for function 41 “Motor selection”, motor selection is determined by F0-24. • Switchover of two groups of motor parameters is prohibited during drive running. Otherwise, the drive detects Err41.

Function Code	Parameter Name	Setting Range	Default
A2-00	Motor type selection	0 to 1	0
A2-01	Rated motor power	0.1 to 1000.0 kW	Model dependent
A2-02	Rated motor voltage	1 to 2000 V	Model dependent
A2-03	Rated motor current	0.01 to 655.35 (AC drive power ≤ 55 kW) 0.1 to 6553.5 (AC drive power > 55 kW)	Model dependent
A2-04	Rated motor frequency	0.01 to max. frequency	Model dependent
A2-05	Rated motor speed	1 to 65535	Model dependent
A2-06	Stator resistance	0.001 to 65.535 (AC drive power ≤ 55 kW) 0.0001 to 6.5535 (AC drive power > 55 kW)	Auto-tuning parameter
A2-07	Rotor resistance	0.001 to 65.535 (AC drive power ≤ 55 kW) 0.0001 to 6.5535 (AC drive power > 55 kW)	Auto-tuning parameter

www.Farazcontrol.com واحد فروش: ۰۹۱۲۹۲۷۵۱۵۹ (مهندس رمضان زاده)

Function Code	Parameter Name	Setting Range	Default
A2-08	Leakage inductive reactance	0.01 to 655.35 (AC drive power ≤ 55 kW) 0.001 to 65.535 (AC drive power > 55 kW)	Auto-tuning parameter
A2-09	Mutual inductive reactance	0.1 to 6553.5 (AC drive power ≤ 55 kW) 0.01 to 655.35 (AC drive power > 55 kW)	Auto-tuning parameter
A2-10	No-load current	0.01 to F1-03 (AC drive power ≤ 55 kW) 0.1 to F1-03 (AC drive power > 55 kW)	Auto-tuning parameter

6.8.5 User Programmable Card

You can implement control of the AC drive by PLC programming by connecting user programmable card MD38PC1 to the drive to satisfy various process requirements.

For details of MD38PC1, see the User Programmable Card User Manual. The function of this card must be used together with parameters in group A7.

Figure 6-50 User programmable function

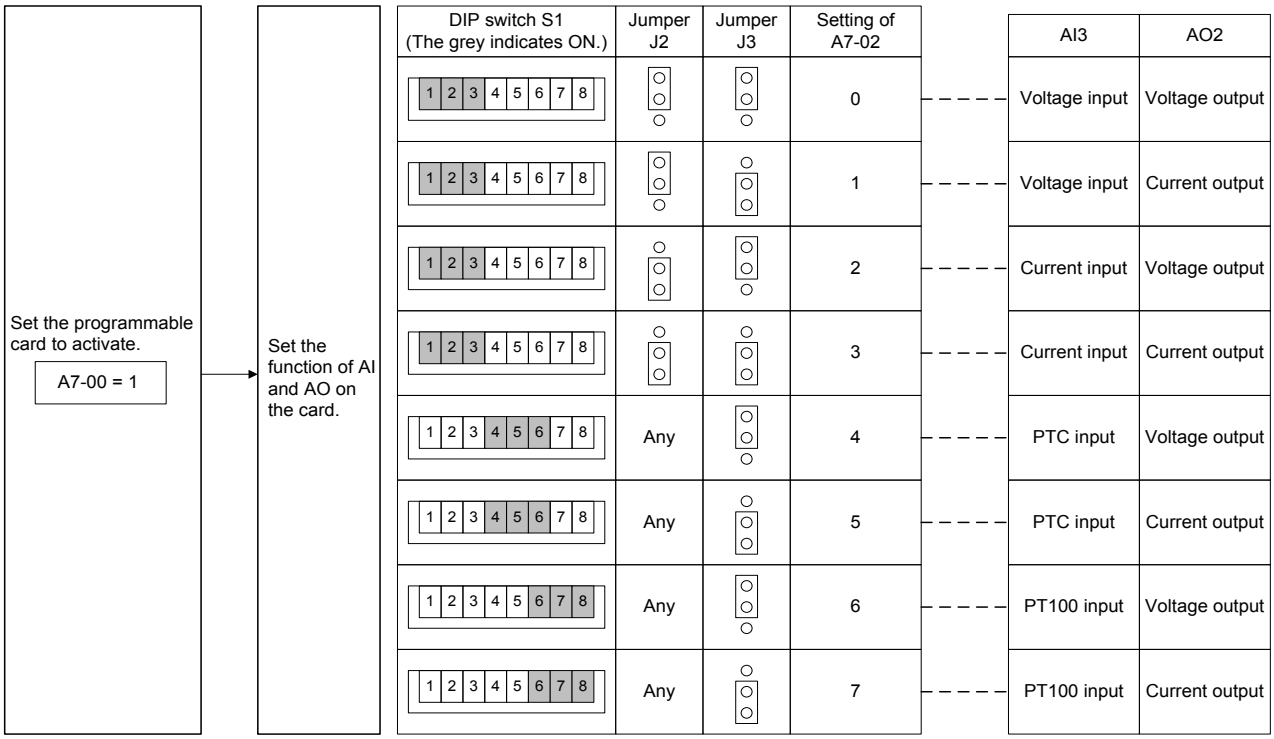

www.Farazcontrol.com واحد فروش: ۰۹۱۲۹۲۷۵۱۵۹ (مهندس رمضان زاده)

Figure 6-51 User programmable function (2)

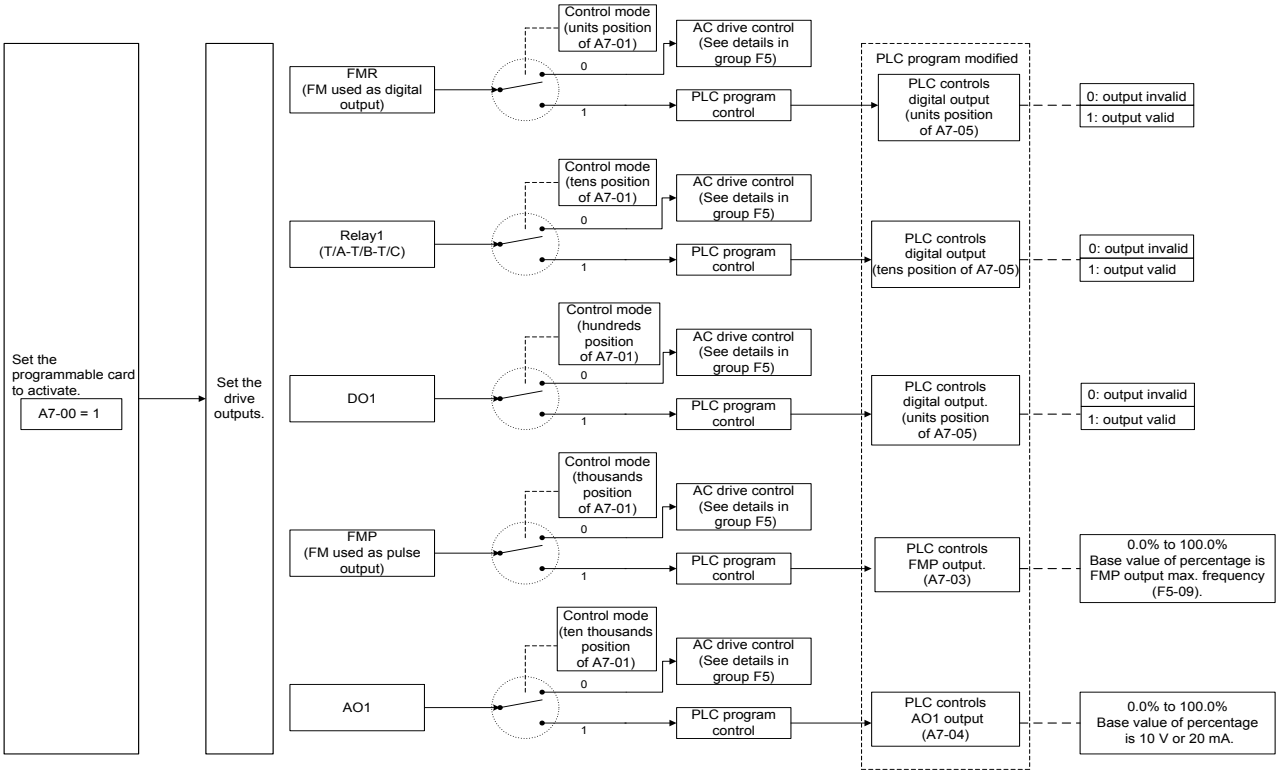

Figure 6-52 The user programmable use schematic (3)

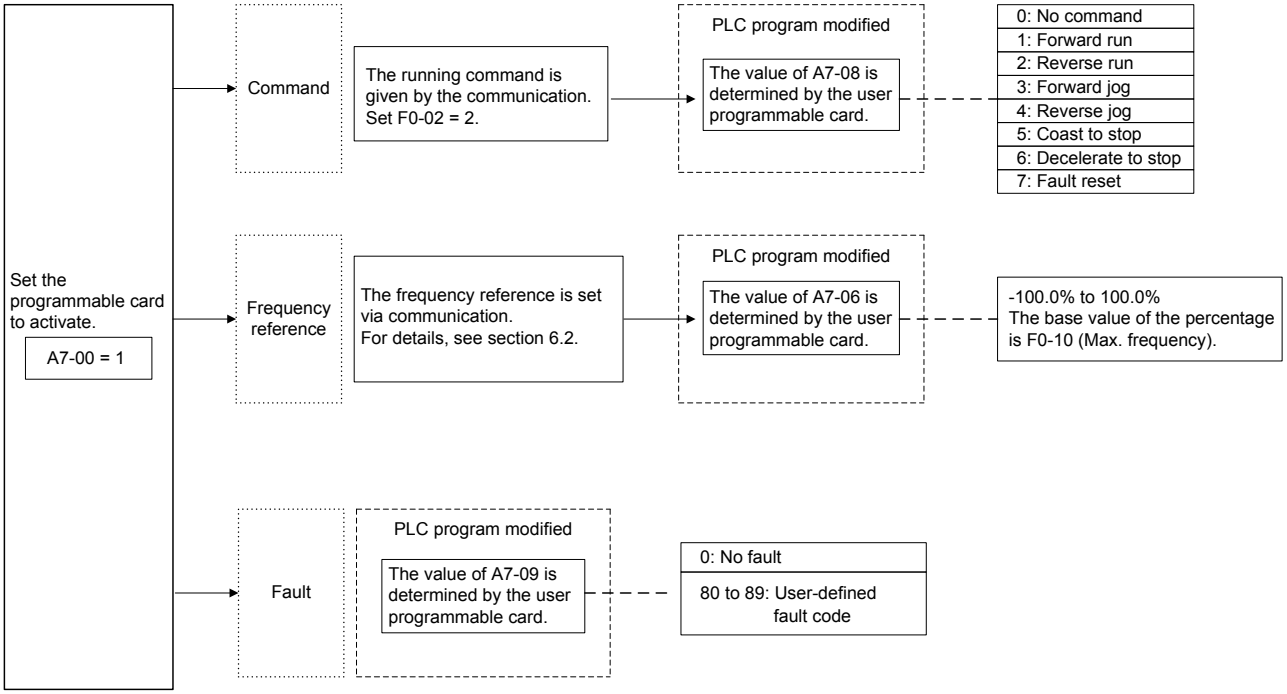

www.Farazcontrol.com واحد فروش: ۰۹۱۲۹۲۷۵۱۵۹ (مهندس رمضان زاده)

■ Parameter Settings of Controlling MD290 by PLC Programming Function

1. Set whether user programmable card is valid.

Function Code	Parameter Name	Setting Range	Default
A7-00	User programmable function selection	0: Disabled 1: Enabled	0

2. Set AI3 and AO2 function on user programmable card.

Function Code	Parameter Name	Setting Range	Default
A7-02	User programmable card AI3 and AO2 function selection	0 to 7 0: AI3 (voltage input), AO2 (voltage output) 1: AI3 (voltage input), AO2 (current output) 2: AI3 (current input), AO2 (voltage output) 3: AI3 (current input), AO2 (current output) 4: AI3 (PTC input), AO2 (voltage output) 5: AI3 (PTC input), AO2 (current output) 6: AI3 (PT100 input), AO2 (voltage output) 7: AI3 (PT100 input), AO2 (current output)	0

The user programmable card provides an analog input terminal AI3 and an analog output terminal AO2. Set DIP switch S1, jumper J2 and jumper J3 on the card and then set A7-02. Setting of S1, S2 and J3 must be consistent with setting in A7-02. Otherwise, communication will be abnormal.

3. Set the AC drive output signals

When A7-00 = 1 (user programmable card is enabled), you can set control source of output terminals (FMR, relay, DO1, FMP and AO1) of the AC drive in A7-01.

When an output terminal is controlled by PLC program, output of terminal is determined by setting of corresponding function parameter A7-03/A7-04/A7-05.

You can implement control of output terminal via PLC program by modifying A7-03/A7-04/A7-05.

www.Farazcontrol.com واحد فروش: ۰۹۱۲۹۲۷۵۱۵۹ (مهندس رمضان زاده)

Function Code	Parameter Name	Setting Range	Default
A7-01	AC drive output terminal control source selection	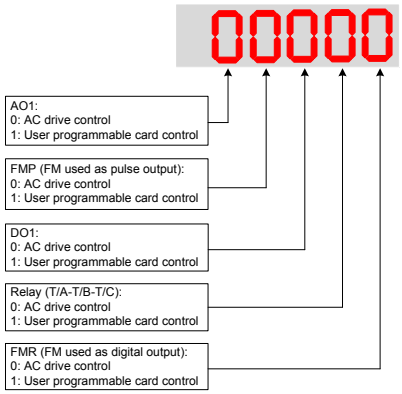	00000
A7-03	PLC program controls the FMP output	0.0% to 100.0%	0.0%
A7-04	PLC program controls the AO1 output	0.0% to 100.0%	0.0%
A7-05	Selection of PLC program controlling digital output	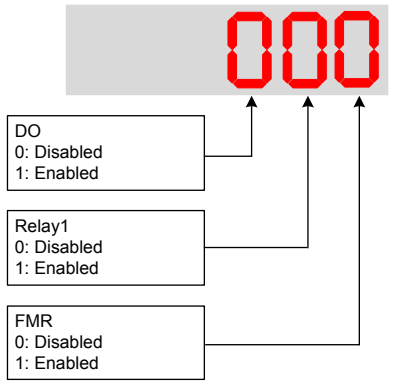	000

The base value of A7-03 is F5-09 (Max. FMP output frequency). The base value of A7-04 is 10 V (voltage output) or 20 mA (current output).

www.Farazcontrol.com واحد فروش: ۰۹۱۲۹۲۷۵۱۵۹ (مهندس رمضان زاده)

1. Set running command

   When F0-02 = 2 (the command source is communication) and A7-00 = 1 (the user programmable card is enabled), drive running is controlled by setting of A7-08.

   You can implement control of the AC drive via PLC program by operating corresponding D component.

Function Code	Parameter Name	Setting Range	Default
A7-08	Setting running command via the user programmable card	0 to 7 0: No command 1: Forward run 2: Reverse run 3: Forward jog 4:Reverse jog 5: Coast to stop 6: Decelerate to stop 7: Fault reset	0

2. Set frequency reference

   When frequency reference setting channel is communication and A7-00 = 1 (user programmable card is enabled), frequency reference of the AC drive is determined by setting of A7-06.

   You can implement control of frequency reference of AC drive via PLC program by operating corresponding D component.

Function Code	Parameter Name	Setting Range	Default
A7-06	Setting frequency reference via the user programmable card	-100.00% to 100.00%	0.00%

   The base value of this parameter is F0-10 (Max. frequency).

3. Set user-defined faults.

   When A7-00 = 1 (user programmable card is enabled), you can set user defined faults Err80 to Err89 by operating corresponding D component to change setting of A7-09 in the range of 80 to 89.

Function Code	Parameter Name	Setting Range	Default
A7-09	Setting torque reference via the user programmable card	0: No fault 80 to 89: User defined fault code	0

   If setting of A7-09 is out of 80 to 89, the setting will not take effect.

www.Farazcontrol.com واحد فروش: ۰۹۱۲۹۲۷۵۱۵۹ (مهندس رمضان زاده)

■ Droop Control

The droop control function aims at balancing the load level of two motors that drive the same load. This function is required only when both master and slave are in speed control.

A proper droop rate is gradually obtained during drive running. Therefore, do not set F8-15 to a very large value. Otherwise, steady speed will decline obviously when load is very large. You must set this parameter in both master and slave.

Figure 6-53 Relationship between droop rate and output torque

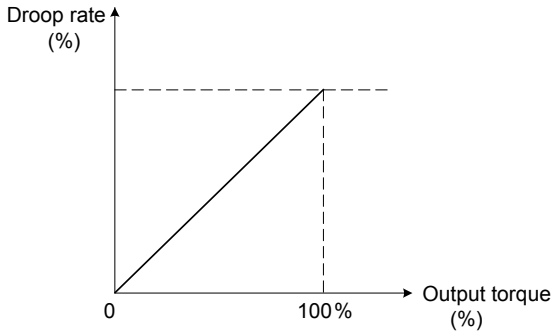

- Droop speed = rated motor frequency x output torque x droop rate
- Actual AC drive frequency = frequency reference - droop speed

Suppose that F8-15 is set to 10.0%, rated motor frequency is 50 Hz, and output torque is 50%. Actual drive frequency = 50 Hz – 50 x 50% x 10.0% = 47.5 Hz.

Note	Setting range 0.0% to 100.0% of F8-15 correspond to 0.00 to 10.00 on operating panel.

6

Function Code	Parameter Name	Setting Range	Default
A8-00	Point-point communication	0: Disabled 1: Enabled	0

This function parameter determines whether to enable point-point communication.

The point-point communication indicates direct communication between two or more drives via CANlink. The master sends frequency or torque reference to slaves based on frequency or torque signal it receives.

When connecting multiple AC drives via CANlink card, install a terminal resistor to the CANlink card of the end drive.

Once this function is enabled, CANlink communication addresses of the master and slaves are matched automatically. The baud rate is set in Fd-00.

Function Code	Parameter Name	Setting Range	Default
A8-01	Master or slave selection	0: Master 1: Slave	0

This function parameter determines whether the AC drive is master or slave.

www.Farazcontrol.com واحد فروش: ۰۹۱۲۹۲۷۵۱۵۹ (مهندس رمضان زاده)

Function Code	Parameter Name	Setting Range	Default
A8-02	Selection of action of the slave in point-point communication	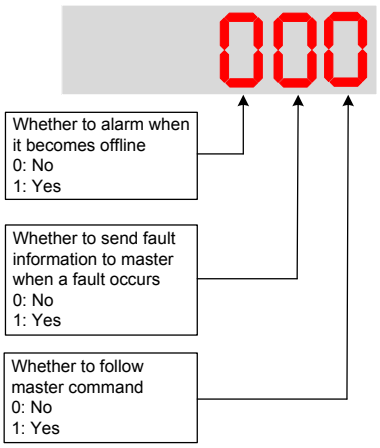	011

When AC drive is the slave (A8-01 = 1) in serial comms. control (F0-02 = 2), this function determines whether it follows the master to run/stop, whether it sends fault information to the master when a fault occurs, and whether it alarms when it becomes offline.

Function Code	Parameter Name	Setting Range	Default
A8-03	The slave received data	0: Output frequency 1: Frequency reference	0

- A8-03 = 0: If F8-15 ≠ 0, the master sends its frequency after droop control to the slave. It is applicable to droop control or speed synchronization control (slave in speed control). In load sharing control (slave in torque control), the master sends its output frequency to the slave. In this case, ensure F8-15 = 0.
- A8-03 = 1: The master sends its frequency reference to the slave.

Function Code	Parameter Name	Setting Range	Default
A8-04	Zero offset of received data	-100.00 to 100.00	0.00
A8-05	Gain of received data	-10.00 to 10.00	1.00

These two function parameters correct received data.

Function Code	Parameter Name	Setting Range	Default
A8-06	Point-point communication interruption detection time	0.0s to 10.0s	1.0s

This function parameter sets time required to detect communication interruption of the master or slave. To disable the detection function, set this parameter to 0.

Function Code	Parameter Name	Setting Range	Default
A8-07	Master data sending cycle in point-point communication	0.001s to 10.000s	0.001s

This function parameter sets data sending cycle of the master in point-point communication.

Function Code	Parameter Name	Setting Range	Default
A8-11	Window width	0.20 to 10.00 Hz	0.5 Hz

This function parameter is effective only for the master and slave control mode. Modify the setting to ensure synchronization of the master and slave speed within window width.

www.Farazcontrol.com واحد فروش: ۰۹۱۲۹۲۷۵۱۵۹ (مهندس رمضان زاده)

6.9 Control Circuit Terminals

This section describes functions of DI, DO, virtual DI, virtual DO, AI and AO terminals.

6.9.1 Function of DI Terminals

Function Code	Parameter Name	Setting Range	Default
F4-00	DI1 function selection	0 to 59	1
F4-01	DI2 function selection	0 to 59	4
F4-02	DI3 function selection	0 to 59	9
F4-03	DI4 function selection	0 to 59	12
F4-04	DI5 function selection	0 to 59	13
F4-05	DI6 function selection	0 to 59	0
F4-06	DI7 function selection	0 to 59	0
F4-07	DI8 function selection	0 to 59	0
F4-08	DI9 function selection	0 to 59	0
F4-09	DI10 function selection	0 to 59	0

These function parameters allocate ten digital terminals with functions. There are five digital terminals on the control board, DI1 to DI5. There are five additional digital terminals on the optional I/O extension board, DI6 to DI10.

The functions of digital input terminals are described in the following figure.

Value	Function	Description
0	No function	Set reserved terminals to 0 to avoid malfunction.
1	Forward run (FWD)	The DI terminals selecting these two functions control forward and reverse running of the AC drive.
2	Reverser run (REV)	
3	Three-wire control	The DI terminal set for this function determines three-wire control mode of the AC drive.
4	Forward jog (FJOG)	FJOG indicates forward jog running, and RJOG indicates reverse jog running. Jog frequency, jog acceleration time and jog deceleration time are described respectively in F8-00, F8-01 and F8-02.
5	Reverse jog (RJOG)	
6	Terminal UP	The terminals selecting these two functions are used for increment and decrement when frequency reference is input via external DI terminal, or when frequency source is digital setting.
7	Terminal DOWN	
8	Coast to stop	When terminal set for this function becomes on, the drive shuts off output and the stop process of motor is not controlled by the drive. It means the same as coast to stop described in F6-10.
9	Fault reset (RESET)	You can perform fault reset via DI terminal set for this function. It is the same as function of the RESET key on the operation panel. Remote fault reset is implemented by this function.
10	RUN disabled	When the terminal set for this function becomes on, the AC drive decelerates to stop and retains all running parameters, such as PLC, wobble and PID parameters. Once the terminal becomes off, the AC drive resumes the running status before stop.
11	External fault NO input	When terminal set for this function becomes on, the drive detects ERR15 and performs fault protection. For details, see *F9-47*.

www.Farazcontrol.com (مهندس رمضان زاده)۰۹۱۲۹۲۷۵۱۵۹ :واحد فروش

Value	Function	Description
12	Multi-reference terminal 1	16 speeds or 16 other references can be implemented through combinations of 16 states of these four terminals.
13	Multi-reference terminal 2	
14	Multi-reference terminal 3	
15	Multi-reference terminal 4	
16	Terminal 1 for acceleration/ deceleration time selection	Totally four groups of acceleration/deceleration time can be selected through combinations of four states of these two terminals.
17	Terminal 2 for acceleration/ deceleration time selection	
18	Frequency reference setting channel switchover	The terminal set for this function is used to perform switchover between two frequency reference setting channels according to setting in F0-07.
19	UP and DOWN setting clear (terminal, operation panel)	If the frequency source is digital setting, the terminal set for this function is used to clear the modification by using the UP/DOWN function or the increment/decrement key on the operation panel, restoring the frequency reference to the value of F0-08.
20	Command source switchover 1	If command source is terminal control (F0-02 = 1), this terminal is used to perform switchover between terminal control and operation panel control. If command source is communication control (F0-02 = 2), this terminal is used to perform switchover between communication control and operation panel control.
21	Acceleration/Deceleration prohibited	This function ensures the AC drive to maintain current frequency output without being affected by external signals (except STOP command).
22	PID disabled	This function disables the PID function. The AC drive maintains current frequency output without supporting PID adjustment of frequency reference.
23	PLC state reset	When the simple PLC function is enabled again after it was disabled in execution process, this function restores original state of simple PLC for the AC drive
24	Wobble disabled	When terminal set for this function becomes on, the wobble function becomes disabled and the drive outputs center frequency.
25	Counter input	Terminal set for this function is used to count pulses.
26	Counter reset	Terminal set for this function is used to clear counter.
27	Length signal pulses count	Terminal set for this function is used to count pulses of the length signal.
28	Length reset	The terminal set for this function is used to clear length.
30	Pulse input as frequency reference (valid only for DI5)	DI5 is used for pulse input as frequency reference.
31	Reserved	-
32	Immediate DC injection braking	Once the terminal set for this function becomes on, the AC drive directly switches over to DC injection braking state.

www.Farazcontrol.com واحد فروش: ۰۹۱۲۹۲۷۵۱۵۹ (مهندس رمضان زاده)

Value	Function	Description
33	External fault NC input	Once terminal set for this function becomes on, the AC drive detects ERR15 and stops.
34	Frequency modification enabled	When terminal set for this function becomes on, the AC drive responds to frequency modification.
35	PID operation direction reverse	When terminal set for this function becomes on, PID operation direction is reversed to direction set in FA-03.
36	External stop 1	In operation panel control, the terminal set for this function can be used to stop the AC drive, equivalent to function of the STOP key on the operation panel.
37	Command source switchover 2	Terminal set for this function is used to perform switchover between terminal control and communication control. If command source is terminal control, the AC drive switches over to communication control after the terminal becomes ON.
38	PID integral disabled	When terminal set for this function becomes on, the integral function becomes disabled. However, the proportional and differentiation functions are still effective.
39	Switchover between main frequency reference and preset frequency	When terminal set for this function becomes on, the frequency reference is replaced by preset frequency set in F0-08.
40	Switchover between auxiliary frequency reference and preset frequency	When terminal set for this function becomes on, frequency reference is replaced by preset frequency set in F0-08.
41	Motor selection	Switchover between motor 1 and motor 2 can be implemented through two state combinations of terminal set for this function.
42	Reserved	-
43	PID parameter switchover	If PID parameters switchover is done via DI terminal (FA-18 = 1), PID parameters are FA-05 to FA-07 when terminal set for this function becomes off; PID parameters are FA-15 to FA-17 when terminal set for this function becomes on.
44	User-defined fault 1	If terminals selecting these two functions become on, the AC drive detects Err27 and Err28 respectively, and performs fault protection based on setting of F9-49.
45	User-defined fault 2	
47	Emergency stop (ES)	When the ES terminal becomes on, the AC drive decelerates based on the setting of F8-55 (deceleration time for emergency stop). If F8-55 = 0 in V/F control, the AC drive decelerates based on the setting of F0-19 (Acceleration/Deceleration time unit). The AC drive will not operate when the ES terminal is ON even if the terminal receiving RUN command is ON. In this case, to make the AC drive operate again, turn off the terminal receiving RUN command and then turn it on.
48	External stop 2	This function enables the AC drive to decelerate to stop in any control mode (operation panel, terminal or communication). In this case, the deceleration time is deceleration time 4.
49	Deceleration DC injection braking	When terminal set for this function becomes on, the AC drive decelerates to DC injection braking 2 frequency threshold and then switches over to DC injection braking state.

www.Farazcontrol.com واحد فروش: ۰۹۱۲۹۲۷۵۱۵۹ (مهندس رمضان زاده)

Value	Function	Description
50	Clear running time this time	When terminal set for this function becomes on, current running time of the AC drive is cleared. This function must be supported by F8-42 and F8-53.
51	Two-wire control/ Three-wire control	This function enables the AC drive to switch over between two-wire control and three-wire control. If F4-11 is set to two-wire control mode 1, the AC drive switches over to three-wire control mode 1 when terminal set for this function becomes on.
52	Reverse running prohibited	When terminal set for this function becomes on, reverse running of the AC drive is prohibited. It is the same as function of F8-13.
53 to 59	Reserved	-

Function Code	Parameter Name	Setting Range	Default
F4-35	DI1 delay	0.0s to 3600.0s	0.0s
F4-36	DI2 delay	0.0s to 3600.0s	0.0s
F4-37	DI3 delay	0.0s to 3600.0s	0.0s

When state of DI terminals changes, these three function parameters set delay time of the change. Now the drive supports delay function on DI1, DI2 and DI3 only.

Function Code	Parameter Name	Setting Range	Default
F4-38	DI active mode selection 1	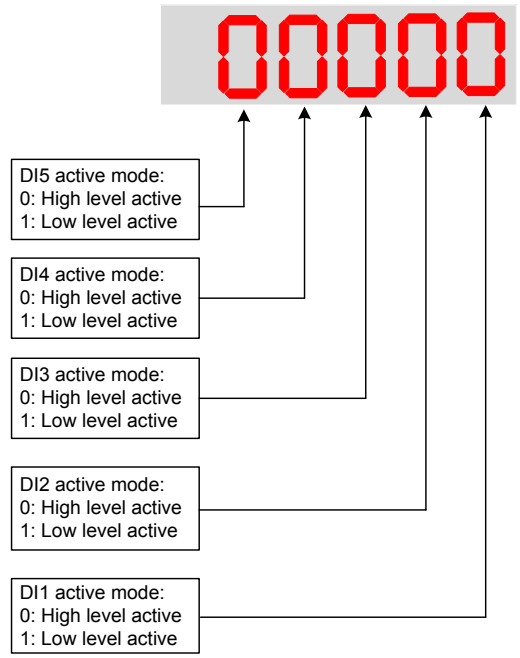	00000

www.Farazcontrol.com واحد فروش: ۰۹۱۲۹۲۷۵۱۵۹ (مهندس رمضان زاده)

Function Code	Parameter Name	Setting Range	Default
F4-39	DI active mode selection 2	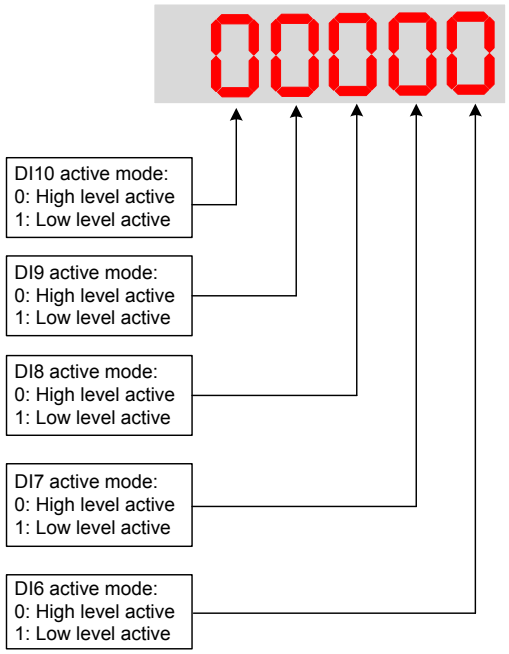	00000

These two function parameters set active mode of DI terminals.

- 0: High level active

  If a high level voltage is applied to DI terminal, the DI signal will be seen as active. That is, the DI terminal becomes active when being connected with COM, and inactive when being disconnected from COM.

- 1: Low level active

  If a low level voltage is applied to DI terminal, the DI signal will be seen as active. That is, the DI terminal becomes active when being disconnected from COM, and inactive when being connected with COM.

6.9.2 Function of DO Terminals

The drive provides a digital output (DO) terminal, an analog output (AO) terminal, a relay terminal and an FM terminal (either high-speed pulse output or open-collector output).

Extra AO terminal (AO2), relay terminal (relay2) and DO terminal (DO2) are provided by the I/O extension card.

Function Code	Parameter Name	Setting Range	Default
F5-00	FM terminal output mode	0: Pulse output (FMP) 1: Digital output (FMR)	0

This function parameter is a programmable multiplexing terminal and determines whether FM terminal is high-speed pulse output (FMP) or open-collector output (FMR). When used for high-speed pulse output, max. output frequency is 100 kHz. For details, see the description of *F6-05*.

Function Code	Parameter Name	Setting Range	Default
F5-01	FMR function selection	0 to 41	0
F5-02	Relay (T/A-T/B-T/C) function selection	0 to 41	2
F5-03	Extension card relay (P/A-P/B-P/C) function selection	0 to 41	0
F5-04	DO1 function selection	0 to 41	1
F5-05	Extension card DO2 function selection	0 to 41	4

www.Farazcontrol.com واحد فروش: ۰۹۱۲۹۲۷۵۱۵۹ (مهندس رمضان زاده)

These five function parameters select the function of the five digital output terminals.

T/A-T/B-T/C is the relay of the drive and P/A-P/B-P/C is the relay on the I/O extension card.

The functions of the digital output terminals are described in the following figure.

Value	Function	Description
0	No output	Terminal has no function.
1	AC drive running	When the AC drive is running and has output frequency (can be zero), terminal set for this function becomes on.
2	Fault output	When a fault occurs and the AC drive stops due to the fault, terminal set for this function becomes on.
3	Frequency level detection 1 output	Refer to descriptions of *F8-19* and *F8-20*.
4	Frequency reached	Refer to descriptions of *F8-21*.
5	Zero-speed running (no output at stop)	When output frequency is 0 during drive running, terminal set for this function becomes on. When the drive stops, terminal becomes off.
6	Motor overload pending	The AC drive judges motor overload pre-warning according to pre-warning threshold before performing overload protection. If this threshold is exceeded, terminal set for this function becomes on. For motor overload parameters, see descriptions of *F9-00* to *F9-02*.
7	AC drive overload pending	Terminal set for this function becomes on 10s before the AC drive performs overload protection.
8	Set count value reached	Terminal set for this function becomes on when count value reaches the value set in Fb-08.
9	Designated count value reached	Terminal set for this function becomes on when count value reaches value set in Fb-09.
10	Length reached	Terminal set for this function becomes on when detected actual length exceeds value set in Fb-05.
11	PLC cycle completed	Terminal set for this function outputs a pulse signal with width of 250 ms when simple PLC completes one cycle.
12	Accumulative running time reached	Terminal set for this function becomes on when accumulative running time of the AC drive exceeds value set in F8-17.
13	Frequency limited	Terminal set for this function becomes on when frequency reference exceeds frequency upper or lower limit, and output frequency of the AC drive also reaches the upper or lower limit.
15	Ready for RUN	Terminal set for this function becomes on when the AC drive is ready to drive motor (Power applied to main circuit and control circuit is normal, and no fault is detected).
16	AI1 > AI2	When AI1 input is greater than AI2 input, terminal set for this function becomes on.
17	Frequency upper limit reached	When running frequency reaches frequency upper limit, terminal set for this function becomes on.
18	Frequency lower limit reached (no output at stop)	When running frequency reaches frequency lower limit, terminal set for this function becomes on. When the AC drive is in stop status, terminal set for this function becomes off.
19	Undervoltage	Terminal set for this function becomes on when undervoltage occurs on AC drive.

www.Farazcontrol.com واحد فروش: ۰۹۱۲۹۲۷۵۱۵۹ (مهندس رمضان زاده)

Value	Function	Description
20	Communication setting	Whether terminal is active or inactive is determined by communication address 0x2001.
21	Reserved	-
22	Reserved	-
23	Zero-speed running 2 (having output at stop)	When output frequency is 0 during drive running, terminal set for this function becomes on. When the drive stops, terminal remains on.
24	Accumulative power-on time reached	Terminal set for this function becomes on when accumulative power-on time of the AC drive (F7-13) exceeds value set in F8-16.
25	Frequency level detection 2	Refer to descriptions of *F8-28* and *F8-29*.
26	Frequency 1 reached	Refer to descriptions of *F8-30* and *F8-31*.
27	Frequency 2 reached	Refer to descriptions of *F8-32* and *F8-33*.
28	Current 1 reached	Refer to descriptions of *F8-38* and *F8-39*.
29	Current 2 reached	Refer to descriptions of *F8-40* and *F8-41*.
30	Timing reached	On the condition that the timing function is enabled (F8-42 = 1), terminal set for this function becomes on when current running time of the AC drive reaches the set time.
31	AI1 input exceeding limit	Terminal set for this function becomes on when AI1 input is larger than value set in F8-46 (AI1 input voltage upper limit) or smaller than value set in F8-45 (AI1 input voltage lower limit).
32	Load lost	Terminal set for this function becomes on when load gets lost.
33	Reverse running	Terminal set for this function becomes on when the AC drive runs in reverse direction.
34	Zero current	Refer to descriptions of *F8-34* and *F8-35*.
35	IGBT temperature reached	Terminal set for this function becomes on when heatsink temperature of AC drive IGBT (F7-07) reaches IGBT temperature threshold (F8-47).
36	Output current exceeding limit	Refer to descriptions of *F8-36* and *F8-37*.
37	Frequency lower limit reached (having output at stop)	The terminal set for this function becomes on when the running frequency reaches the frequency lower limit. When the drive stops, the terminal remains on.
38	Alarm output	If a fault occurs on the AC drive and the AC drive continues to run, terminal set for this function outputs an alarm signal.
39	Motor overheat pending	Terminal set for this function becomes on when motor temperature reaches value set in F9-58 (Motor overheat pending threshold). You can view motor temperature by using U0-34.
40	Current running time reached	Terminal set for this function becomes on when current running time of the AC drive exceeds value set in F8-53.
41	Fault output	When a fault occurs on the AC drive (except undervoltage), terminal set for this function becomes on.

www.Farazcontrol.com واحد فروش: ۰۹۱۲۹۲۷۵۱۵۹ (مهندس رمضان زاده)

Function Code	Parameter Name	Setting Range	Default
F5-17	FMR output delay	0.0s to 3600.0s	0.0s
F5-18	Relay 1 output delay	0.0s to 3600.0s	0.0s
F5-19	Relay 2 output delay	0.0s to 3600.0s	0.0s
F5-20	DO1 output delay	0.0s to 3600.0s	0.0s
F5-21	DO2 output delay	0.0s to 3600.0s	0.0s

These parameters set output delay of terminals FMR, relay1, relay2, DO1 and DO2 from state change.

Function Code	Parameter Name	Setting Range	Default
F5-22	DO active mode selection 1	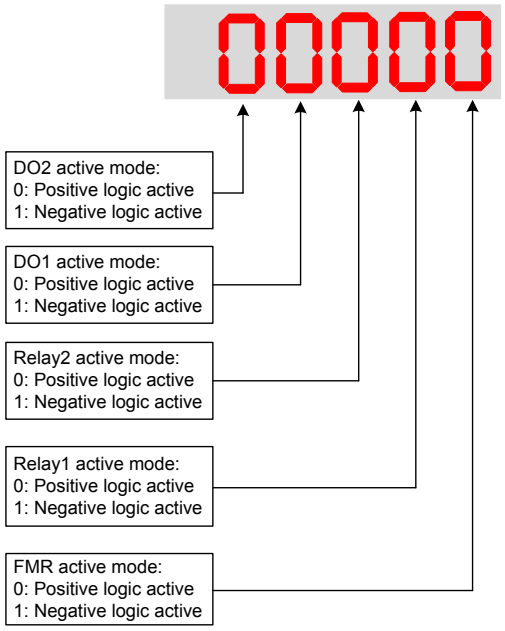	00000

This function parameter sets active mode of terminals FMR, relay1, relay2, DO1 and DO2.

- 0: Positive logic active

  Digital output terminal becomes active when being connected with COM, and inactive when being disconnected from COM.

- 1: Negative logic active

  Digital output terminal becomes active when being disconnected from COM, and inactive when being connected with COM.

www.Farazcontrol.com واحد فروش: ۰۹۱۲۹۲۷۵۱۵۹ (مهندس رمضان زاده)

6.9.3 Function of VDI Terminals

VDI terminals have the same functions as DI terminals do. They can be used for multi-functional digital inputs.

Function Code	Parameter Name	Setting Range	Default
A1-00	VDI1 function selection	0 to 59	0
A1-01	VDI2 function selection	0 to 59	0
A1-02	VDI3 function selection	0 to 59	0
A1-03	VDI4 function selection	0 to 59	0
A1-04	VDI5 function selection	0 to 59	0

These function parameters set function to the five virtual DI terminals VDI1 to VD15, which have the same digital input functions (0 to 59) as ten DI terminals do. For more details, see description of *F4-00* to *F4-09*.

Function Code	Parameter Name	Setting Range	Default
A1-05	VDI active state setting mode	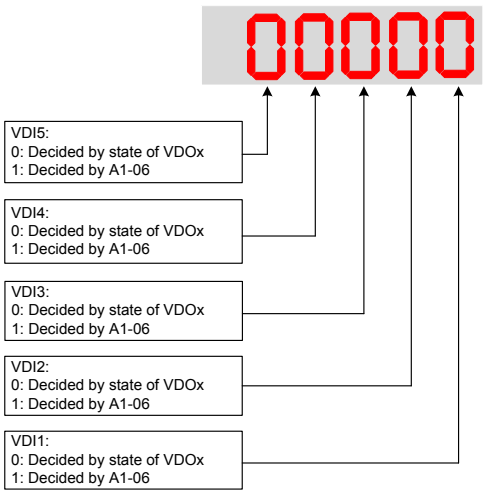	00000
A1-06	Selection of VDI active state	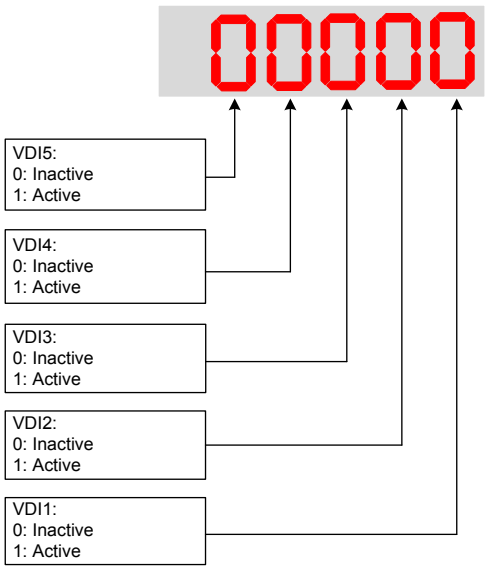	00000

www.Farazcontrol.com (مهندس رمضان زاده)۰۹۱۲۹۲۷۵۱۵۹ واحد فروش:

These function parameters determine active mode of VDI1 to VD15.

- 0: Decided by state of VDOx

  To enable the AC drive to detect a fault and stop when input from AI1 input reaches limit, perform the following settings:

  – Set A1-00 to 44 to set VDI1 for function 44 “User-defined fault 1”.
  – Set A1-05 to xxx0 to determine VDI1 active state by state of VDOx.
  – Set A1-11 to 31 to set VDO1 for function 31 “AI1 input exceeding limit”.

  When input from AI1 reaches limit, VDO1 becomes on. Then, VDI1 becomes on and the AC drive receives user-defined fault.

- 1: Decided by A1-06

  To enable the AC drive to automatically enter running status after power-on, perform the following settings:

  – Set A1-00 to 1 to set VDI1 for function 1 “Forward RUN (FWD)”.
  – Set A1-05 to xxx1 to determine VDI1 active state by state of A1-06.
  – Set F0-02 to 1 to use terminal control as command source.
  – Set F8-18 to 0 to disable start protection.

  After completing initialization at power-on, the AC drive detects that VDI1 set for function FWD is active. This means the AC drive receives forward run command from VDI1 and starts forward running.

6.9.4 Function of VDO Terminals

VDO terminals have the same digital output functions (1 to 41) as DO terminals do. The VDO can be used together with VDIx to implement some simple logic control.

Function Code	Parameter Name	Setting Range	Default
A1-11	VDO1 function selection	0: Short with physical DIx internally 1 to 40	0
A1-12	VDO2 function selection	0: Short with physical DIx internally 1 to 40	0
A1-13	VDO3 function selection	0: Short with physical DIx internally 1 to 40	0
A1-14	VDO4 function selection	0: Short with physical DIx internally 1 to 40	0
A1-15	VDO5 function selection	0: Short with physical DIx internally 1 to 40	0
A1-16	VDO1 output delay	0.0s to 3600.0s	0.0s
A1-17	VDO2 output delay	0.0s to 3600.0s	0.0s
A1-18	VDO3 output delay	0.0s to 3600.0s	0.0s
A1-19	VDO4 output delay	0.0s to 3600.0s	0.0s
A1-20	VDO5 output delay	0.0s to 3600.0s	0.0s
A1-21	VDO active mode selection	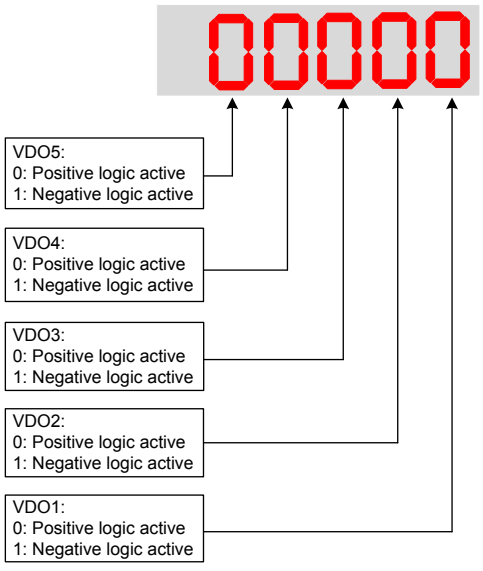	00000

www.Farazcontrol.com واحد فروش: ۰۹۱۲۹۲۷۵۱۵۹ (مهندس رمضان زاده)

6.9.5 Function of the AI Terminals

The drive provides two AI terminals (AI1, AI2). An extra AI terminal (AI3) is provided by I/O extension card.

Here use AI terminals as DI. When AI input voltage is higher than 7 V, AI is in high level state. When AI input voltage is lower than 3 V, AI is in low level state. AI is in hysteresis state between 3 V and 7 V.

Figure 6-54 Relationship between AI input voltage and DI state

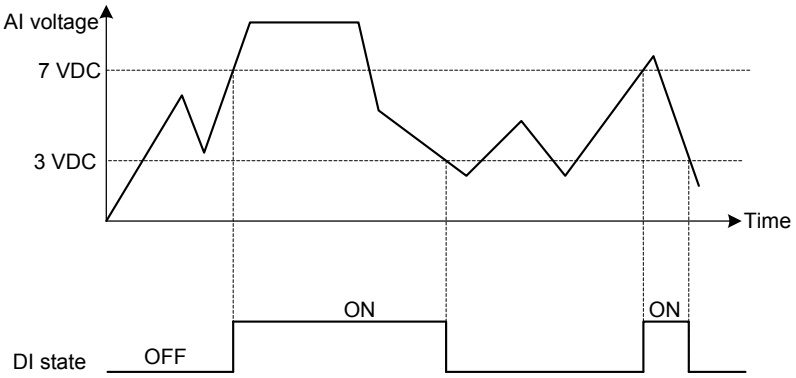

Function Code	Parameter Name	Setting Range	Default
A1-07	Function selection for AI1 used as DI	0 to 59	0
A1-08	Function selection for AI2 used as DI	0 to 59	0
A1-09	Function selection for AI3 used as DI	0 to 59	0
A1-10	Active state selection for AI used as DI	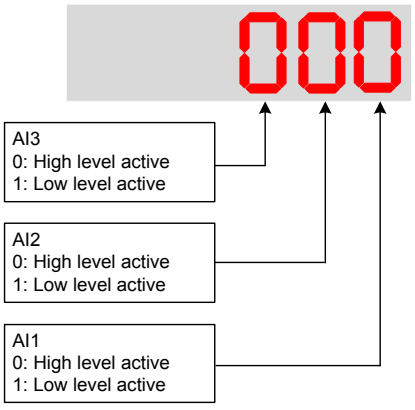	000

www.Farazcontrol.com واحد فروش: ۰۹۱۲۹۲۷۵۱۵۹ (مهندس رمضان زاده)

6.9.6 Function of the AO and Pulse Output Terminals

The drive provides an AO terminal (AO1). An extra AO terminal (AO2) is provided by the I/O extension card (MD38IO1).

Function Code	Parameter Name	Setting Range	Default
F5-00	FM terminal output mode	0: Pulse output (FMP) 1: Digital output (FMR)	0
F5-06	FMP function selection	0 to 16	0
F5-07	AO1 function selection	0 to 16	0
F5-08	AO2 function selection	0 to 16	1

These parameters select the function of the pulse output terminal and the two analog output terminals.

The pulse output frequency range of the FMP terminal is 0.01 kHz to F5-09 (Max. FMP output frequency). F5-09 must be set in the range of 0.01 to 100.00 kHz.

The output range of AO1 and AO2 is 0 to 10 V or 0 to 20 mA.

The functions of the three terminals are listed in the following table.

Value	Output Function	Range (Corresponding to 0.0% to 100.0% of Pulse or Analog Output Range)
0	Running frequency	0 to max. frequency
1	Frequency reference	0 to max. frequency
2	Output current	0 to 2 times of rated motor current
4	Output power	0 to 2 times of rated power
5	Output voltage	0 to 1.2 times of rated AC drive voltage
6	Pulse input	0.01 to 100.00 kHz
7	AI1	0 to 10 V
8	AI2	0 to 10 V (or 0 to 20 mA)
9	AI3	0 to 10 V
10	Length	0 to max. set length
11	Counting value	0 to max. count value
12	Communication reference	0.0% to 100.0%
13	Motor speed	0 to motor speed corresponding to max. output frequency
14	Output current	0.0 to 1000.0 A
15	Output voltage	0.0 to 1000.0 V

Note	Max. value in the range indicates Xmax in the following formulas to calculate AO gain and AO zero offset coefficient.

www.Farazcontrol.com (مهندس رمضان زاده)۰۹۱۲۹۲۷۵۱۵۹ واحد فروش:

Function Code	Parameter Name	Setting Range	Default
F5-09	Max. FMP output frequency	0.01 to 100.00 kHz	50.00 kHz

This function parameter sets maximum pulse output frequency when FM terminal is used for pulse output.

Function Code	Parameter Name	Setting Range	Default
F5-10	AO1 zero offset coefficient	-100.0% to 100.0%	0.0%
F5-11	AO1 gain	-10.00 to 10.00	1.00
F5-12	AO2 zero offset coefficient	-100.0% to 100.0%	0.00%
F5-13	AO2 gain	-10.00 to 10.00	1.00

These four function parameters generally correct zero offset of analog output and output amplitude error. They can also define required AO curve.

Zero offset coefficient 100% of AO1 and AO2 corresponds to 10 V or 20 mA. You can calculate the gain and the zero offset coefficient from the following formulas:

$$K = \frac{(Y1 - Y2) \times Xmax}{(X1 - X2) \times Ymax} \qquad b = \frac{(X1 \times Y2 - X2 \times Y1)}{(X1 - X2) \times Ymax}$$

In the formulas:

- "b" represents zero offset.
- "k" represents gain.
- "X" represents output frequency.
- "Y" represents actual output of the AO.
- " Xmax " represents max. output frequency (determined by F0-10).
- "Ymax" represents max. output 10 V or 20 mA.

For example, AO is used for output of frequency reference. To implement output of 8 V (Y1) at 0 Hz (x1) and output of 4 V (Y2) at 40 Hz (X2) according to the formulas, you can obtain gain and zero offset coefficient as follows:

$$K = \frac{(8 - 4) \times 50}{(0 - 40) \times 10} = -0.5 \qquad b = \frac{(0 \times 4 - 40 \times 8)}{(0 - 40) \times 10} = 80\%$$

Then you can set F5-11 to -0.5 and set F5-10 to 80%.

AO output signal type and corresponding max. value are as follows:

AO1 output signal	Corresponding Max. Output (Ymax)
Voltage	10 V
Current	20 mA

www.Farazcontrol.com واحد فروش: ۰۹۱۲۹۲۷۵۱۵۹ (مهندس رمضان زاده)

6.10 Communication

The drive support communication links, such as Modbus, PROFIBUS-DP, CANlink (always valid), or CANopen.

You can monitor and control of the AC drive, for example, view or modify function parameters by using a host computer.

Make sure to set communication parameters correctly. Otherwise, communication may fail.

Function Code	Parameter Name	Setting Range	Default
F0-28	Serial port communication protocol	0: Modbus protocol 1: PROFIBUS-DP or CANopen protocol	0
Fd-00	Baud rate	0000 to 6039	5005
Fd-01	Modbus data format symbol	0 to 3	0
Fd-02	Local address	0: Broadcast address 1 to 247	1
Fd-03	Modbus response delay	0 to 20	2
Fd-04	Serial port communication timeout	0.0 (Invalid) 0.1 to 60.0	0.0
Fd-05	Modbus protocol selection and PROFIBUS-DP data frame	00 to 31	30
Fd-06	Current resolution read by communication	0 to 1	0
Fd-08	CANlink communication timeout time	0.0 (Invalid) 0.1 to 60.0	0

6.10.1 Read and Write Function Parameters

■ Read Function Parameters

For function parameters in groups F0 to FF and A0 to AF, the highest eight bits in communication address indicate function code group, while the lowest eight bits indicate hexadecimal number converted from SN in function code group.

For example, communication address of F0-16 is F010H, in which F0H indicates function code group F0 and 10H is the hexadecimal number converted from 16.

Communication address of AC-08 is AC08H, in which ACH indicates function code group AC and 08H is the hexadecimal number converted from 8.

To read desired function parameter, host computer needs to send a read command to the AC drive. Here takes the Modbus protocol as an example to describe communication process of reading the drive data.

For example, to read F0-10, read command is 01 03 F0 0A 01 DE D7 (hexadecimal). In the command,

- 01H (settable): AC drive address
- 03H: read command
- F00AH: communication address of F0-10
- 01H: number of function parameters
- DED7H: CRC check

www.Farazcontrol.com واحد فروش: ۰۹۱۲۹۲۷۵۱۵۹ (مهندس رمضان زاده)

Master Command		Slave Response	
ADDR	01H	ADDR	01H
CMD	03H	CMD	03H
Parameter address high bits	F0H	Parameter address high bits	F0H
Parameter address low bits	0AH	Parameter address low bits	0AH
Number of function parameters	01H	Number of function parameters	01H
CRC high bits	DEH	CRC high bits	DEH
CRC low bits	D7H	CRC low bits	D7H
-	-	-	-

■ Write Function Parameters

For function parameters in groups F0 to FF, the highest eight bits in communication address indicate 00 to 0F or F0 to FF according to whether to write parameter to EEPROM, while the lowest eight bits indicate the hexadecimal number converted from SN in function code group.

For example, host computer writes data to F0-16. If not writing to EEPROM, communication address is 0010H. If writing to EEPROM, communication address is F010H.

For function parameters in groups A0 to AF, the highest eight bits in communication address indicate 40 to 4F or A0 to AF according to whether to write parameter to EEPROM, while the lowest eight bits indicate the hexadecimal number converted from SN in function code group.

For example, host computer writes data to AC-08. If not writing to EEPROM, communication address is 4C08H. If writing to EEPROM, communication address is AC08H.

To write data, host computer needs to send a write command to the AC drive. Here takes Modbus protocol as an example to describe communication process of writing data to the AC drive.

For example, to write 2 to AC-16 (not writing to EEPROM), write command is 01064C1000021F5E (hexadecimal). In the command,

- 01H (settable): AC drive address
- 06H: write command
- 4C10H: communication address of AC-16
- 02H: writing data
- 1F5EH: CRC check

Master Command		Slave Response	
ADDR	01H	ADDR	01H
CMD	06H	CMD	06H
Parameter address high bits	4CH	Parameter address high bits	4CH
Parameter address low bits	10H	Parameter address low bits	10H
Writing data high bits	00H	Number of function parameters	00H
Writing data low bits	02H	CRC high bits	02H
CRC high bits	1FH	CRC high bits	1FH
CRC low bits	5EH	CRC low bits	5EH

www.Farazcontrol.com واحد فروش: ۰۹۱۲۹۲۷۵۱۵۹ (مهندس رمضان زاده)

6.10.2 Read and Write State Parameters

State parameters include monitoring parameters in group U (U0 to UF), drive fault information and drive running status.

- The highest 8 bits in communication of parameters in U0 to UF is 70 to 7F, while lowest eight bits indicate the hexadecimal number converted from SN in function code group. For example, communication address of U0-11 is 700BH.
- Communication address of the drive fault information is 8000H. You can obtain current fault codes by using host computer to read the address.
- Communication address of drive running status is 3000H. Word in the read information is defined as 1: forward run, 2: reverse run, 3: stop.

Here takes CANopen protocol as an example to describe communication process of host computer to read drive running status.

First set F0-28 = 1 to select CANopen protocol. Suppose that DIP setting of Node-ID of the AC drive is 0x05 (modifiable, range: 1 to 63), and drive running status is 1: forward run.

The format of message sent by the master is as follows:

Message ID (Hex)	RTR	Data (Hex)
0x605	0	40 30 00 00 00 00 00 00

0x605 = 0x600 + 0x05 (Node-ID DIP setting)

Format of response message returned by the slave is as follows:

Message ID (Hex)	RTR	Data (Hex)
0x585	0	40 30 00 00 00 00 00 00

0x585 = 0x580 + 0x05 (Node-ID DIP setting)

Sending message and response message are described as follows:

Sending Message		Response Message	
Message ID	605H	Message ID	605H
RTR	0 (binary)	RTR	0 (binary)
Read command	40H	Response to read command	4B
Communication address high bits	30H	Communication address high bits	30H
Mapping address	00H	Mapping address	00H
Communication address low bits	00H	Communication address low bits	00H
Reserved	00H	Data low byte	01H
Reserved	00H	Data high byte	00H
Reserved	00H	Data 3	00H
Reserved	00H	Data 4	00H

Note	To read monitoring parameters, drive fault information and other drive running status via CANopen protocol, refer to *Sending message format* and *Sending message format* in the following tables to organize the message.

www.Farazcontrol.com (مهندس رمضان زاده)۰۹۱۲۹۲۷۵۱۵۹ واحد فروش:

Sending message format of read operation is described as follows:

CAN	CANopen Data	Description
11-bit ID	0x600 + Node-ID	The Node-ID of the equipment is set via the DIP switch.
RTR	0	Remote frame sign "0"
DATA0	Command code returned	Correct: 0x4B Incorrect: 0x80
DATA1	Index low byte	Function parameter group (0xF0 for group F0)
DATA2	Index high byte	Mapping address
DATA3	Sub-index	SN in the function parameter group (0x02 for 02)
DATA4	Data 1	Data low byte
DATA5	Data 2	Data high byte
DATA6	Data 3	Correct: 0 Incorrect: SDO operation failed error code
DATA7	Data 4	

Returned message format of read operation is described as follows:

CAN	CANopen Data	Description
11-bit ID	0x580 + Node-ID	The Node-ID of the equipment is set via the DIP switch.
RTR	0	Remote frame sign "0"
DATA0	Command code (0x40)	0x40 read command
DATA1	Index low byte	Function parameter group (0xF0 for group F0)
DATA2	Index high byte	Mapping address
DATA3	Sub-index	SN in the function parameter group (0x02 for 02)
DATA4	Data 1	Reserved
DATA5	Data 2	Reserved
DATA6	Data 3	Reserved
DATA7	Data 4	Reserved

www.Farazcontrol.com واحد فروش: ۰۹۱۲۹۲۷۵۱۵۹ (مهندس رمضان زاده)

6.10.3 Write RUN Command

When F0-02 = 2, you can write running command via communication on host computer, such as forward run, reverse run, forward jog, reverse jog and stop of the AC drive.

Communication address and descriptions of running command are defined in the following table.

RUN Command Communication Address	RUN Command Description
2000H	1: Forward run
	2: Reverse run
	3: Forward jog
	4: Reverse jog
	5: Coast to stop
	6: Decelerate to stop
	7: Fault reset

Here takes CANlink protocol as an example to describe communication process of host computer to write running command to the AC drive.

Before writing the running command, set baud rate and local address. The settings of related parameters are as follows:

Function Parameter	Setting Description
Fd-00 (Baud rate)	Select the CANlink baud rate in thousands position of Fd-00. You must set the same baud rate in the master and slave. Otherwise, the communication will not be implemented.
Fd-02 (Local address)	The CANlink address range is 1 to 63.

Suppose that CANlink master address is 0x01 and AC drive address is 0x02 (settable, range: 1 to 63). The running command to be written is reverse jog. The communication address is 0x2000.

The format of the message sent by the master is as follows:

Message ID (Hex)	Data Length	Data (Hex)
0x11050201	4	00 04 20 00

The format of the response message returned by the slave is as follows:

Message ID (Hex)	Data Length	Data (Hex)
0x10050102	4	00 04 20 00

www.Farazcontrol.com واحد فروش: ۰۹۱۲۹۲۷۵۱۵۹ (مهندس رمضان زاده)

Sending message and response message are described as follows:

Sending Message			Response Message		
Message ID 11050201H	Arbitration sign	1000 (binary)	Message ID 11050102H	Arbitration sign	1000 (binary)
	Q&A sign	1 (binary)		Q&A sign	1 (binary)
	Command code	05H		Command code	05H
	Target address	02H		Target address	01H
	Source address	01H		Source address	02H
Data length		4 (decimal)	Data length		4 (decimal)
Write data high byte		00H	Write data high byte		00H
Write data low byte		04H	Write data low byte		04H
Write address high byte		20H	Write address high byte		20H
Write address low byte		00H	Write address low byte		00H

Note	To write other running commands via CANlink protocol, refer to *Sending CANlink frame* and *Returned CANlink frame* in the following tables to organize message.

Sending CANlink frame of write operation is as follows:

CAN	CANlink	Description
IDbit28–25	Arbitration sign	The arbitration sign of the command frame is 1000.
IDbit24	Q&A sign	Q&A sign: 1 is the question frame.
IDbit23–16	Command code	Write register command is 0x05.
IDbit15–8	Target address	CANlink target address
IDbit7–0	Source address	CANlink local address
DATA1	Data	Write data high byte
DATA2	Data	Write data low byte
DATA3	Data	Write address high byte
DATA4	Data	Write address low byte

Returned CANlink frame of write operation is as follows:

CAN	CANlink	Description
IDbit28–25	Arbitration sign	The arbitration sign of the command frame is 1000.
IDbit24	Q&A sign	Q&A sign: 0 is the answer frame.
IDbit23–16	Command code	Write register command is 0x05.
IDbit15–8	Target address	CANlink target address
IDbit7–0	Source address	CANlink local address
DATA1	Data	Write data high byte
DATA2	Data	Write data low byte
DATA3	Data	Write address high byte
DATA4	Data	Write address low byte

www.Farazcontrol.com واحد فروش: ۰۹۱۲۹۲۷۵۱۵۹ (مهندس رمضان زاده)

6.10.4 Write Frequency Reference

You can set frequency reference, torque limit, V/F separation voltage, PID reference and PID feedback via communication address 1000H. The data range is -10000 to 10000, corresponding to -100.00% to 100.00%.

For example, to set main frequency reference to 8000 by using Modbus protocol, first set F0-03 = 9 and send write command 01 06 10 00 1F 40 84 CA. In the command,

- 01H (settable): AC drive address
- 06H: write command
- 1000H: communication address of giving the frequency reference
- 1F40H: frequency reference (converted into decimal 10000)
- 84CAH: CRC check

Note	Range of frequency reference given via communication is -10000 to 10000, corresponding to -100.00% to 100.00%. -100.00% corresponds to negative maximum frequency, 0.00% corresponds to minimum frequency, and 100.00% corresponds the maximum frequency. Suppose that F0-10 = 50 Hz, if frequency reference in write command is 1F40H, converted to decimal 8000, frequency reference that is written is 50 x 80.00% = 40 Hz.

Sending Message		Response Message	
ADDR	01H	ADDR	01H
CMD	06H	CMD	06H
Parameter address high bits	10H	Parameter address high bits	10H
Parameter address low bits	00H	Parameter address low bits	00H
Data content high bits	1FH	Data content high bits	1FH
Data content low bits	40H	Data content low bits	40H
CRC high bits	84H	CRC high bits	84H
CRC low bits	CAH	CRC low bits	CAH

www.Farazcontrol.com واحد فروش: ۰۹۱۲۹۲۷۵۱۵۹ (مهندس رمضان زاده)

6.10.5 Control of Digital Output (DO, Relay, FMR)

If a digital output terminal is set for function 20: Communication setting, you can control digital output by using host computer.

The communication address and command of digital outputs are defined in the following table.

Related communication address and command are as follows:

Communication Address	Command Description
2001H	Bit0: DO1 output
	Bit1: DO2 output
	Bit2: Relay1 output
	Bit3: Relay2 output
	Bit4: FMR output
	Bit5: VDO1
	Bit6: VDO2
	Bit7: VDO3
	Bit8: VDO4
	Bit9: VDO5

6.10.6 Control of Analog and High-speed Pulse Output (AO, FMR)

When F5-06, F5-07 or F5-08 = 12, you can control analog and high-speed pulse output by using host computer.

The communication address and command of analog and high-speed pulse outputs are defined in the following table.

Related communication address and command are as follows:

Communication Address		Command Description
AO1	2002H	0 to 7FFF indicates 0% to 100%.
AO2	2003H	
FMP	2004H	

6.10.7 Parameter Initialization

You can initialize parameters via host computer by using this function. If FP-00 (user password) is set to a non-zero value, verify password on host computer.

Once password passes verification, host computer performs parameter initialization within 30s. The communication address of password verification is 1F00H. Directly write correct user password to this address to complete verification.

The communication address and parameter initialization command are defined in the following table.

Communication Address	Command Description
1F01H	1: Restore factory parameters
	2: Clear the records
	4: Restore the user backup parameters
	501: Back up the current user parameters

www.Farazcontrol.com واحد فروش: ۰۹۱۲۹۲۷۵۱۵۹ (مهندس رمضان زاده)

6.11 Auxiliary Function

6.11.1 Jog

Jog is used to test equipment. In jog running, F6-00 must be set to 0 (direct start) and F6-10 must be set to 0 (Decelerate to stop).

Function Code	Parameter Name	Setting Range	Default
F0-25	Acceleration/Deceleration time base frequency	0: Maximum frequency (F0-10) 1: Frequency reference 2: 100 Hz	0
F8-00	Jog frequency reference	0.00 Hz to maximum frequency	2.00 Hz
F8-01	Jog acceleration time	0.0s to 6500.0s	20.0s
F8-02	Jog deceleration time	0.0s to 6500.0s	20.0s

Jog acceleration time indicate time to accelerate from 0 Hz to F0-25.

Jog deceleration time indicate time to decelerate from F0-25 to 0 Hz.

Function Code	Parameter Name	Setting Range	Default
F8-27	Set highest priority to terminal JOG function	0: Disabled 1: Enabled	0

This function parameter determines whether to set the highest priority to terminal JOG function. If this function is enabled and any of F4-00 to F4-09 is set to 4 (forward jog) or 5 (reverse jog) becomes active, the AC drive enters jog running status immediately.

Figure 6-55 Jog running

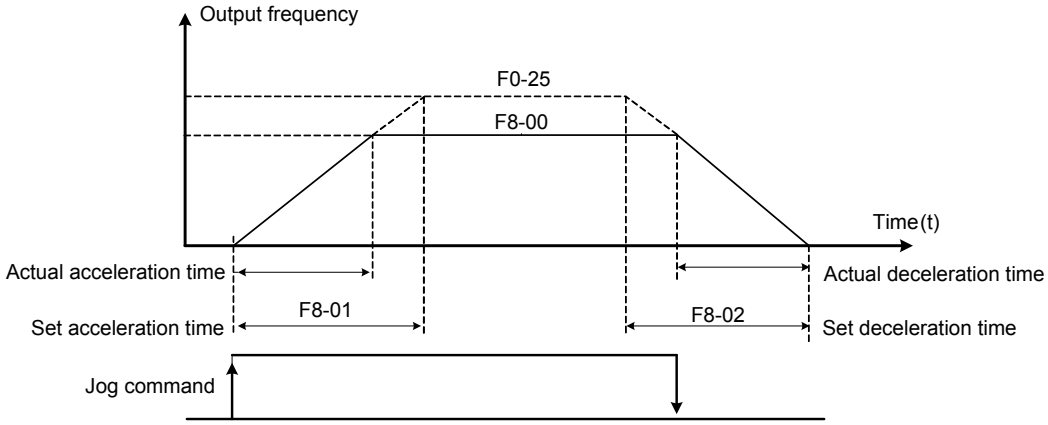

Follow the steps below to control the drive jog via the operation panel.

Steps	Forward jog	Reverse jog
1	Set F7-01 = 3 to allocate the MF.K key with forward jog.	Set F7-01 = 4 to allocate the MF.K key with reverse jog. Set F8-13 = 0 to allow reverse running.
2	Set F0-02 = 0 to select operation panel as command source.	Set F0-02 = 0 to select operation panel as command source.
3	Set F8-00, F8-01 and F8-02 properly.	Set F8-00, F8-01 and F8-02 properly.
4	In stop status, press down the MF.K key. The drive starts to jog in forward direction. After you release the MF.K key, the AC drive decelerates to stop.	In stop status, press down the MF.K key. The drive starts to jog in reverse direction. After you release the MF.K key, the AC drive decelerates to stop.

www.Farazcontrol.com واحد فروش: ۰۹۱۲۹۲۷۵۱۵۹ (مهندس رمضان زاده)

6.11.2 Jump Frequency, FWD/REV Switchover Dead-zone Time, Reverse Run Prohibited

■ Jump Frequency

The frequency jump function enables the AC drive to avoid mechanical resonance point of load. The drive can be set with two separate frequencies. If both are set to 0, the frequency jump function is disabled.

Figure 6-56 Jump frequency

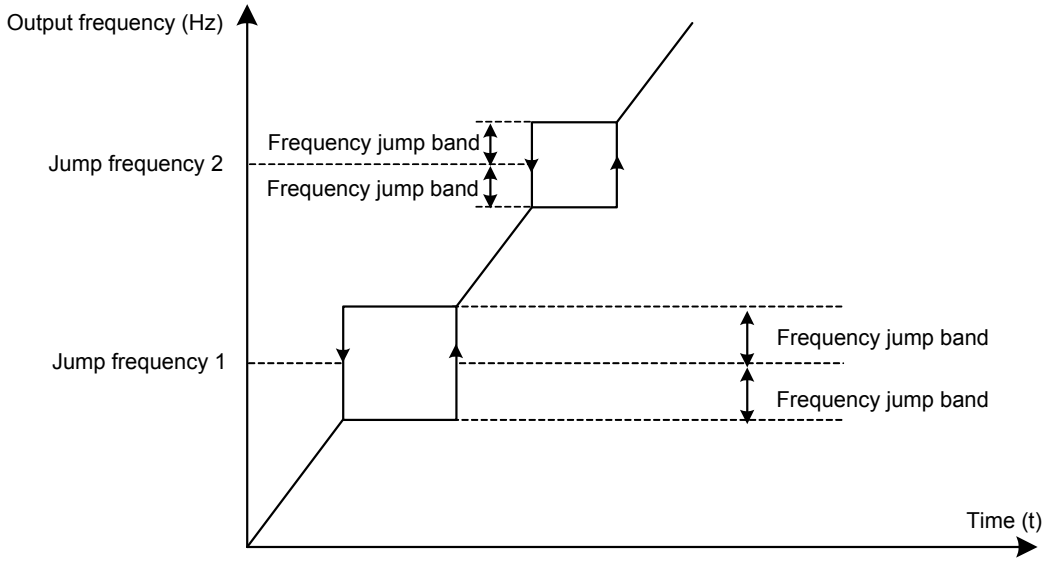

In the preceding figure, when running frequency accelerates to the value that is close to jump frequency during acceleration, the AC drive runs for a period at current frequency reference and then jumps over jump frequency. The jump width is twice of F8-11.

When running frequency decelerates to the value close jump frequency during deceleration, the AC drive runs for a period at current frequency reference and then jumps over jump frequency. The jump width is twice of F8-11.

Function Code	Parameter Name	Setting Range	Default
F8-09	Frequency jump 1	0.00 Hz to max. frequency	0.00 Hz
F8-10	Frequency jump 2	0.00 Hz to max. frequency	0.00 Hz
F8-11	Frequency jump band	0.00 Hz to max. frequency	0.00 Hz
F8-22	Jump frequency function	0: Disabled 1: Enabled	0

www.Farazcontrol.com (مهندس رمضان زاده) ۰۹۱۲۹۲۷۵۱۵۹ واحد فروش:

■ FWD/REV Switchover Dead-zone Time

Figure 6-57 Forward/Reverse run switchover dead-zone time

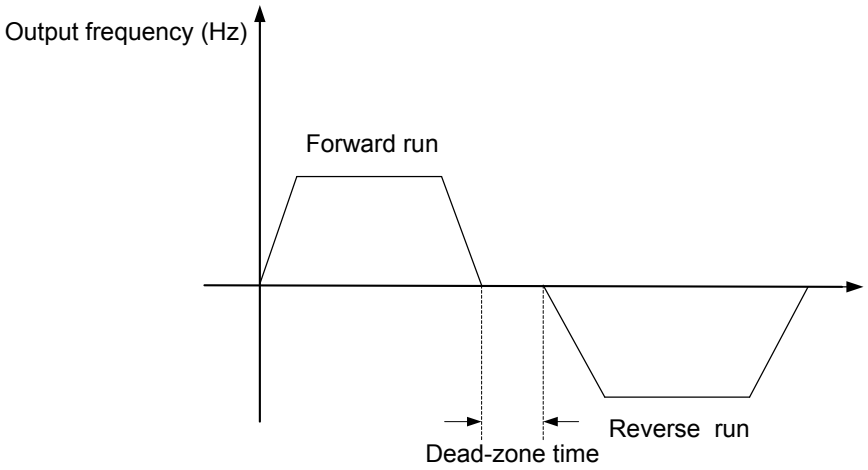

Function Code	Parameter Name	Setting Range	Default
F8-12	Forward/Reverse run switchover dead-zone time	0.0s to 3000.0s	0.0s

■ Reverse Run Prohibited

Figure 6-58 Control of reverse run

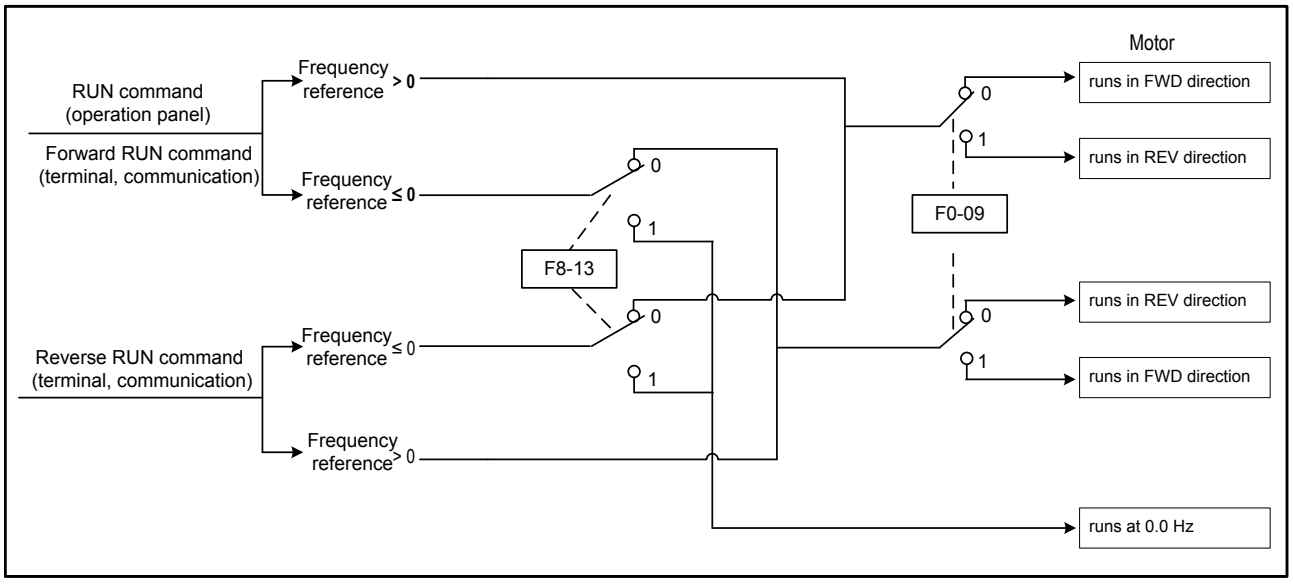

Function Code	Parameter Name	Setting Range	Default
F8-13	Reverse RUN selection	0: Enabled 1: Disabled	0
F0-09	Running direction	0: Run in the default direction (FWD/REV indicator off) 1: Run in the direction reverse to the default direction (FWD/REV indicator on)	0

Note	The original direction of motor will be resumed after parameter initialization. Do not use this function in applications where changing rotation direction of motor is prohibited after system commissioning is completed.

www.Farazcontrol.com واحد فروش: ۰۹۱۲۹۲۷۵۱۵۹ (مهندس رمضان زاده)

6.11.3 Frequency Detection (FDT)

This function sets detection values of output frequency and sets hysteresis level for the frequency detection function.

Figure 6-59 Frequency detection

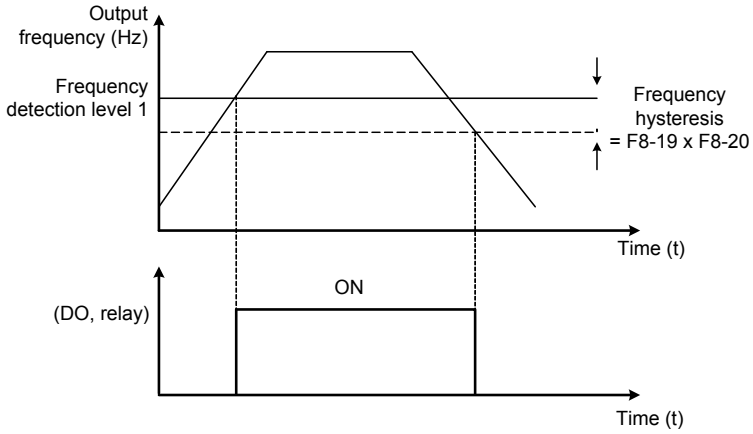

Function Code	Parameter Name	Setting Range	Default
F8-19	Frequency detection value 1	0.00 Hz to max. frequency	50.00 Hz
F8-20	Frequency detection hysteresis 1	0.0% to 100.0%	5.0%
F8-28	Frequency detection value 2	0.00 Hz to max. frequency	50.00 Hz
F8-29	Frequency detection hysteresis 2	0.0% to 100.0%	5.0%

F8-19: It sets detection value for digital output function 3. When running frequency exceeds the detection value, digital output terminal set for function 3 becomes on.

F8-20: It sets hysteresis level for the frequency detection function. It is a percentage of the frequency detection value (F8-19).

6.11.4 Frequency Reference Reached Detection Width

This function sets the detection width of the frequency reference.

Figure 6-60 Frequency reached detection width

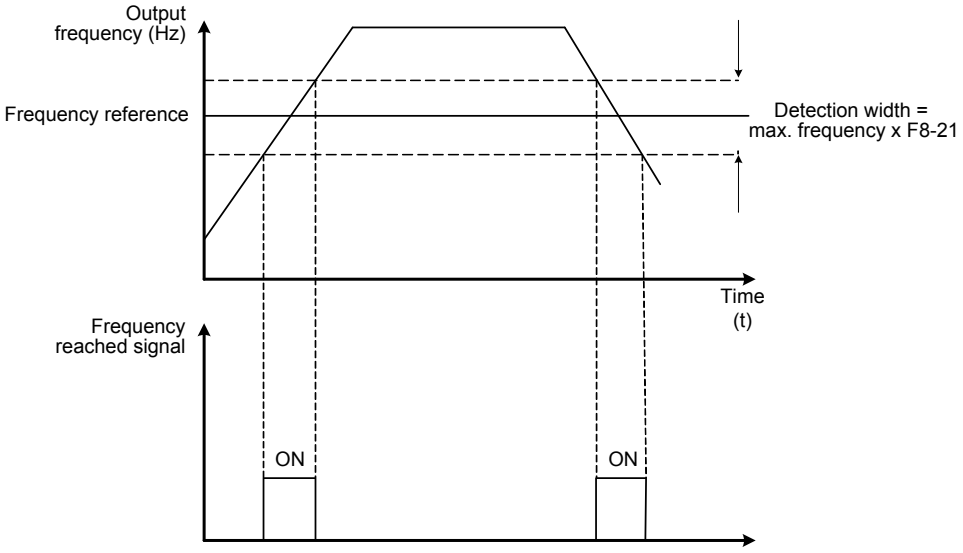

Function Code	Parameter Name	Setting Range	Default
F8-21	Detection width of target frequency reached	0.0% to 100.0%%	0.0%

www.Farazcontrol.com (مهندس رمضان زاده)۰۹۱۲۹۲۷۵۱۵۹ واحد فروش:

6.11.5 Acceleration/Deceleration Time Switchover

This function selects acceleration/deceleration time according to running frequency range during drive running. This function is active only when motor 1 is selected and acceleration/deceleration time is not switched over via external DI terminal.

Figure 6-61 Acceleration/Deceleration time switchover

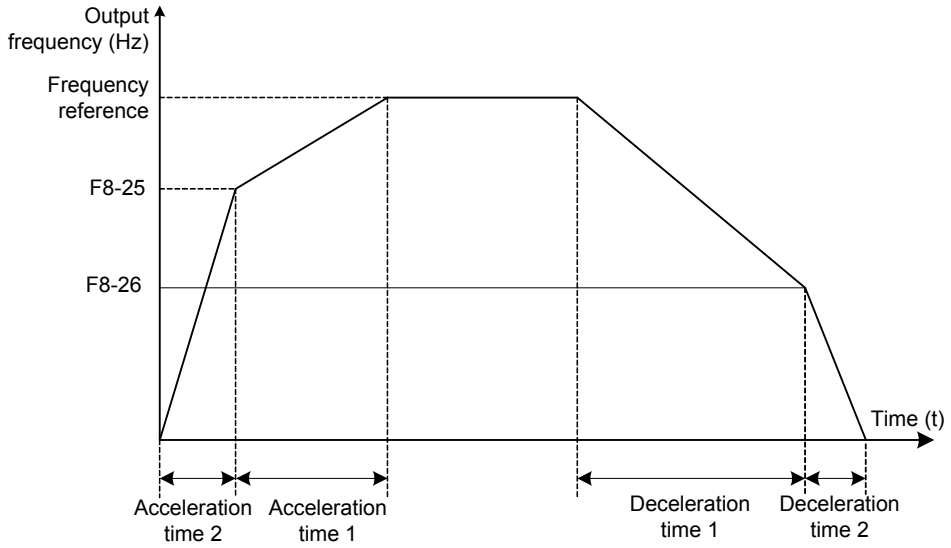

During acceleration, if the running frequency is below F8-25, acceleration time 2 is selected. If it is above F8-25, acceleration time 1 is selected.

During deceleration, if the running frequency is above F8-26, deceleration time 1 is selected. If it is below F8-26, deceleration time 2 is selected.

6

Function Code	Parameter Name	Setting Range	Default
F8-25	Switchover frequency of acceleration time 1 and acceleration time 2	0.00 Hz to max. frequency	0.00 Hz
F8-26	Switchover frequency of deceleration time 1 and deceleration time 2	0.00 to max. frequency	0.00 Hz

www.Farazcontrol.com واحد فروش: ۰۹۱۲۹۲۷۵۱۵۹ (مهندس رمضان زاده)

6.11.6 Frequency Reached Detection

This function sets the detection value and detection width of frequency reached.

Figure 6-62 Frequency reached detection

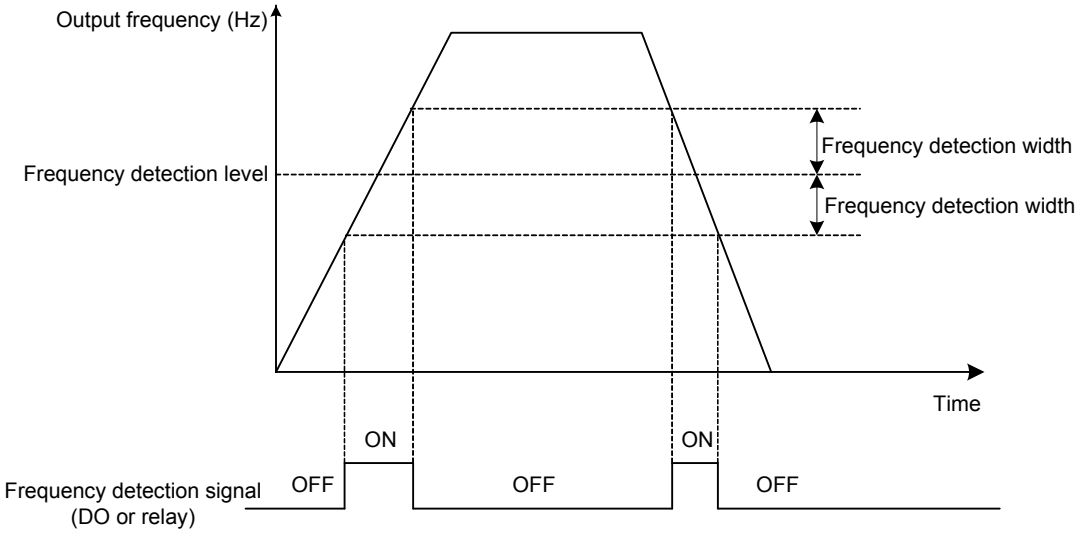

The drive provides two groups of frequency detection parameters for the digital output functions 26 and 27. When the output frequency is in the range of the detection width, the digital output terminal set for function 26 or 27 becomes on.

Function Code	Parameter Name	Setting Range	Default
F8-30	Detection of frequency 1	0.00 Hz to max. frequency	50.00 Hz
F8-31	Detection width of frequency 1	0.0% to 100.0% (max. frequency)	0.0%
F8-32	Detection of frequency 2	0.00 Hz to max. frequency	50.00 Hz
F8-33	Detection width of frequency 2	0.0% to 100.0% (max. frequency)	0.0%

6.11.7 Zero Current Detection

If output current of the AC drive is equal to or smaller than the value set in F8-34 and the duration exceeds the value set in F8-35, digital output terminal set for function 34 becomes on.

Figure 6-63 Zero current detection

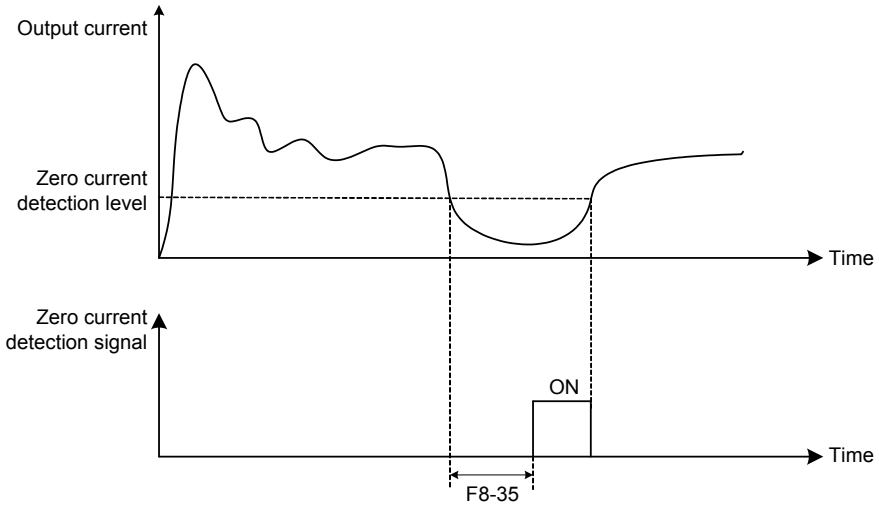

Function Code	Parameter Name	Setting Range	Default
F8-34	Zero current detection level	0.0% to 300.0% (rated motor current)	5.0%
F8-35	Zero current detection delay	0.00s to 600.00s	0.10s

www.Farazcontrol.com واحد فروش: ۰۹۱۲۹۲۷۵۱۵۹ (مهندس رمضان زاده)

6.11.8 Current Detection

The drive provides two groups of current detection level and width.

If output current of the AC drive reaches the width, digital output terminals set for functions 28 and 29 become on.

Figure 6-64 Current detection

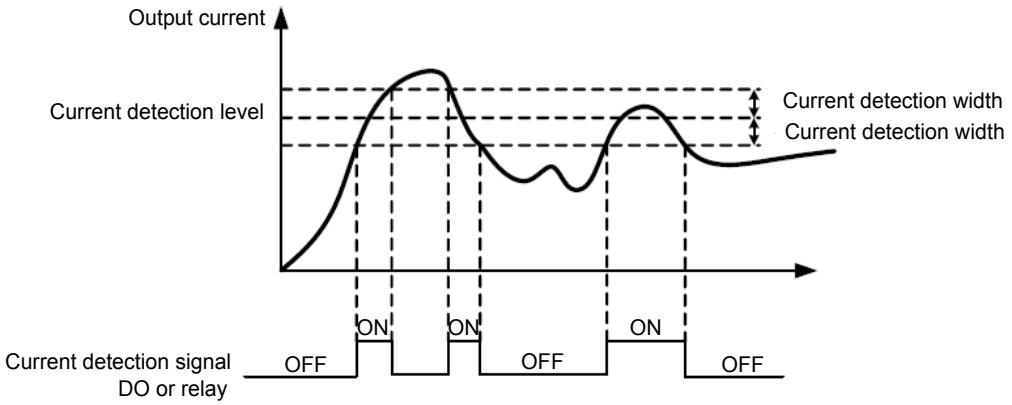

Function Code	Parameter Name	Setting Range	Default
F8-38	Detection level of current 1	0.0% to 300.0% (rated motor current)	100.0%
F8-39	Detection width of current 1	0.0% to 300.0% (rated motor current)	0.0%
F8-40	Detection level of current 2	0.0% to 300.0% (rated motor current)	100.0%
F8-41	Detection width of current 2	0.0% to 300.0% (rated motor current)	0.0%

6

6.11.9 Timing Function

Function Code	Parameter Name	Setting Range	Default
F8-42	Timing function	0: Disabled 1: Enabled	0
F8-43	Running time setting channel	0: Set by F8-44 1: AI1 2: AI2 3: AI3 (100% of analog input corresponds to the value of F8-44)	0
F8-44	Running time	0.0 to 6500.0 min	0.0

These function parameters define the timing function of the drive. Once it is enabled, the AC drive starts timing since start. When the set timing running time is reached, the AC drive stops automatically and digital output terminal set for function 30 becomes on.

The AC drive starts timing from 0 again for each start. You can view remaining timing running time in U0-20.

www.Farazcontrol.com واحد فروش: ۰۹۱۲۹۲۷۵۱۵۹ (مهندس رمضان زاده)

6.11.10 AI1 Input Voltage Upper/Lower Limit

Function Code	Parameter Name	Setting Range	Default
F8-45	AI1 input voltage lower limit	0.00 V to F8-46	3.10 V
F8-46	AI1 input voltage upper limit	F8-45 to 10.00 V	6.80 V

These two function parameters indicate whether AI1 input voltage is in the setting range. If AI1 input is larger than F8-46 or smaller than F8-45, digital output terminal set for function 31 becomes on.

6.11.11 IGBT Temperature

Function Code	Parameter Name	Setting Range	Default
F8-47	IGBT temperature threshold	0°C to 100°C	75°C

This function parameter sets IGBT temperature threshold. When heatsink temperature reaches the value set in F8-47, digital output terminal set for function 35 becomes on.

6.11.12 Cooling Fan

Function Code	Parameter Name	Setting Range	Default
F8-48	Cooling fan working mode	0: Working during drive running 1: Working continuously	0

This function parameter sets working mode of cooling fan.

- F8-48 = 0: Working during running

  The fan works during drive running. When the drive stops, the fan works if heatsink temperature is above 40°C and stops if heatsink temperature is below 40°C.

- F8-48 = 1: Working continuously

  The fan keeps working after power-on.

6.11.13 Hibernating and Wakeup

The hibernating and wakeup function is used in water supply application. Generally, set wakeup frequency equal to or higher than hibernating frequency. If they are set to 0, the function is disabled.

Figure 6-65 Hibernating and wakeup

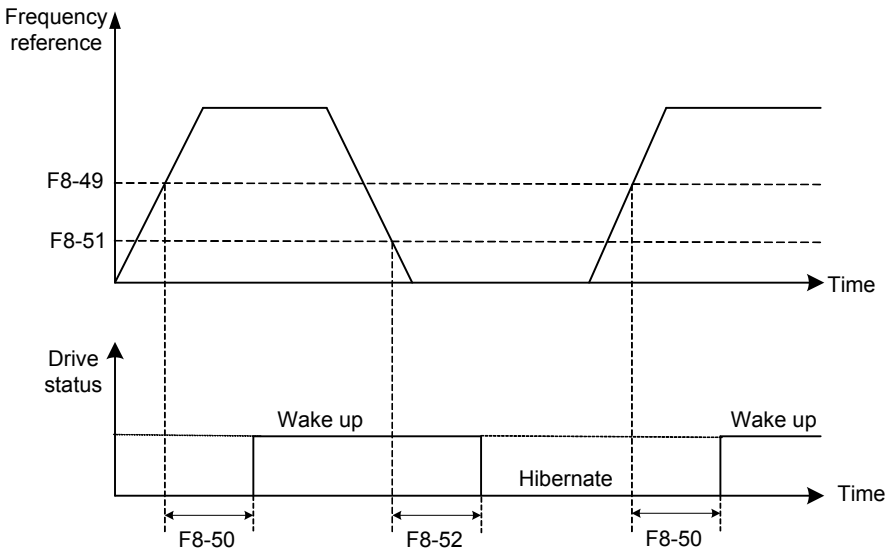

www.Farazcontrol.com واحد فروش: ۰۹۱۲۹۲۷۵۱۵۹ (مهندس رمضان زاده)

Function Code	Parameter Name	Setting Range	Default
F8-49	Wakeup frequency	Hibernating frequency (F8-51) to max. frequency (F0-10)	0.00 Hz
F8-50	Wakeup delay time	0.0s to 6500.0s	0.0s
F8-51	Hibernating frequency	0.00 Hz to wakeup frequency (F8-49)	0.00 Hz
F8-52	Hibernating delay time	0.0s to 6500.0s	0.0s

During drive running, when frequency reference is equal to or smaller than F8-51, the AC drive enters hibernating state after delay set in F8-52.

In hibernating state, when frequency reference is equal to or larger than F8-49, the AC drive wakes up after delay set in F8-50.

When frequency reference setting channel is PID reference, whether to perform PID operation in hibernating state is determined by FA-28 (Selection of PID operation at stop).

6.11.14 Running Time Threshold This Time

Function Code	Parameter Name	Setting Range	Default
F8-53	Running time threshold this time	0.0 to 6500.0 min	0.0 min

If running time this time reaches the value set in this parameter, digital output terminal set for function 40 becomes on, indicating that the running time this time is reached. It is effective only for drive running this time. The previous running time is not added.

6.11.15 Output Power correction

Function Code	Parameter Name	Setting Range	Default
F8-54	Output power correction coefficient	0.00% to 200.0%	100.0%

This function parameter sets output power correction coefficient. When output power (U0-05) is not equal to expected value, perform linear correction via this parameter.

www.Farazcontrol.com (مهندس رمضان زاده)۰۹۱۲۹۲۷۵۱۵۹ واحد فروش:

7. Interfaces and Communication

7.1 About Use of MD290 Terminals 202
7.2 Serial Communication 204
7.3 About Multi-functional Extension Interfaces 205
7.4 Definition of Communication Data Address 206
7.5 Modbus Communication Protocol 209

www.Farazcontrol.com واحد فروش: ۰۹۱۲۹۲۷۵۱۵۹ (مهندس رمضان زاده)

Chapter 7 Interfaces and Communication

7.1 About Use of MD290 Terminals

■ Use of DI Terminals

There are five digital inputs on control board, DI1 to DI5. There are five extra digital inputs on optional I/O extension board, DI6 to DI10,which are available to use if you have this option installed.

All digital input terminals on the drive are two-state. DI configuration is set by F4-38 (for DI1 to DI5) and F4-39 (for DI6 to DI10). Default value for these two parameters is 00000, which means all DI terminals use the following logic configuration:

- Logic 0 (terminal is inactive) is when DI terminal 24 V line is not shorted to COM.
- Logic 1 (terminal is active) is when DI terminal 24 V line is shorted to COM.

If necessary, you can change logic configuration for any of DI terminals by setting relevant bit in correct parameter.

Parameters F4-00 to F4-09 define which of the 50 available functions is allocated to each of the ten DI terminals.

Note	Only DI5 is allowed to receive high-speed pulse signals. If your application uses high-speed pulse counts, then you must use DI5 for this input.

■ Filter Time and Delay Functions

F4-10 sets a filter time on the DI signal to improve performance of the drive in conditions of strong electrical interference.

The drive also provides a signal delay function on digital inputs DI1 to DI3 to support some applications that require a delayed digital input. You can set the delay separately for each of the three DI terminals:

- Function code F4-35 controls the delay on DI1.
- Function code F4-36 controls the delay on DI2.
- Function code F4-37 controls the delay on DI3.

■ Use of DO Terminals

There are three digital output terminals on control board:

- FM is a transistor output capable of driving a 24 V DC low-voltage circuit.
- DO1 is a transistor output capable of driving a 24 V DC low-voltage circuit.
- TA/TB/TC is a relay output that can drive a 250 V AC control circuit.

There are two additional digital outputs on the optional I/O extension board, which are available to use if you have this option installed.

- DO2 s a transistor output capable of driving a 24 V DC low-voltage circuit.
- PA/PB/PC is a relay output that can drive a 250 V AC control circuit.

Function codes F5-01 to F5-05 define how DO terminals indicate the running status and alarm information for the AC drive. There are 40 functions available to use for these function codes.

www.Farazcontrol.com واحد فروش: ۰۹۱۲۹۲۷۵۱۵۹ (مهندس رمضان زاده)

Terminal	Corresponding Function Code	Output Feature Description
FM-CME	F5-06 when F5-00 = 0	Transistor Able to output high-speed pulses 10 Hz to 100 KHz Drive capacity: 24 VDC, 50 mA
	F5-01 when F5-00 = 1	Transistor Drive capacity: 24 VDC, 50 mA
TA-TB-TC	F5-02	Relay Drive capacity: 50 VAC, 0.2 A/30 VDC, 1 A
PA-PB-PC	F5-03	Extension card, relay; drive capacity: 50 VAC, 0.2 A/30 VDC, 1 A
DO1-CME	F5-04	Transistor Drive capacity: 24 VDC, 50 mA
DO2-CME	F5-05	Extension card transistor Drive capacity: 24 VDC, 50 mA

When F5-00 = 0, FM terminal is high-speed pulse output. Frequency of pulses on this DO terminal indicates the value of internal running parameters. Higher values of internal running parameters produce higher pulse frequencies. Value 100% corresponds to a pulse frequency of 100 kHz.

■ Use of AI Terminals

The drive supports a maximum of three analog input terminals. Of these, AI1 and AI2 are on the control board, and AI3 is on the optional extension card.

Terminal	Input Signal Characteristic
AI1-GND	It receives the signal of 0 to 10 VDC.
AI2-GND	If J9 jumps to the "V" position, AI receives voltage signal of 0 to 10 VDC. If J9 jumps to the "I" position, AI receives current signal of 0 to 20 mA.
AI3-GND	It receives signal of -10 to 10 VDC.

Analog inputs allow an external voltage or current signal to set frequency reference, torque reference, voltage setting at V/F separation, and PID reference and feedback. F4-13 to F4-27 define relationship between analog input voltage or current signals and actual controlled setting or feedback.

Sampling of analog values on AI terminals is possible by reading function codes:

- U0-09 shows value of AI1.
- U0-10 shows value of AI2.
- U0-11 shows value of AI3.

www.Farazcontrol.com واحد فروش: ۰۹۱۲۹۲۷۵۱۵۹ (مهندس رمضان زاده)

■ Use of AO Terminals

The drive supports a maximum of two analog output terminals. AO1 is on the control board and AO2 is on the optional extension card.

Terminal	Input Signal Characteristic
AO1-GND	If J5 jumps to the "V" position, AO outputs voltage signal of 0 to 10 VDC. If J5 jumps to the "I" position, AO outputs current signal of 0 to 20 mA.
AO2-GND	It outputs voltage signal of 0 to 10 VDC.

F5-07 and F5-08 define how AO terminals indicate the drive internal running parameters in analog mode.

It is possible to change sense, offset and scaling of parameters on analog outputs. This is by correcting outputs according to the following formula:

Y = kX + b,

Where:

- Y = output parameter after correction.
- X = output parameter before correction.
- k = scaling factor set by F5-11.
- b = offset set by F5-10.

Note that scaling and offset values can be positive or negative.

7.2 Serial Communication

You must install relevant extension card in the drive and set F0-28 correctly before you can use one of available serial communication protocols. The available serial communication protocols are:

- RS485
- PROFIBUS-DP
- CANopen
- CANlink

Note that function code F0-28 has correct value for the CANlink communication protocol by default.

See *7.5.5 Group Fd Communication Parameter Description* for instructions to set hardware communication parameters for the relevant communication protocol. You must set identical communication rate and data format for the drive and for the host computer, otherwise, communications will fail.

The drive supports Modbus-RTU slave communication protocol, which has the following functions:

- View and modify the parameters.
- View various running status parameters.
- Send Run command and frequency reference to the AC Drive from host computer.

The drive arranges parameters, running status parameters and run commands by using register parameter address mode. Host computer defines protocol of communication data interaction.

www.Farazcontrol.com (مهندس رمضان زاده)۰۹۱۲۹۲۷۵۱۵۹ :واحد فروش

7.3 About Multi-functional Extension Interfaces

The following table lists extension cards that are available for use with the drive.

Name	Model	Function	Remark
I/O extension card 1	MD38IO1	Provides the following: ● Five extra DI terminals. ● Analog voltage input AI3 (with isolation) for connection to PT100 or PT1000. ● A relay output. ● A digital output. ● An analog output.	Available for all models.
I/O extension card 2	MD38IO2	Provides three extra DI terminals.	Available for all models.
Modbus communication card	MD38TX1	RS485 communication adapter with isolation	Available for all models.
CANlink communication card	MD38CAN1	CANlink communication adapter	Available for all models.
CANopen communication card	MD38CAN2	CANopen communication adapter	Available for all models.
Profibus-DP communication card	MD38DP2	Profibus-DP communication card	Available for all models.
User programmable card	MD38PC1	User-programmable extension card, completely compatible with the Inovance H1U series PLC.	Available for all models.

Note	For details of these extension cards, see *8.4 Extension Cards*.

www.Farazcontrol.com واحد فروش: ۰۹۱۲۹۲۷۵۱۵۹ (مهندس رمضان زاده)

7.4 Definition of Communication Data Address

The drive supports four communication protocols (Modbus-RTU, CANopen, CANlink, and PROFIBUS-DP). The user programmable card and point-to-point communication are derivation of CANlink protocol. Host computer can implement control such as monitoring and parameter viewing and modification on the AC drive through their protocols.

The drive's communication data is classified into parameter data and non-parameter data. The non-parameter data includes running commands, running status, running parameters and alarm information.

7.4.1 Parameter Data

The parameter data provides important parameters of the AC drive. The parameter data is described as below:

Parameter data	Group F (read-write)	F0, F1, F2, F3, F4, F5, F6, F7, F8, F9, FA, FB, FC, FD, FE, FF
	Group A (read-write)	A0, A1, A2, A3, A4, A5, A6, A7, A8, A9, AA, AB, AC, AD, AE, AF

Communication addresses of parameter data are defined as follows:

1. When parameter data is read by means of communication

   For groups F0 to FF and A0 to AF, the high 16 bits of the communication address indicate the group number and the low 16 bits indicate the parameter number in the group.

   Example:

   Communication address of F0-16 is F010H, where F0H represents group F0 and 10H is the hexadecimal data format of serial number 16 in the group.

   Communication address of AC-08 is AC08H, where ACH represents group AC and 08H is the hexadecimal data format of serial number 8 in the group.

2. When parameter data is written by means of communication

   For groups F0 to FF, whether the high 16 bits in communication address are 00 to 0F or F0 to FF is decided by whether the high 16 bits are written to EEPROM. The low 16 bits indicate parameter number in the group.

   Example:

   F0-16: If it need not be written to EEPROM, communication address is 0010H. If it needs to be written to EEPROM, communication address is F010H.

   For groups A0 to AF, whether the high 16 bits in communication address are 40 to 4F or A0 to AF is decided by whether the high 16 bits are written to EEPROM. The low 16 bits indicate parameter number in the group.

   AC-08: If it need not be written to EEPROM, communication address is 4C08H. If it needs to be written to EEPROM, communication address is AC08H.

www.Farazcontrol.com واحد فروش: ۰۹۱۲۹۲۷۵۱۵۹ (مهندس رمضان زاده)

7.4.2 Non-Parameter Data

Non-parameter data	Status data (read-only)	Group U (monitoring parameters), AC drive fault information and AC drive running status
	Control parameters (write-only)	Control commands, communication setting values, DO control, AO1 control, AO2 control, high-speed pulse (FMP) output control and parameter initialization

■ Status Data

Status data includes group U (monitoring parameters), AC drive fault description and AC drive running status.

1. Group U (monitoring parameters)

   The high 16 bits in communication address of U0 to UF is 70 to 7F and the low 16 bits indicate the function code number in the group. For example, the communication address of U0-11 is 700BH.

2. AC drive fault description

   When fault description is read via communication, the communication address is 8000H. You can obtain current fault code of the AC drive by reading the address.

3. AC drive running status

   When the drive running status is read via communication, the communication address is 3000H. You can obtain current running status information of the AC drive by reading the address. The running status is defined in the following table.

Communication Address of AC Drive's Running Status	Status Definition
3000H	1: Forward run
	2: Reverse run
	3: Stop

■ Control Parameters

The control parameters include control command, communication setting values, DO control, AO1 control, AO2 control, high-speed pulse (FMP) output control and parameter initialization.

- Control commands

  When F0-02 (command source selection) is set to 2 (serial comms.), you can implement control such as start/stop of the AC drive by using communication address. The control commands are defined in the following table.

Communication Address of AC Drive's Running Status	Status Definition
2000H	1: Forward run
	2: Reverse run
	3: Forward jog
	4: Reverse jog
	5: Coast to stop
	6: Decelerate to stop
	7: Fault reset

www.Farazcontrol.com واحد فروش: ۰۹۱۲۹۲۷۵۱۵۹ (مهندس رمضان زاده)

- Communication reference

  Communication setting values include data set via communication such as frequency reference, torque limit, V/F separation voltage, PID reference and PID feedback. Communication address is 1000H. The range is -10000−10000 and corresponding value range is -100.00% to 100.00%.

- DO control

  When a DO terminal is set for function 20 (Communication setting), host computer can implement control on DO terminals of the drive through communication address 2001H. Control on DO terminals of the drive is defined in the following table.

Communication Address of Drive Running Status	Status Definition
2001H	BIT0: DO1 output control
	BIT1: DO2 output control
	BIT2: Relay1 output control
	BIT3: Relay2 output control
	BIT4: FMR output control
	BIT5: VDO1
	BIT6: VDO2
	BIT7: VDO3
	BIT8: VDO4
	BIT9: VDO5

- AO1 control, AO2 control, high-speed pulse (FMP) output control

  When AO1, AO2 and FMP are set to function 12 (Communication setting), host computer can implement control on AO and high-speed pulse outputs by means of communication addresses. The definition is provided in the following table.

Communication Address of AO1, AO2 and FMP Output		Command Definition
AO1	2002H	0 to 7FFF indicates 0% to 100%
AO2	2003H	
FMP	2004H	

- Parameter initialization

  This function is required when you need to perform parameter initialization on the drive by using host computer.

  If FP-00 (User password) is set to a non-zero value, pass password verification first. Host computer performs parameter initialization within 30s after password verification is successful.

  Communication address of password verification via communication is 1F00H. Directly write correct user password to this address to perform password verification.

  Communication address of parameter initialization by means of communication is 1F01H, defined in the following table.

Communication Address of Parameter Initialization	Command Definition
1F01H	1: Restore default settings
	2: Clear records
	4: Restore user backup parameters
	501: Back up current user parameters

www.Farazcontrol.com واحد فروش: ۰۹۱۲۹۲۷۵۱۵۹ (مهندس رمضان زاده)

7.5 Modbus Communication Protocol

The drive provides RS485 communication interface and supports Modbus-RTU communication protocol so that the user can implement centralized control, such as setting running commands and function codes, and reading running status and fault information of the AC drive, by using a PC or PLC.

This protocol defines content and format of transmitted messages during serial communication, including master polling (or broadcasting) format and master coding method (function code for the action, transmission data, and error check). The slave uses the same structure in response, including action confirmation, data returning and error check. If an error occurs when the slave receives a message, or the slave cannot complete the action required by the master, the slave returns a fault message as a response to the master.

7.5.1 Application

The AC drive is connected to a "single-master multi-slave" PC/PLC control network with RS485 bus.

7.5.2 Bus Structure

- Interface mode

  The RS485 extension card MD38TX1 must be inserted into the AC drive.

- Topological structure

  The system consists of a single master and multiple slaves. In the network, each communication device has a unique slave address. A device is the master (can be a PC, a PLC or an HMI) and initiates communication to perform parameter read or write operations on slaves. The other devices (slaves) provide data to respond to query or operations from the master. At the same moment, either the master or the slave transmits data and the other can only receives data.

  The address range of the slaves is 1 to 247, and 0 is broadcast address. A slave address must be unique in the network.

- Transmission mode

  The asynchronous serial and half-duplex transmission mode is used. During asynchronous serial communication, data is sent frame by frame in the form of message. In Modbus-RTU protocol, an interval of at least 3.5-byte time marks the end of the previous message. A new message starts to be sent after this interval.

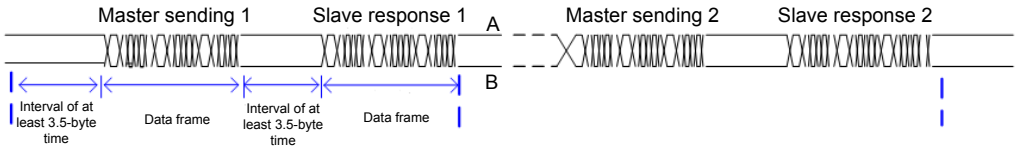

  The communication protocol used by the drive is the Modbus-RTU slave communication protocol, which allows the drive to provide data to respond to "query/command" from the master or execute the action according to "query/command" from the master.

  The master can be a PC, an industrial device, or a PLC. The master can communicate with a single slave or send broadcast messages to all slaves. When the master communicates with a single slave, the slave needs to return a message (response) to "query/command" from the master. For a broadcast message sent by the master, the slaves need not return a response.

www.Farazcontrol.com واحد فروش: ۰۹۱۲۹۲۷۵۱۵۹ (مهندس رمضان زاده)

7.5.3 Data Format

The drive supports reading and writing of word-type parameters only. Reading command is 0x03 and writing command is 0x06. It does not support reading and writing of bytes or bits.

The Modbu-RTU protocol communication data format of the drive is as follows:

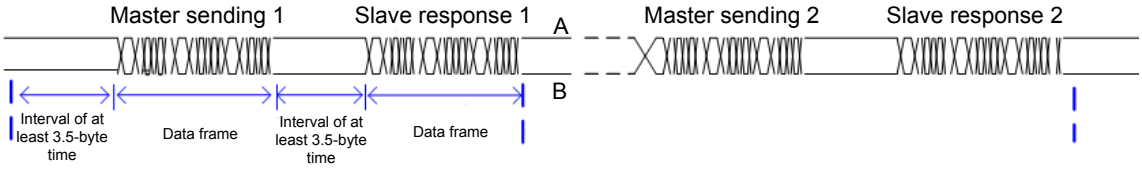

In theory, host computer can read several consecutive parameters (n can reach up to 12) but the last parameter it reads must not jump to the next parameter group. Otherwise, an error occurs on response.

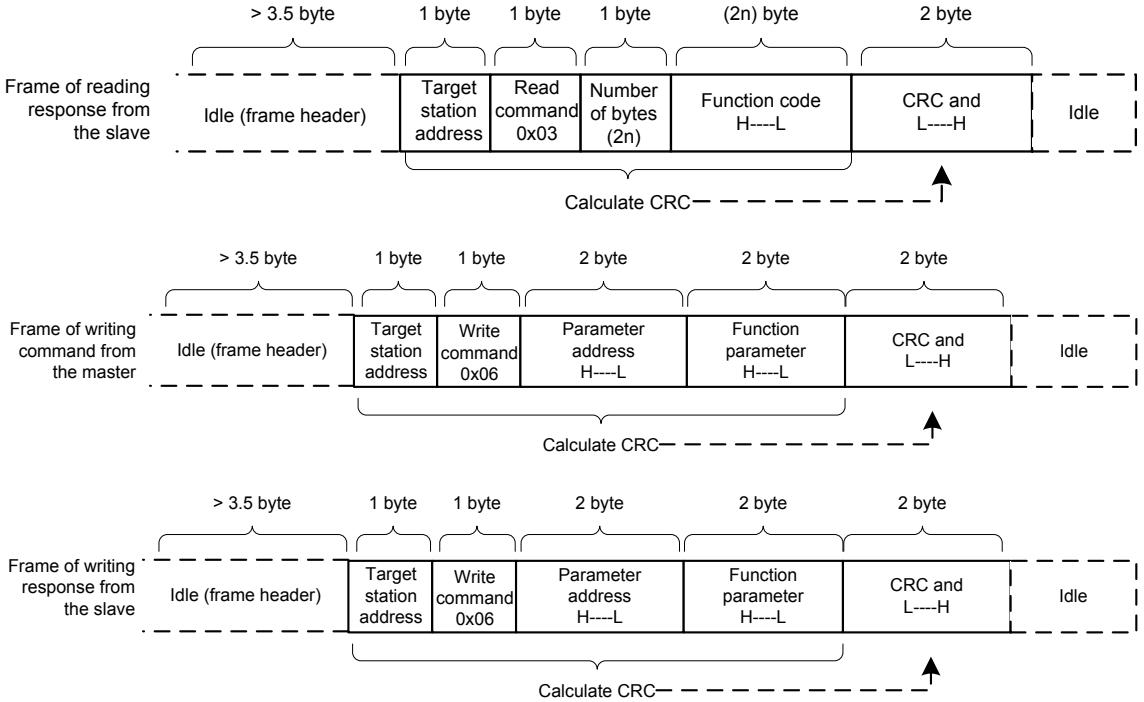

If the slave detects a communication frame error or reading/writing failure is caused by other reasons, an error frame will be returned as follows:

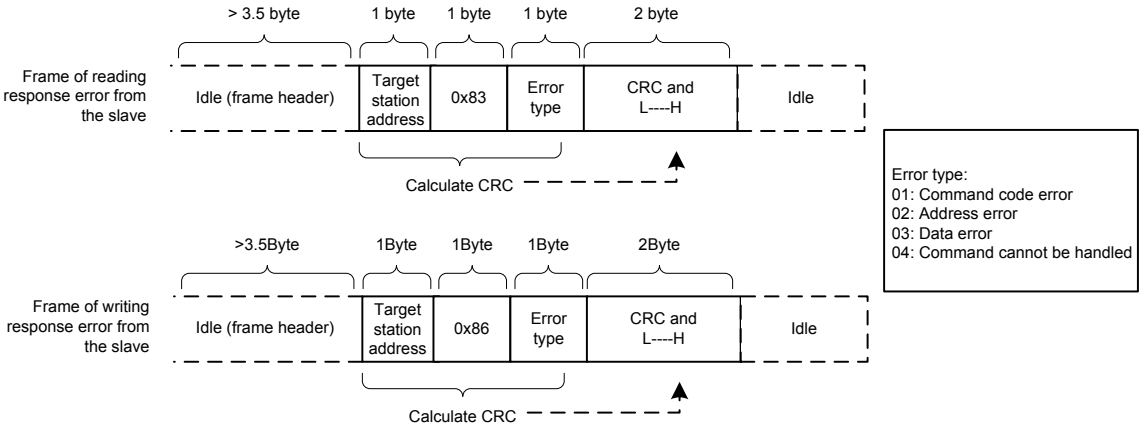

www.Farazcontrol.com (مهندس رمضان زاده) ۰۹۱۲۹۲۷۵۱۵۹ واحد فروش:

The frame format is described in the following table.

Frame header (START)	Greater than the 3.5-byte transmission idle time
Slave address (ADR)	Communication address : 1 to 247 0: Broadcast address
Command code (CMD)	03:Read slave parameters 06: Write slave parameters
Function code address (H)	It is the internal parameter address of the AC drive, expressed in hexadecimal format. The parameters include functional parameters and non-functional parameters (running status and running command). During transmission, low-order bytes follow the high-order bytes.
Function code address (L)	
Number of function codes (H)	It is the number of function codes read by this frame. If it is 1, it indicates that one function code is read. During transmission, low bytes follow high bytes. In the present protocol, only one function code is read once, and this field is unavailable.
Number of function codes (L)	
Data (H)	It is the response data or data to be written. During transmission, low-order bytes follow the high-order bytes.
Data (L)	
CRC CHK high bytes	It is the detection value (CRC16 verification value). During transmission, low-order bytes follow the high-order bytes.
CRC CHK low bytes	
END	It is 3.5-byte transmission time.

www.Farazcontrol.com واحد فروش: ۰۹۱۲۹۲۷۵۱۵۹ (مهندس رمضان زاده)

■ CRC Check

In Modbus-RTU mode, a message includes a CRC-based error-check field. The CRC field checks content of entire message. The CRC field is two bytes, containing a 16-bit binary value. The CRC field is calculated by transmitting device, and then added to message. The receiving device recalculates a CRC value after receiving message, and compares the calculated value with the CRC value in the received CRC field.

The CRC is first stored to 0xFFFF. Then a procedure is invoked to process the successive 8-bit byte in the message and the value in the register. Only the eight bits in each character are used for the CRC. The start bit, stop bit and the parity bit do not apply to the CRC.

During generation of the CRC, each eight-bit character is in exclusive-OR (XOR) with the content in the register. Then the result is shifted in the direction of the least significant bit (LSB), with a zero filled into the most significant bit (MSB) position. The LSB is extracted and examined. If the LSB was a 1, the register then performs XOR with a preset value. If the LSB was a 0, no XOR is performed. This process is repeated until eight shifts have been performed. After the last (eighth) shift, the next eight-bit byte is in XOR with the register's current value, and the process repeats for eight more shifts as described above. The final value of the register, after all the bytes of the message have been applied, is the CRC value.

The CRC is added to the message from the low-order byte followed by the high-order byte. The CRC simple function is as follows:

```
unsigned int crc_chk_value（unsigned char *data_value,unsigned char length）
{
unsigned int crc_value=0xFFFF;
                    int i;
        while（length--）..
    {
                    crc_value^=*data_value++;
                    for□i=0;i<8;i++□
            {
                    ..      if□crc_value&0x0001□
                            {
                    ..              crc_value=□crc_value>>1□^0xa001;
                    ..      }
                    ..              else
                            {
                    ..              crc_value=crc_value>>1;
                            }
                    .}
                   }
                    return□crc_value□;
}
```


www.Farazcontrol.com واحد فروش: ۰۹۱۲۹۲۷۵۱۵۹ (مهندس رمضان زاده)

7.5.4 Definition of Communication Parameter Addresses

■ Read and Written Parameters

Function parameters can be read and written (except those which cannot be changed because they are only for the factory use or for monitoring).

Parameter group No. and parameter identifying No. are used to express parameter address.

- High-order bytes: F0 to FF (groups F), A0 to AF (groups A), 70 to 7F (group U)
- Low-order bytes: 00 to FF

For example, to read parameter F3-12, communication address of F3-12 is expressed as 0xF30C.

Note	• Group FF: They are factory parameters. The parameters cannot be read or changed. • Group U: These parameters can only be read.

Some parameters cannot be modified when the AC drive is running. Some parameter cannot be modified regardless of status of the AC drive. In addition, pay attention to setting range, unit and description of parameters when modifying them.

Parameter Group	Visited Address	Parameter Address in RAM
F0 to FE	0xF000 to 0xFEFF	0x0000 to 0x0EFF
A0 to AC	0xA000 to 0xACFF	0x4000 to 0x4CFF
U0	0x7000 to 0x70FF	-

Frequent storage to the EEPROM reduces its service life. Therefore, in communication mode, users can change values of certain parameters in RAM rather than storing the setting.

- For groups F parameters, users only need to change high order F of the function code address to 0.
- For groups A parameters, users only need to change high order A of the function code address to 4.

The function code addresses are expressed as follows:

- High-order bytes: 00 to 0F (groups F), 40 to 4F (groups A)
- Low-order bytes: 00 to FF

For example, if function code F3-12 is not stored into EEPROM, the address is expressed as 030C.

It is an invalid address when being read. Users can also use command code 07H to implement this function.

www.Farazcontrol.com واحد فروش: ۰۹۱۲۹۲۷۵۱۵۹ (مهندس رمضان زاده)

■ Stop/RUN Parameters

Parameter Address	Description	Parameter Address	Description
1000	Communication setting value (Decimal): -10000 to 10000	1010	PID reference
1001	Running frequency	1011	PID feedback
1002	Bus voltage	1012	PLC process
1003	Output voltage	1013	Pulse input frequency, unit: 0.01 kHz
1004	Output current	1014	Feedback speed, unit 0.1Hz
1005	Output power	1015	Remaining running time
1006	Output torque	1016	AI1 voltage before correction
1007	Running speed	1017	AI2 voltage before correction
1008	DI input indication	1018	AI3 voltage before correction
1009	DO output indication	1019	Linear speed
100A	AI1 voltage	101A	Current power-on time
100B	AI2 voltage	101B	Current running time
100C	AI3 voltage	101C	Pulse input frequency, unit 1Hz
100D	Counting value input	101D	Communication reference
100E	Length value input	101E	Actual feedback speed
100F	Load speed	101F	Main frequency reference display
-	-	1020	Auxiliary frequency reference display

Note	• Communication setting value indicates percentage: 10000 corresponds to 100.00%, and -10000 corresponds to -100.00%. • With regard to frequency, communication reference is a percentage of F0-10 (maximum frequency).

Control command input to AC drive (write-only):

Command Word Address	Command Word Function
2000H	0001: Forward run
	0002: Reverse run
	0003: Forward jog
	0004: Reverse jog
	0005: Coast to stop
	0006: Decelerate to stop
	0007: Fault reset

www.Farazcontrol.com واحد فروش: ۰۹۱۲۹۲۷۵۱۵۹ (مهندس رمضان زاده)

Read AC drive state (read-only):

Command Word Address	Command Word Function
3000H	0001: Forward RUN
	0002: Reverse RUN
	0003: Stop

Parameter lock password check

If "8888H" is returned, it indicates that password check is passed.

Password Address	Password Content
1F00H	*****

DO terminal control (write-only)

Command Address	Command Content
2001H	BIT0: DO1 control BIT1: DO2 control BIT2: RELAY1 control BIT3: RELAY2 control BIT4: FMR control BIT5: VDO1 BIT6: VDO2 BIT7: VDO3 BIT8: VDO4 BIT9: VDO5

AO1 control (write-only)

Command Address	Command Content
2002H	0 to 7FFF indicates 0% to 100%.

AO2 control (write-only)

Command Address	Command Content
2003H	0 to 7FFF indicates 0% to 100%.

Pulse output control (write-only)

Command Address	Command Content
2004H	0 to 7FFF indicates 0% to 100%.

www.Farazcontrol.com واحد فروش: ۰۹۱۲۹۲۷۵۱۵۹ (مهندس رمضان زاده)

AC drive fault description

AC Drive Fault Address	AC Drive Fault Information	
8000	0000: No fault 0001: Reserved 0002 Overcurrent during acceleration 0003: Overcurrent during deceleration 0004: Overcurrent at constant speed 0005: Overvoltage during acceleration 0006: Overvoltage during deceleration 0007: Overvoltage at constant speed 0008: Buffer resistor overload 0009: Undervoltage 000A: AC drive overload 000B: Motor overload 000C: Power input phase loss 000D: Power output phase loss 000E: IGBT overheat 000F: External fault 0010: Communication fault 0011: Contactor fault 0012: Current detection fault 0013: Motor auto-tuning fault 0014: Encoder/PG card fault	0015: Parameter read and write fault 0016: AC drive hardware fault 0017: Motor short circuited to ground 0018: Reserved 0019: Reserved 001A: Accumulative running time reached 001B: User-defined fault 1 001C: User-defined fault 2 001D: Accumulative power-on time reached 001E: Load lost 001F: PID feedback lost during running 0028: Fast current limit timeout 0029: Motor switchover error during running 002A: Too large speed deviation 002B: Motor over-speed 002D: Motor overheat 005A: Incorrect setting of PPR of the encoder 005B: Not connecting the encoder 005C: Initial position error 005E: Speed feedback error

7

7.5.5 Group Fd Communication Parameter Description

Function Code	Parameter Name	Setting Range	Default
Fd-00	Baud rate	Units position (Modubs) 0: 300 bps 1: 600 bps 2: 1200 bps 3: 2400 bps 4: 4800 bps 5: 9600 bps 6: 19200 bps 7: 38400 bps 8: 57600 bps 9: 115200 bps	5005

www.Farazcontrol.com واحد فروش: ۰۹۱۲۹۲۷۵۱۵۹ (مهندس رمضان زاده)

This parameter is used to set transmission speed between host computer and AC drive.

Note that baud rate of host computer must be the same as that of AC drive. Otherwise, communication shall fail. The higher baud rate is, the faster communication will be.

Function Code	Parameter Name	Setting Range	Default
Fd-01	Data format	0: No check <8,N,2> 1: Even parity check <8,E,1> 2: Odd parity check <8,O,1> 3: No check, data format <8,N,1>	0

Note that data format of host computer must be the same as that of AC drive. Otherwise, communication shall fail.

Function Code	Parameter Name	Setting Range	Default
Fd-02	Local address	1 to 249 0: Broadcast address	1

This parameter is used to set address of AC drive. This address is unique (except broadcast address), which is basis for point-to-point communication between host computer and AC drive.

When local address is set to 0 (that is, broadcast address), AC drive can only receive and execute broadcast commands of host computer, but will not respond to host computer.

Function Code	Parameter Name	Setting Range	Default
Fd-03	Response delay	0 to 20 ms	2 ms

This parameter sets interval between AC drive completing receiving data and AC drive sending data to host computer. If response delay is shorter than system processing time, system processing time shall prevail. If response delay is longer than system processing time, system sends data to host computer only after response delay is up.

Function Code	Parameter Name	Setting Range	Default
Fd-04	Communication timeout	0.0s to 60.0s	0.0s

When AC drive does not receive communication signal within time set in this parameter, it detects communication timeout fault (Err16).

When this parameter is set to 0.0s, system does not detect communication timeout.

Generally, this parameter is set to 0.0s. In applications with continuous communication, you can use this parameter to monitor communication status.

Function Code	Parameter Name	Setting Range	Default
Fd-05	Communication protocol	0: Non-standard Modbus protocol 1: Standard Modbus protocol	0

Fd-05 = 1: Standard Modbus protocol

Fd-05 = 0: For read command, the slave returns an additional byte.

Function Code	Parameter Name	Setting Range	Default
Fd-06	Current resolution read by communication	0: 0.01 A 1: 0.1 A	0

This parameter is used to set unit of output current read by communication.

www.Farazcontrol.com واحد فروش: ۰۹۱۲۹۲۷۵۱۵۹ (مهندس رمضان زاده)

www.Farazcontrol.com واحد فروش: ۰۹۱۲۹۲۷۵۱۵۹ (مهندس رمضان زاده)

8. Peripherals and Options

8.1 MCCB, Fuse and Contactor 231
8.2 Braking Unit and Braking Resistor 232
8.3 External Operating Panel 238
8.4 Extension Cards 239
8.5 Through-hole Mounting Bracket 257

www.Farazcontrol.com واحد فروش: ۰۹۱۲۹۲۷۵۱۵۹ (مهندس رمضان زاده)

Chapter 8 Peripherals and Options

Safety Information	
WARNING	• Do not connect or disconnect wirings while the power is on. Failure to comply will result in electric shock. • Always keep breakers in OFF state at wiring or inspection.
CAUTION	• When installing the drive inside an enclosed cabinet, use cooling fan or air conditioner to keep air inlet temperature below 50°C. Failure to comply may result in overheating or a fire. • Cover the top of the drive with a temporary cloth or paper during installation so as to prevent foreign matter such as metal shavings, oil and water from falling into the drive. After installation is completed, remove the temporary cloth or paper. • Follow proper ESD procedures when operating the AC drive. Failure to comply will damage the drive because of static electricity . • Operating the motor at low speed lowers the cooling effect and increases the motor temperature, which, unless the output torque is significantly reduced, may result in damage to the motor. If the required motor speed range differs from that of the motor manufacturer, please contact them for advice. • If the torque characteristic is different with drive operation compared with operation from a commercial power supply, please check the load torque characteristic of the connected machine. • Pay attention to the load torque characteristic when selecting the drive capacity. In addition, when there is a long distance between the motor and drive, use a cable with a large cross sectional area to connect between the motor and the drive to prevent motor torque reduction • Do not lift the AC drive while the front cover is removed. Failure to comply may result in damage to PCB and terminal block.

www.Farazcontrol.com واحد فروش: ۰۹۱۲۹۲۷۵۱۵۹ (مهندس رمضان زاده)

When using the drive to drive asynchronous motor, a variety of electrical devices must be installed on both input and output sides to ensure system safety and stability.

How to configure the drive AC drive (three-phase 380 to 480 V, 18.5 kW and above) to operate with the peripheral devices is shown as below:

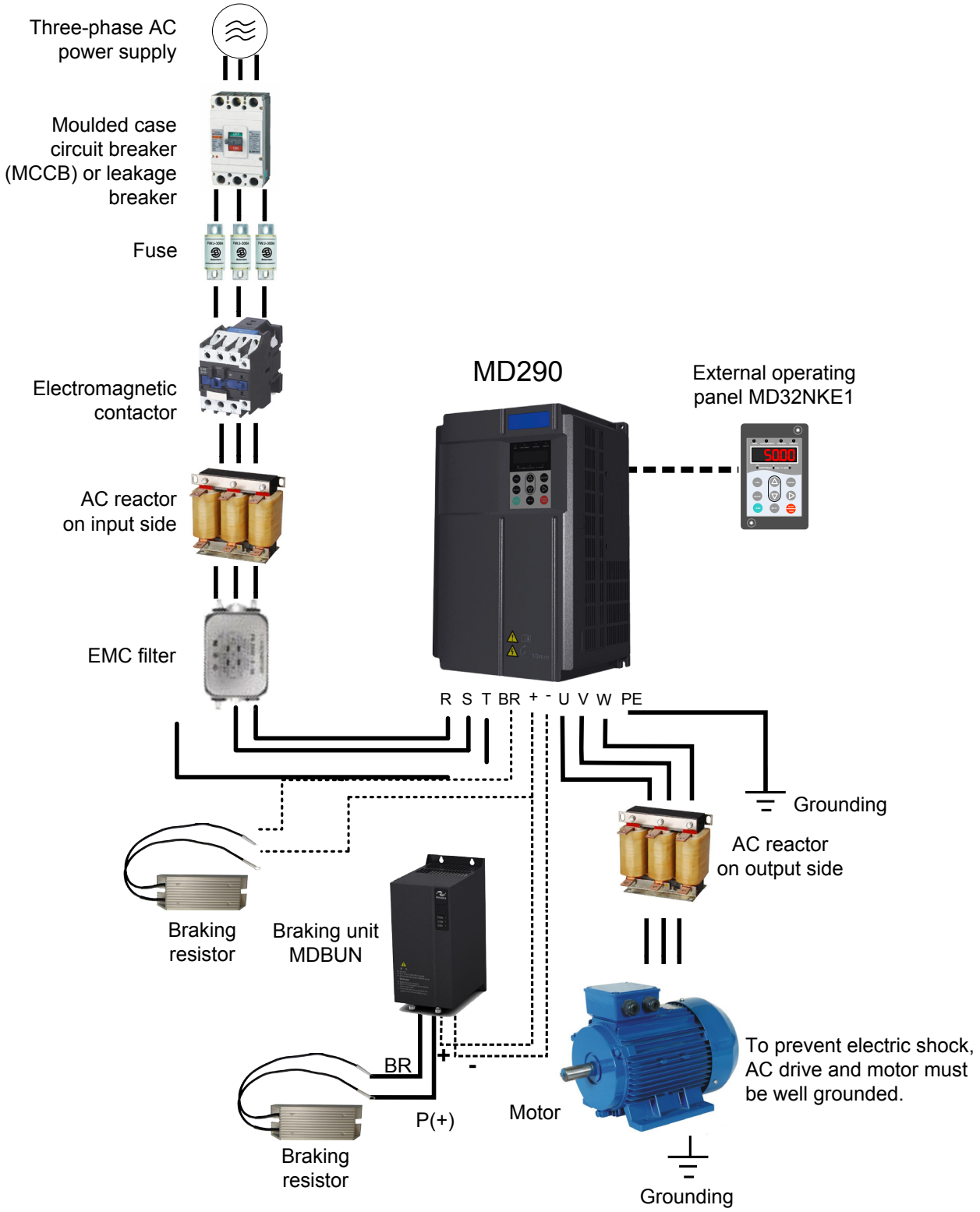

Note	Do not connect surge suppressor to output side of the AC Drive.

www.Farazcontrol.com واحد فروش: ۰۹۱۲۹۲۷۵۱۵۹ (مهندس رمضان زاده)

Description of Peripheral Electrical Devices

Device	Mounting Location	Function Description
Breaker	Power input side	MCCB: Cut off power supply when overcurrent occurs on downstream devices
		Leakage breaker: Provide protection against potentially leakage current during drive running to prevent electric shock and even a fire.
Fuse	AC drive input side	Provide protection in case of short circuit.
Contactor	Between breaker and AC drive input side	Switch ON/OFF the AC drive. Do not start/stop the AC drive frequently by switching contactor ON/OFF (time interval is at least one hour) nor use it to directly start the AC drive.
AC reactor	AC drive input side	Improve power factor of power input side. Eliminate higher harmonics of the input side effectively and prevent other devices from being damaged due to distortion of voltage waveform. Eliminate input current unbalance due to inter-phase unbalance.
EMC filter	AC drive input side	Reduce external conduction and radiation interference of the AC drive. Decrease conduction interference flowing from power supply to the AC drive and improve the anti-interference capacity of the AC drive.
DC reactor	Between EMC filter and braking resistor	It is standard configuration for the drive of 30 kW and above and optional for the drive of 18.5 to 22 kW. Improve power factor of the input side. Improve efficiency and thermal stability of the AC drive. Eliminate impact of higher harmonics of the AC drive input side and reduce external conduction and radiation interference.
Braking resistor	-	Use braking resistor for the GB-type model of 75 kW and below. Dissipate regenerative energy during motor deceleration.
Braking unit	-	Use braking unit MDBUN of Inovance and recommended braking resistor for G-type model of 90 kW and above. Dissipate regenerative energy during motor deceleration
Output reactor	Between AC drive output side and the motor, close to the AC drive	Output side of AC drive generally has much higher harmonics. When motor is far from AC drive, there is much distributed capacitance in the circuit and certain harmonics may cause resonance in the circuit, which will: Degrade motor insulation performance and damage motor in long run. Generate large leakage current and cause frequent AC drive protection trips. If distance between AC drive and motor is greater than 100 m, install an AC output reactor.
dv/dt reactor	AC drive output side, close to the AC drive	Protect motor insulation and reduce bearing current.
Output magnetic loop	AC drive output side, close to the AC drive	Reduce bearing current.
Motor	AC drive output side	Select an appropriate motor.

Note	
	• Do not install capacitor or surge suppressor on output side of AC drive. Otherwise, it may damage the AC drive. • Inputs/Outputs (main circuit) of the AC drive contain harmonics, which may interfere with communication device connected to the AC drive. Therefore, install an antierference filter to minimize interference.

www.Farazcontrol.com (مهندس رمضان زاده) واحد فروش: ۰۹۱۲۹۲۷۵۱۵۹

8.1 MCCB, Fuse and Contactor

MD290 Model	Fuse Bussmann (Pass UL Certification)		Contactor Specification	MCCB Specification
	Rated Current (A)	Model	Rated Current (A)	Rated Current (A)
Three-phase 380 to 480 V, 50/60 Hz				
MD290T18.5G/22P	80	FWH-80B	65	80
MD290T22G/30P	100	FWH-100B	65	80
MD290T30G/37P	100	FWH-100B	65	80
MD290T37G/45P	125	FWH-125B	80	100
MD290T45G/55P	150	FWH-150B	95	160
MD290T55G/75P	200	FWH-200B	115	160
MD290T75G/90P	250	FWH-250A	150	250
MD290T90G/110P	275	FWH-275A	170	250
MD290T110G/132P	325	FWH-325A	205	400
MD290T132G/160P	400	FWH-400A	245	400
MD290T160G/200P	500	FWH-500A	300	400
MD290T200G(-L)	600	FWH-600A	410	500
MD290T220P(-L)	700	FWH-700A	410	630
MD290T220G(-L)	700	FWH-700A	410	630
MD290T250P(-L)	800	FWH-800A	475	630
MD290T250G(-L)	800	FWH-800A	475	630
MD290T280P(-L)	800	FWH-800A	620	700
MD290T280G(-L)	800	FWH-800A	620	700
MD290T315P(-L)	1000	170M5016	620	800
MD290T315G(-L)	1000	170M5016	620	800
MD290T355P(-L)	1000	170M5016	620	800
MD290T355G(-L)	1000	170M5016	620	800
MD290T400P(-L)	1400	170M6017	800	1000
MD290T400G(-L)	1400	170M6017	800	1000
MD290T450P(-L)	1400	170M6017	800	1000
MD290T450G(-L)	1400	170M6017	800	1000
MD290T500P(-L)	1400	170M6017	1000	1250

www.Farazcontrol.com واحد فروش: ۰۹۱۲۹۲۷۵۱۵۹ (مهندس رمضان زاده)

8.2 Braking Unit and Braking Resistor

■ Selection of Resistance of Braking Resistor

The AC drive transfers regenerative energy generated during braking of motor to external braking resistor.

According to formula U x U/R = Pb:

- U refers to braking voltage at system stable braking.
- U value varies with the system. The 400 VAC power system usually selects 700 V braking voltage.
- Pb refers to braking power.

■ Selection of Power of Braking Resistor

In theory, power of braking resistor is the same as braking power. But in consideration of de-rating, power of braking resistor is calculated from the following formula:

K × Pr = Pb × D

- K ranges from 15% to 30%.
- Pr refers to power of braking resistor.
- D refers to braking frequency (percentage of regenerative process to whole deceleration).

The following two formulas can be obtained:

K × Pr = Pb × D = (U × U)/(R × D)

Pr = (U × U × D)/(R × K)

The user can calculate braking resistor power. K is derating coefficient of braking resistor. Low K value can ensure that braking resistor does not get overheated. The K value can be increased appropriately on the condition of good dissipation and should not exceed 30%. Failure to comply may result in a fire due to overheating of braking resistor.

Braking frequency (D) is determined by application. Typical values of braking frequency in different applications are listed in the following table.

Application	Elevator	Winding & unwinding	Centrifuge	Occasional braking load	General Application
Braking Frequency	20% to 30%	20% to 30%	50% to 60%	5%	10%

www.Farazcontrol.com واحد فروش: ۰۹۱۲۹۲۷۵۱۵۹ (مهندس رمضان زاده)

■ Selection Guidance

AC Drive Model	Applicable Motor (kW)	Braking Unit		125% Braking Torque (10% ED, Max. 10s)		Remark	Min. Resistance of Braking Resistor (Ω)
				Braking Resistor			
		Model	QTY	Specification	QTY		
MD290T18.5G	18.5	Built-in		4000 W, 32 Ω	1	AC drive model ending with letter “B”	24
MD290T22P							
MD290T22G	22			4500 W, 27 Ω	1		24
MD290T30P							
MD290T30G	30			6000 W, 20 Ω	1		19.2
MD290T37P							
MD290T37G	37			7000 W, 16 Ω	1		14.8
MD290T45P							
MD290T45G	45			9000 W, 13 Ω	1		12.8
MD290T55P							
MD290T55G	55			11000 W, 10.5 Ω	1		9.6
MD290T75P							
MD290T75G	75			15000 W, 7.7 Ω	1		6.8
MD290T90PB	90			15000 W, 7.7 Ω	1		6.8
MD290T90G	90	MDBUN-60-T	2	9000 W, 10.0 Ω	2	Input voltage ≤ 440 VAC	9.3 x 2
	90	MDBUN-60-5T	2	9000 W, 12.8 Ω	2	Input voltage > 440 VAC	10.5 x 2
MD290T110P	110	MDBUN-60-T	2	9000 W, 10.0 Ω	2	Input voltage ≤ 440 VAC	9.3 x 2
	110	MDBUN-60-5T	2	9000 W, 12.8 Ω	2	Input voltage > 440 VAC	10.5 x 2
MD290T110G	110	MDBUN-60-T	2	11000 W, 9.4 Ω	2	Input voltage ≤ 440 VAC	9.3 x 2
	110	MDBUN-60-5T	2	1000 W, 10.5 Ω	2	Input voltage > 440 VAC	10.5 x 2
MD290T132P	132	MDBUN-60-T	2	11000 W, 9.4 Ω	2	Input voltage > 440 VAC	9.3 x 2
	132	MDBUN-60-5T	2	1000 W, 10.5 Ω	2	Input voltage > 440 VAC	10.5 x 2
MD290T132G	132	MDBUN-60-T	2	13000 W, 6.8 Ω	2	Input voltage ≤ 440 VAC	6.2 x 2
	132	MDBUN-60-5T	2	13000 W, 8.8 Ω	2	Input voltage > 440 VAC	7.0 x 2
MD290T160P	160	MDBUN-90-T	2	13000 W, 6.8 Ω	2	Input voltage > 440 VAC	6.2 x 2
	160	MDBUN-90-5T	2	13000 W, 8.8 Ω	2	Input voltage > 440 VAC	7.0 x 2

www.Farazcontrol.com واحد فروش: ۰۹۱۲۹۲۷۵۱۵۹ (مهندس رمضان زاده)

AC Drive Model	Applicable Motor (kW)	Braking Unit		125% Braking Torque (10% ED, Max. 10s)		Remark	Min. Resistance of Braking Resistor (Ω)
				Braking Resistor			
		Model	QTY	Specification	QTY		
MD290T160G	160	MDBUN-90-T	2	16000 W, 6.3 Ω	2	Input voltage ≤ 440 VAC	6.2 x 2
	160	MDBUN-90-5T	2	16000 W, 7.2 Ω	2	Input voltage > 440 VAC	7.0 x 2
MD290T200P	200	MDBUN-90-T	2	16000 W, 6.3 Ω	2	Input voltage ≤ 440 VAC	6.2 x 2
	200	MDBUN-90-5T	2	16000 W, 7.2 Ω	2	Input voltage > 440 VAC	7.0 x 2
MD290T200G(-L)	200	MDBU-200-B	2	19000 W, 4.5 Ω	2	Input voltage ≤ 440 VAC	2.5 x 2
	200	MDBU-200-C	2	19000 W, 5.8 Ω	2	Input voltage > 440 VAC	3.0 x 2
MD290T220P(-L)	220	MDBU-200-B	2	19000 W, 4.5 Ω	2	Input voltage ≤ 440 VAC	2.5 x 2
	220	MDBU-200-C	2	19000 W, 5.8 Ω	2	Input voltage > 440 VAC	3.0 x 2
MD290T220G(-L)	220	MDBU-200-B	2	21000 W, 4.1 Ω	2	Input voltage ≤ 440 VAC	2.5 x 2
	220	MDBU-200-C	2	21000 W, 5.3 Ω	2	Input voltage > 440 VAC	3.0 x 2
MD290T250P(-L)	250	MDBU-200-B	2	21000 W, 4.1 Ω	2	Input voltage ≤ 440 VAC	2.5 x 2
	250	MDBU-200-C	2	21000 W, 5.3 Ω	2	Input voltage > 440 VAC	3.0 x 2
MD290T250G(-L)	250	MDBU-200-B	2	24000 W, 3.6 Ω	2	Input voltage ≤ 440 VAC	2.5 x 2
	250	MDBU-200-C	2	24000 W, 4.6 Ω	2	Input voltage > 440 VAC	3.0 x 2
MD290T280P(-L)	280	MDBU-200-B	2	27000 W, 3.2 Ω	2	Input voltage ≤ 440 VAC	2.5 x 2
	280	MDBU-200-C	2	27000 W, 4.1 Ω	2	Input voltage > 440 VAC	3.0 x 2
MD290T280G(-L)	280	MDBU-200-B	2	27000 W, 3.2 Ω	2	Input voltage ≤ 440 VAC	2.5 x 2
	280	MDBU-200-C	2	27000 W, 4.1 Ω	2	Input voltage > 440 VAC	3.0 x 2
MD290T315P(-L)	315	MDBU-200-B	3	20000 W, 4,3 Ω	3	Input voltage ≤ 440 VAC	2.5 x 2
	315	MDBU-200-C	3	20000 W, 5.5 Ω	3	Input voltage > 440 VAC	3.0 x 2
MD290T315G(-L)	315	MDBU-200-B	3	20000 W, 4.3 Ω	3	Input voltage ≤ 440 VAC	2.5 x 2
	315	MDBU-200-C	3	20000 W, 5.5 Ω	3	Input voltage > 440 VAC	3.0 x 2

www.Farazcontrol.com واحد فروش: ۰۹۱۲۹۲۷۵۱۵۹ (مهندس رمضان زاده)

AC Drive Model	Applicable Motor (kW)	Braking Unit		125% Braking Torque (10% ED, Max. 10s)		Remark	Min. Resistance of Braking Resistor (Ω)
				Braking Resistor			
		Model	QTY	Specification	QTY		
MD290T355P(-L)	355	MDBU-200-B	3	23000 W, 3.8 Ω	3	Input voltage ≤ 440 VAC	2.5 x 2
	355	MDBU-200-C	3	23000 W, 4.9 Ω	3	Input voltage > 440 VAC	3.0 x 2
MD290T355G(-L)	355	MDBU-200-B	3	23000 W, 3.8 Ω	3	Input voltage ≤ 440 VAC	2.5 x 2
	355	MDBU-200-C	3	23000 W, 4.9 Ω	3	Input voltage > 440 VAC	3.0 x 2
MD290T400P(-L)	400	MDBU-200-B	3	26000 W, 3.4 Ω	3	Input voltage ≤ 440 VAC	2.5 x 2
	400	MDBU-200-C	3	26000 W, 4.3 Ω	3	Input voltage > 440 VAC	3.0 x 2
MD290T400G(-L)	400	MDBU-200-B	3	26000 W, 3.4 Ω	3	Input voltage ≤ 440 VAC	2.5 x 2
	400	MDBU-200-C	3	26000 W, 4.3 Ω	3	Input voltage > 440 VAC	3.0 x 2
MD290T450P(-L)	450	MDBU-200-B	3	29000 W, 3.0 Ω	3	Input voltage ≤ 440 VAC	2.5 x 2
	450	MDBU-200-C	3	29000 W, 3.9 Ω	3	Input voltage > 440 VAC	3.0 x 2
MD290T450G(-L)	450	MDBU-200-B	3	29000 W, 3.0 Ω	3	Input voltage ≤ 440 VAC	2.5 x 2
	450	MDBU-200-C	3	29000 W, 3.9 Ω	3	Input voltage > 440 VAC	3.0 x 2
MD290T500P(-L)	500	MDBU-200-B	3	29000 W, 3.0 Ω	3	Input voltage ≤ 440 VAC	2.5 x 2
	500	MDBU-200-C	3	29000 W, 3.9 Ω	3	Input voltage > 440 VAC	3.0 x 2

Note

- Minimum resistance supports operating condition with ED of 10% and longest time for single braking of 10s.
- Default initial braking voltage is 760 V.
- The preceding table is for a reference only. You can select resistance and power of braking resistor based on actual needs. Resistance must not be lower than the reference value. Power may be higher than the reference value. Selection of braking resistor model is determined by generation power of motor and is also related to system inertia, deceleration time and potential energy load. For systems with high inertia, and/or short deceleration time, and/or frequent braking, select a braking resistor with higher power and lower resistance value.

www.Farazcontrol.com واحد فروش: ۰۹۱۲۹۲۷۵۱۵۹ (مهندس رمضان زاده)

■ Mounting Dimensions of MDBUN Series Braking Unit

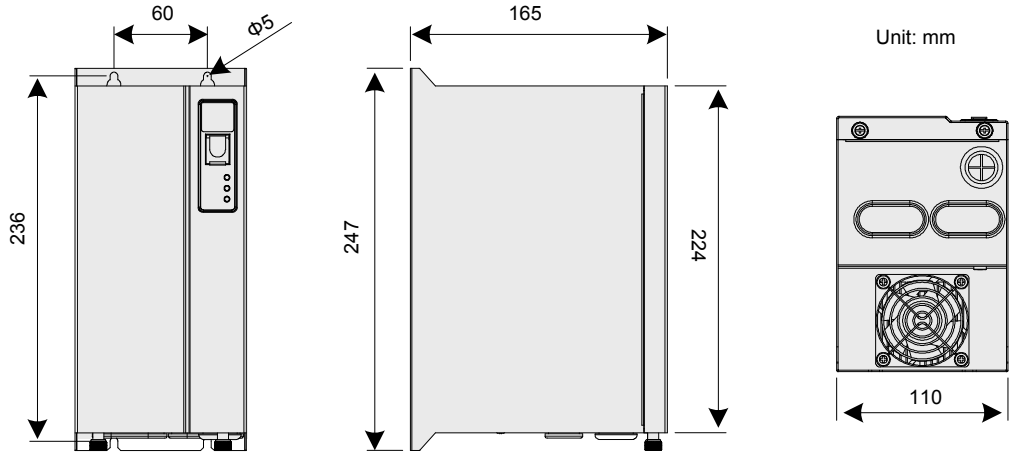

Always mount MDBUN series braking unit in an upright position.

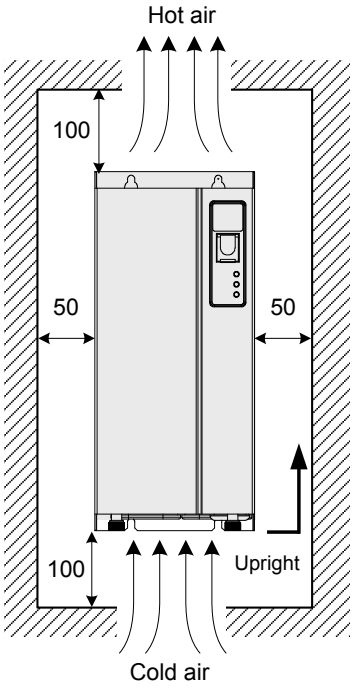

For use and installation of MDBUN series braking unit, refer to the MDBUN Series Braking Unit User Manual.

www.Farazcontrol.com واحد فروش: ۰۹۱۲۹۲۷۵۱۵۹ (مهندس رمضان زاده)

■ Mounting Dimensions of MDBU Series Braking Unit

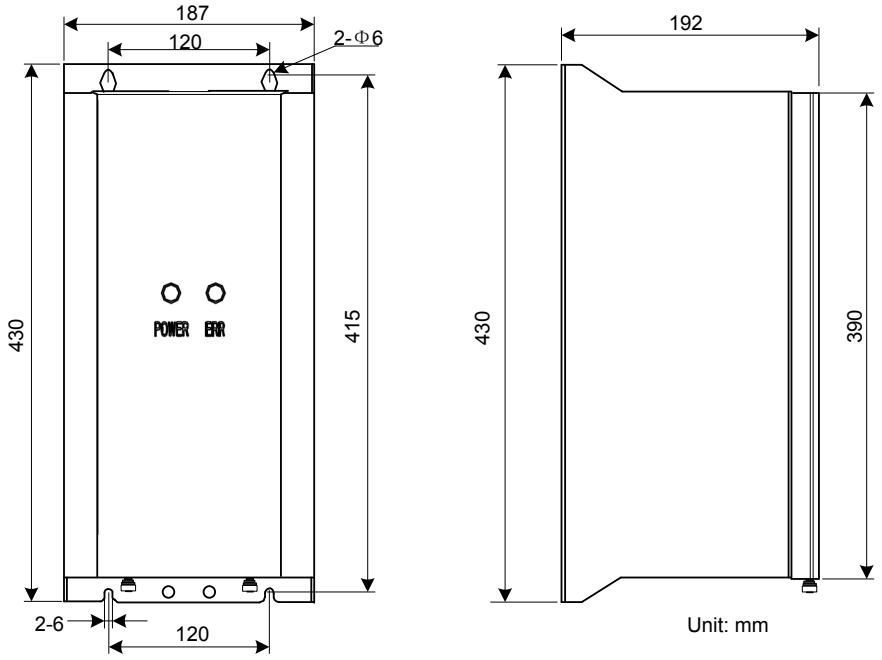

For use and installation of MDBU series braking unit, refer to the MDBU Series Braking Unit User Manual.

■ Mounting Dimensions of the AFE Unit

The AC drive of Inovance can be configured with the AFE unit, which can feedback energy produced during motor braking to the grid, saving braking unit and braking resistor can reducing heating pollution on surrounding environment.

The AFE unit has advantages of energy saving, low noise, low harmonics pollution and high power factor.

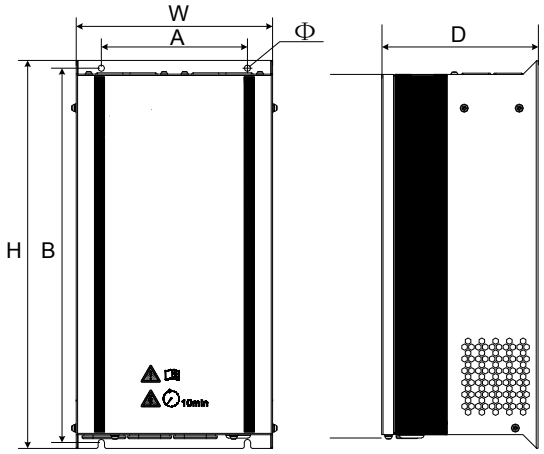

AFE Model	Dimensions (mm)						Weight (kg)
	H	W	D	A	B	Φ	
MD051T5.5G	305	190	163	130	290	7.0	7.2
MD051T7.5G	305	190	163	130	290	7.0	7.2
MD051T11G	305	190	163	130	290	7.0	7.2
MD051T15G	425	215	174	160	410	7.0	13.2
MD051T18.5G	425	215	174	160	410	7.0	13.2
MD051T22G	490	260	200	160	475	7.0	19.6
MD051T30G	490	260	200	160	475	7.0	21.3

www.Farazcontrol.com واحد فروش: ۰۹۱۲۹۲۷۵۱۵۹ (مهندس رمضان زاده)

8.3 External Operating Panel

The MD32NKE1 is the external operating panel applicable to the drive. It adopts the LED display and has the same operation mode as the operating panel on the drive. For details, refer to *Chapter 4 Operating Panel (Keypad & Display)*.

The following figures show the physical appearance and mounting dimensions of the MD32NKE1.

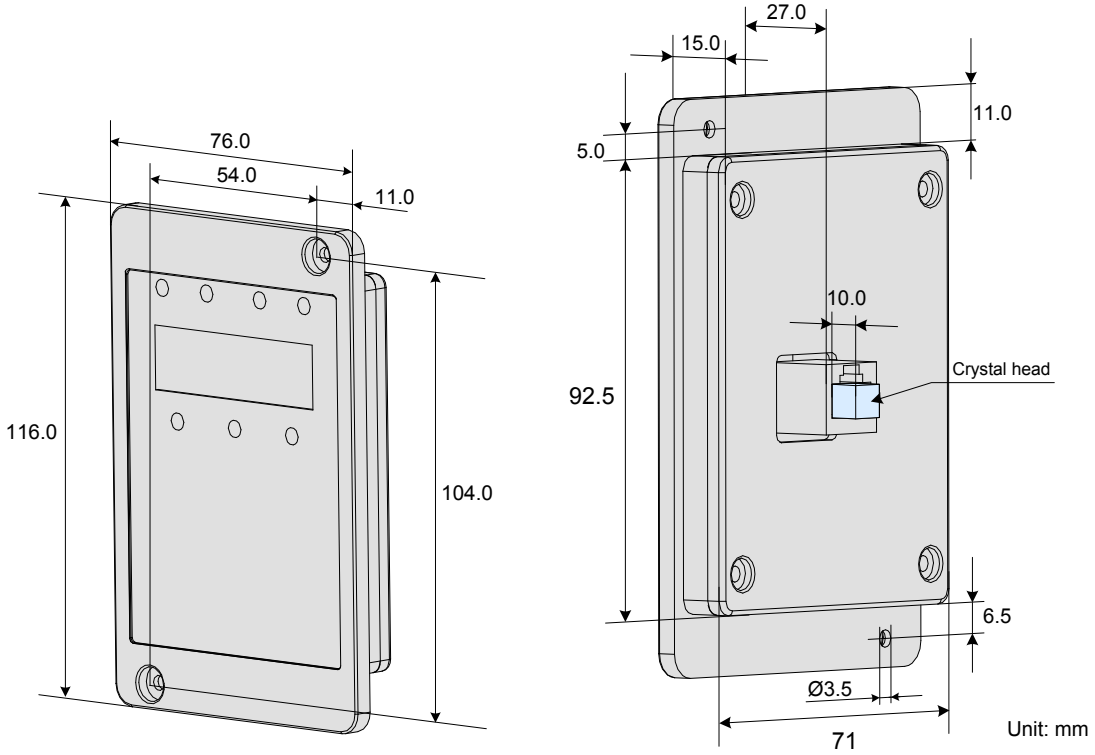

■ Connecting Cable

Inovance provides MDCAB-MD (3 meters) and MDCAB2-MD (1.5 meters) for the user to connect external operating panel. The users can prepare connecting cable by themselves.

Note	Once external operating panel is connected, the inbuilt operating panel becomes invalid.

8

www.Farazcontrol.com (مهندس رمضان زاده) ۰۹۱۲۹۲۷۵۱۵۹ واحد فروش:

8.4 Extension Cards

The drive can implement field bus by connecting various extension cares. It supports different types of encoders and user programming function. This chapter describes installation and use of these extension cards. For more details, refer to the user manual that is delivered together with product.

The following figure shows the mounting positions of these extension cards.

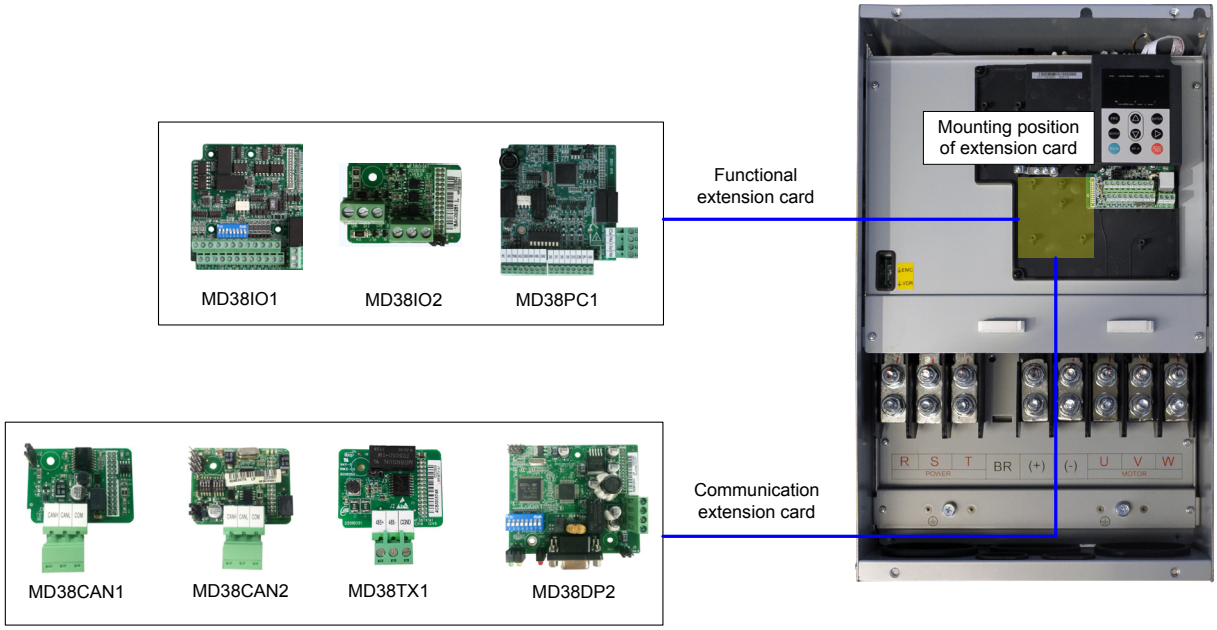

The following table lists the extension cards that are available for use with the drive.

Name	Model	Function	Frequency Dividing Coefficient	Remark
I/O extension card 1	MD38IO1	Provides the following: ● Five extra DI terminals. ● An analog input. ● A relay output. ● A digital output. ● An analog output. Supports Modbus-RTU and CANlink	-	Available for all models
I/O extension card 2	MD38IO2	Provides three extra DI terminals.	-	Available for all models.
User programmable card	MD38PC1	User-programmable extension card, completely compatible with the Inovance H1U series PLC.	-	Available for all models.
CANlink communication card	MD38CAN1	Supports CANlink	-	Available for all models.
CANopen communication card	MD38CAN2	Supports CANopen	-	Available for all models.
Modbus communication card	MD38TX1	Supports Modbus-RTU		Available for all models.
Profibus-DP communication card	MD38DP2	Supports PROFIBUS-DP		Available for all models.

www.Farazcontrol.com واحد فروش: ۰۹۱۲۹۲۷۵۱۵۹ (مهندس رمضان زاده)

8.4.1 Functional Extension Cards

■ Extension I/O Card (MD38IO1)

MD38IO1 is developed by Inovance and is designed for extension of input and output terminals of the drive. It has five digital input (DI) terminals, an analog input (AI) terminal, a relay output terminal, a digital output (DO) terminal and an analog output (AO) terminal. It also has the RS485 communication interface and CAN communication interface.

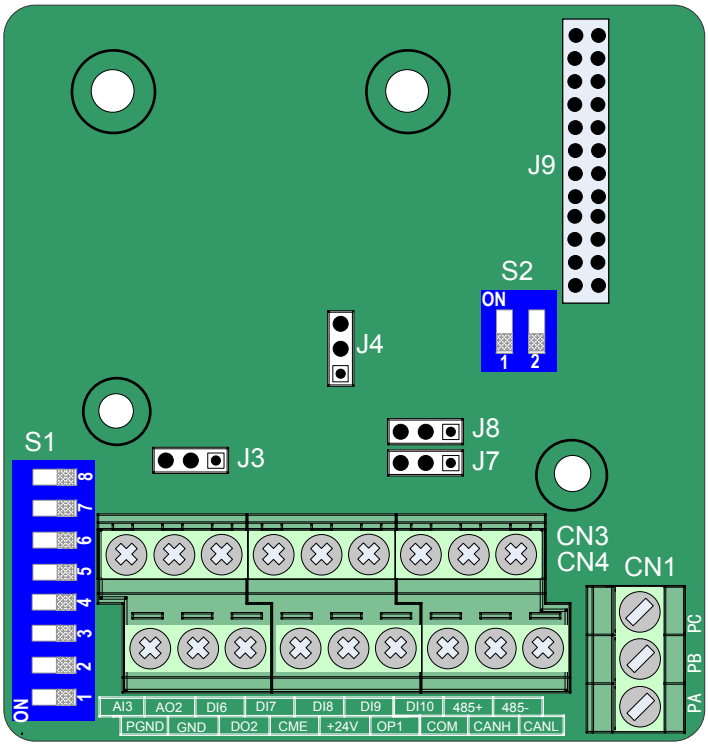

Table 8-1 Terminal descriptions of MD38IO1

Type	Terminal	Terminal Name	Function Description
Power supply	+24V-COM	External +24V power supply	Provide +24 V power supply to an external unit. Generally used to supply DI/DO terminals and external sensors. Max. output current: 170 mA
	OP1	Digital input power terminal	Connect to +24V by the jumper J8 by default. When applying an external power supply, remove the jumper J8 to disconnect the OP1 from +24V and connect the OP1 to the external power supply.
Analog input	AI3-PGND	Analog input 3	Optically-coupled isolation input, supporting differential voltage input and temperature detection resistance input Input voltage range: -10 to 10 VDC Connect the PT100 or PT1000 temperature sensor Input mode determined by DIP switch S1, multiple functions not supported simultaneously

www.Farazcontrol.com واحد فروش: ۰۹۱۲۹۲۷۵۱۵۹ (مهندس رمضان زاده)

Type	Terminal	Terminal Name	Function Description
Digital inputs	DI6-OP1	Digital input 6	Optically-coupled isolation compatible with dual-polarity inputs Input resistance: 2.4 kΩ Voltage range for inputs: 9 to 30 V
	DI7-OP1	Digital input 7	
	DI8-OP1	Digital input 8	
	DI9-OP1	Digital input 9	
	DI10-OP1	Digital input 10	
Analog output	AO2-GND	Analog output 2	Output voltage range: 0 to 10 V Output current range: 0 to 20 mA Output current with resistance range: 0 to 500 Ω
Digital output	DO2-CME	Digital output 2	Optically-coupled isolation, dual-polarity open-collector output Output voltage range: 0 to 24 V Output current range: 0 to 50 mA Note that CME1 and COM are internally insulated, but are shorted by jumper J7 internally. Remove the jumper if you need to apply an external power to DO2.
Relay outputs (RELAY2)	PA- PB	Normally-closed terminal	Contact driving capacity: 250 VAC, 3 A, Cos f = 0.4 30 VDC, 1 A
	PA- PC	Normally-closed terminal	
RS485 communication	485+/485-/COM	Communication interface	Modbus-RTU communication input and output terminal, isolated input
CAN communication	CANH/CANL/COM	Communication interface	CANlink communication input terminal, isolated input

Note	RS485 communication terminals 485+/485-/COM and CANlink communication terminals CANH/CANL/COM are completely independent and can be used simultaneously.

www.Farazcontrol.com واحد فروش: ۰۹۱۲۹۲۷۵۱۵۹ (مهندس رمضان زاده)

Table 8-2 Jumper descriptions of MD38IO1

Jumper	Description	Meaning	Setting
J3	AO2 output selection: voltage or current	Voltage: V to 10 V	
		Current: 0 to 20 mA	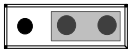
J4	CAN terminal resistor matching selection	Matching terminal resistor	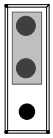
		Not matching terminal resistor	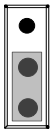
S2	RS485 terminal resistor matching selection	1 and 2 set to ON: matching terminal resistor	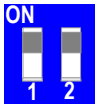
		1 and 2 set to OFF: not matching terminal resistor	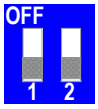
S1	AI3, PT100, PT1000 selection	AI3: 1, 2, 3 set to ON	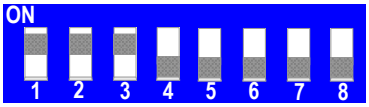
		PT1000: 4, 5, 6 set to ON	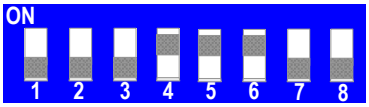
		PT100: 6, 7, 8 set to ON	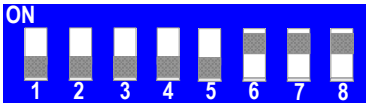

Note	• Setting of jumpers takes top view with main terminals at the bottom of the card as visual angle. Jumpers are silk-screened on the card. • When using CANlink or Modbus protocol for communication, match terminal resistor to the end AC drives by setting jumpers J4 or S2. The J4 or S2 of the middle AC drives must keep default state. If J4 or S2 is set improperly, instable communication or communication failure will be caused and Err16 or Err55 will be detected.

www.Farazcontrol.com واحد فروش: ۰۹۱۲۹۲۷۵۱۵۹ (مهندس رمضان زاده)

■ Extension Mini I/O Card (MD38IO2)

MD38IO2 is simplified version of MD38IO1 and provides three DI terminals.

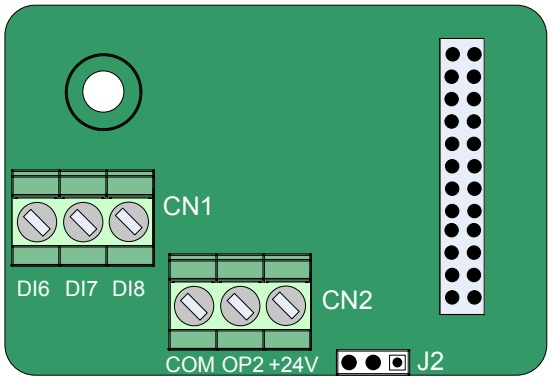

Table 8-3 Terminal descriptions of the MD38IO2

Type	Terminal	Terminal Name	Function Description
Power supply	+24V-COM	External +24V power supply	Provide +24 V power supply to an external unit. Generally used to supply DI/DO terminals and external sensors. Max. output current: 170 mA
	OP2	Digital input power terminal	It is not connected to power supply by default. It can be connected either to external power or +24V according to the actual need.
Digital inputs	DI6-OP2	Digital input 6	Optically-coupled isolation compatible with dual-polarity inputs Input resistance: 3.3 kΩ for DI6 and DI7, 2.4 kΩ for DI8 Voltage range for inputs: 9 to 30 V DI6, DI7 and DI8 are common input terminals with input frequency < 100 Hz.
	DI7-OP2	Digital input 7	
	DI8-OP2	Digital input 8	

Table 8-4 Jumper descriptions of the MD38IO2

Jumper	Description	Meaning	Setting
J2	OP2 connecting mode selection	If DI connected in SINK mode, OP2 connected to +24V	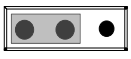
		If DI connected in SOURCE mode, OP2 connected to COM	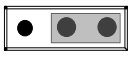

Note	Setting of jumpers takes top view with main terminals at the bottom of the card as visual angle. Jumpers are silk-screened on the card.

www.Farazcontrol.com واحد فروش: ۰۹۱۲۹۲۷۵۱۵۹ (مهندس رمضان زاده)

■ Extension PC Card (MD38PC1)

MD38PC1 card is designed with the PLC function, which enables the drive to have the PLC (user programmable) function. The card can read special variables of drive besides standard function codes and is more advantageous than combination of PLC and AC drive.

MD38PC1 is compatible with Inovance's PLC programming environment. On the condition that program capacity and peripheral devices do not exceed range of MD38PC1, programs of the user can be downloaded to MD38PC1 without modification.

MD38PC1 has the following I/O terminals and communication interface.

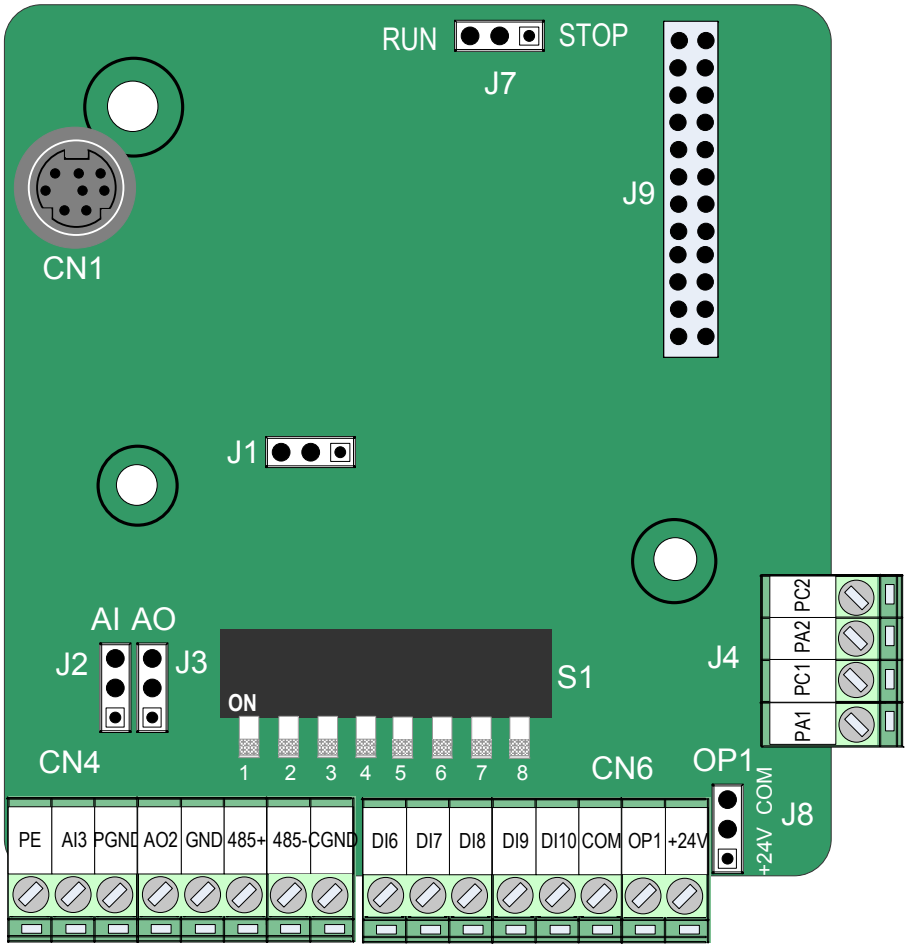

Table 8-5 Terminal descriptions of the MD38PC1

Type	Terminal	Terminal Name	Function Description
Power supply	+24V-COM	External +24V power supply	Provide +24 V power supply to an external unit. Generally used to supply DI/DO terminals and external sensors. Max. output current: 170 mA
	OP1	Digital input power terminal	Connect to +24V by the jumper J8 by default. When applying an external power supply, remove jumper J8 to disconnect OP1 from +24V and connect OP1 to external power supply.

www.Farazcontrol.com واحد فروش: ۰۹۱۲۹۲۷۵۱۵۹ (مهندس رمضان زاده)

Type	Terminal	Terminal Name	Function Description
Analog input	AI3-PGND	Analog input 3	Optically-coupled isolation input, supporting differential voltage input, current input and temperature detection resistance input Input voltage range: -10 to 10 VDC Input current range: -20 to 20 mA Connect the PT100 or PT1000 temperature sensor Input mode determined by DIP switch S1, multiple functions not supported simultaneously
Digital inputs	DI6-OP1	Digital input 6	Optically-coupled isolation compatible with dual-polarity inputs Input resistance: 2.4 kΩ Voltage range for inputs: 9 to 30 V
	DI7-OP1	Digital input 7	
	DI8-OP1	Digital input 8	
	DI9-OP1	Digital input 9	
	DI10-OP1	Digital input 10	
Analog output	AO2-GND	Analog output 2	Output voltage range: 0 to 10 V Output current range: 0 to 20 mA
Relay outputs (RELAY x 2)	PA1- PC1	Relay 1 NO terminal	Contact driving capacity: 250 VAC, 3 A, Cos f = 0.4 30 VDC, 1 A
	PA2- PC2	Relay 2 NO terminal	
RS485 communication	485+/485-	RS485 Communication interface	Modbus-RTU communication input and output terminal, isolated input
	CGND	RS485 communication isolation power ground	
RS422	CN1	User program downloading	User program downloading port

Table 8-6 Jumper descriptions of MD38PC1

Jumper	Description	Meaning	Setting
J2	AI3 input selection: voltage or current	Voltage	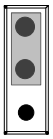
		Current	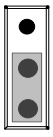

www.Farazcontrol.com واحد فروش: ۰۹۱۲۹۲۷۵۱۵۹ (مهندس رمضان زاده)

Jumper	Description	Meaning	Setting
J3	AO2 output selection: voltage or current	Voltage	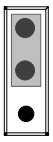
		Current	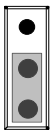
J1	RS485 terminal resistor matching selection	Matching the terminal resistor	
		Not matching the terminal resistor	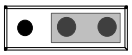
J7	Run/Stop selection	Run	
		Stop	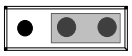
J8	OP1 connecting mode selection	If DI connected in SINK mode, OP1 connected to +24V	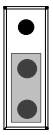
		If DI connected in SOURCE mode, OP1 connected to COM	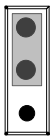
S1	AI3, PT100, PT1000 selection	AI3: 1, 2, 3 set to ON	
		PT1000: 4, 5, 6 set to ON	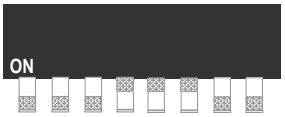
		PT100: 6, 7, 8 set to ON	

Note	Setting of jumpers takes top view with main terminals at the bottom of the card as visual angle. Jumpers are silk-screened on the card.

www.Farazcontrol.com واحد فروش: ۰۹۱۲۹۲۷۵۱۵۹ (مهندس رمضان زاده)

8.4.2 Extension Communication Cards

■ Extension CANlink Card (MD38CAN1)

MD38CAN1 is designed to connect the drive to high-speed CANlink bus. It complies with CANlink bus standard.

CANlink is based on CAN bus and developed by Inovance. It is an open communication protocol and equipments supporting this protocol can be connected to CANlink bus. Products of Inovance such as AC drive, servo drive, HMI and PLC cal be connected to CANlink bus seamlessly.

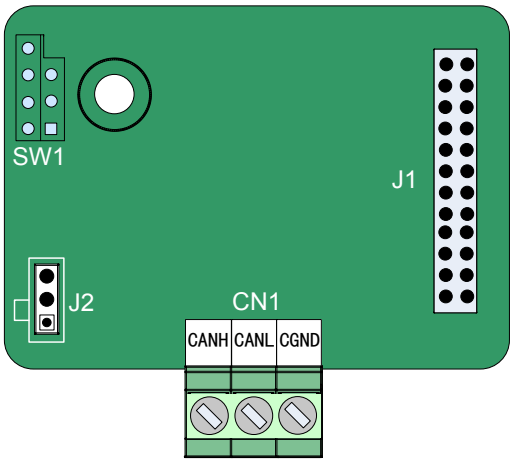

Table 8-7 Terminal descriptions of MDCAN1

Type	Terminal	Terminal Name	Function Description
CAN communication terminal	CANH	CAN positive input	Connect to positive pole of CAN bus.
	CANL	CAN negative input	Connect to negative pole of CAN bus.
	COM	Power ground	Connect to reference ground of all CAN nodes.

Table 8-8 Jumper descriptions of MDCAN1

Jumper	Description	Meaning	Setting
J2	CANlink terminal resistor matching selection	Matching the terminal resistor	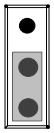
		Not matching the terminal resistor	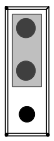

Note	Setting of jumpers takes top view with main terminals at the bottom of the card as visual angle. Jumpers are silk-screened on the card.

www.Farazcontrol.com واحد فروش: ۰۹۱۲۹۲۷۵۱۵۹ (مهندس رمضان زاده)

- Use of CANlink bus

The CANlink bus topology is shown as follows:

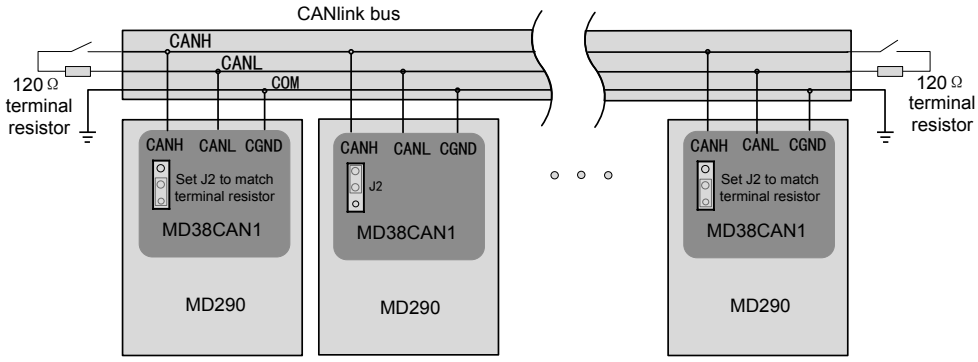

It is recommended to use an STP cable as the CAN bus and use a twisted cable to connect CANH and CANL. Connect a matching terminal resistor of 120 Ω respectively at both ends of the bus to prevent signal reflection. The CAN bus allows connection of a maximum of 64 nodes and the distance of each node branch must be smaller than 0.3 m. Connect the reference ground of all nodes together.

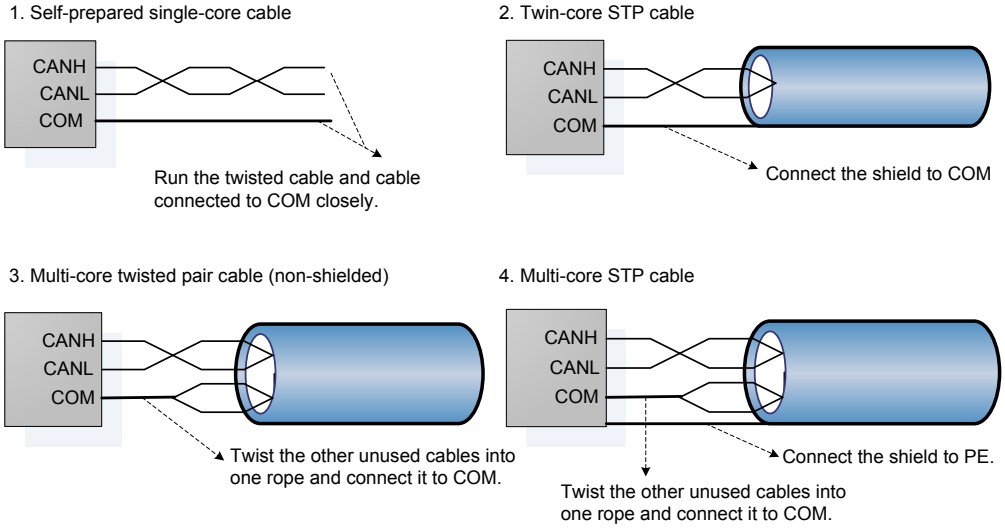

- CANlink Transmission Distance

The transmission distance of the CANlink bus is directly related to the baud rate and communication cable. The relationship between the maximum transmission distance of the CANlink bus and the baud rate is shown in the following table.

No.	Max. Transmission Distance	Baud Rate	Number of Nodes	Cable Diameter
1	25 m	1 Mbps	64	0.205 mm^2
2	95 m	500 kbps	64	0.34 mm^2
3	560 m	100 kbps	64	0. 5 mm^2
4	1100 m	50 kbps	64	0.75 mm^2

www.Farazcontrol.com واحد فروش: ۰۹۱۲۹۲۷۵۱۵۹ (مهندس رمضان زاده)

■ Extension CANopen Card (MD38CAN2)

MD38CAN2 is designed to connect the drive to high-speed CANopen bus. CANopen is an international field bus standard. Equipments supporting this protocol can be connected to the CANopen bus.

MD38CAN2 supports the following five protocols:

1. The Node Guard protocol, with which master can read equipment status
2. The Heartbeat protocol, with which slave detects current state to master regularly
3. The SDO that supports accelerated transmission mechanism only and transmits one function code (two bytes)
4. Three TPDOs and three RPDOs
5. Emergency object

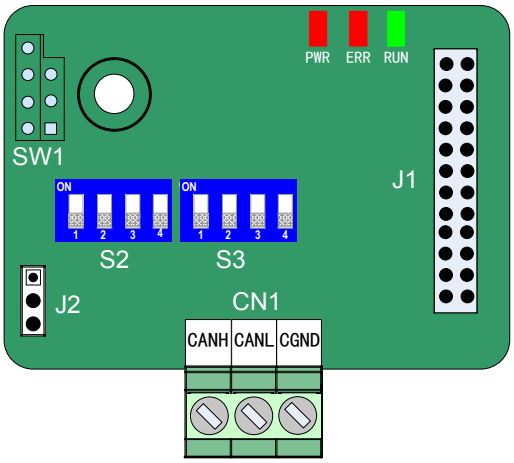

Table 8-9 Terminal descriptions of MDCAN2

Type	Terminal	Terminal Name	Function Description
CAN communication terminal	CANH	CAN positive input	Connect to the positive pole of the CAN bus.
	CANL	CAN negative input	Connect to the negative pole of the CAN bus.
	COM	Power ground	Connect to the reference ground of all CAN nodes.

Table 8-10 Jumper descriptions of MDCAN2

Jumper	Description	Meaning	Setting
J2	CANopen terminal resistor matching selection	Matching the terminal resistor	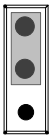
		Not matching the terminal resistor	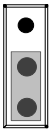

Note	Setting of jumpers takes top view with main terminals at the bottom of the card as visual angle. Jumpers are silk-screened on the card.

www.Farazcontrol.com واحد فروش: ۰۹۱۲۹۲۷۵۱۵۹ (مهندس رمضان زاده)

- DIP switch setting

Table 8-11 Descriptions of DIP switch setting

Baud Rate		Definition	Address setting						Definition	DIP Switch
1	2		3	4	5	6	7	8		
0	0	125Kbps	0	0	0	0	0	0	Reserved	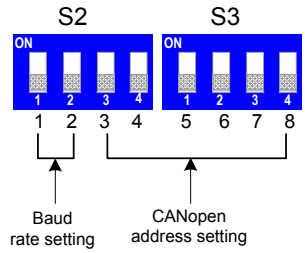
			0	0	0	0	0	1	1	
0	1	250Kbps	0	0	0	0	1	0	2	
			0	0	0	0	1	1	3	
1	0	500Kbps	...						…	
			1	1	1	1	0	1	61	
1	1	1Mbps	1	1	1	1	1	0	62	
			1	1	1	1	1	1	63	

- Indicators

Table 8-12 Descriptions of indicators

Indicator	State	Description
PWR (in red)	ON	Power-on is normal.
	OFF	Power-on is abnormal. Check whether the installation is proper.
ERR (in red)	ON	The communication of the AC drive times out.
	Flashing quickly	The CANopen address is set incorrectly.
	Flashing twice	The CANopen messages emergently.
RUN (in green)	ON	The CANopen enters the "Operational" state.
	Flashing	The CANopen enters the "Pre-Operational" state.
	OFF	The CANopen enters the "Stopped" state.

Note	CANopen has the same bus topology and wiring method as CANlink does.

www.Farazcontrol.com واحد فروش: ۰۹۱۲۹۲۷۵۱۵۹ (مهندس رمضان زاده)

■ Extension RS485 Card (MD38TX1)

MD38TX1 is specially designed to provide the drive with RS485 communication function. It adopts isolation scheme and electrical parameters conform to international standard. It helps to implement control of drive running and parameter setting through remote serial interface.

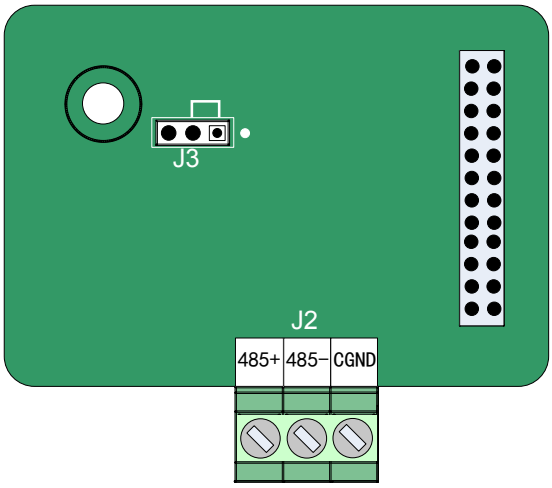

Table 8-13 Terminal descriptions of MD38TX1

Type	Terminal	Terminal Name	Function Description
RS485 communication terminal	485+	RS485 positive input	RS485 communication terminal with isolation input
	485-	RS485 negative input	RS485 communication terminal with isolation input
	CGND	RS485 Power ground	Isolated power

Table 8-14 Jumper descriptions of MD38TX1

Jumper	Description	Meaning	Setting
J3	RS485 terminal resistor matching selection	Matching the terminal resistor	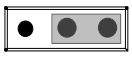
		Not matching the terminal resistor	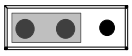

Note	Setting of jumpers takes top view with main terminals at the bottom of the card as visual angle. Jumpers are silk-screened on the card.

- RS485 bus topology

  The RS485 bus topology is shown as follows:

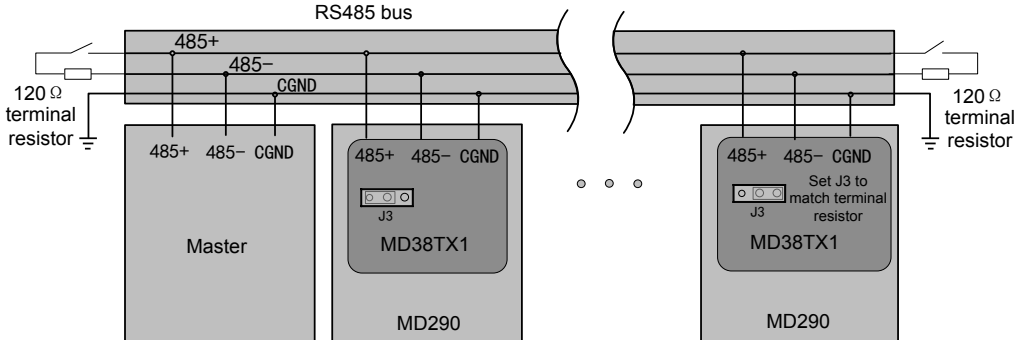

www.Farazcontrol.com واحد فروش: ۰۹۱۲۹۲۷۵۱۵۹ (مهندس رمضان زاده)

It is recommended to use an STP cable as the RS485 bus and use a twisted cable to connect 485+ and 485-. Connect a matching terminal resistor of 120 Ω respectively at both ends of the bus to prevent signal reflection. The RS485 bus allows connection of a maximum of 128 nodes and the distance of each node branch must be smaller than 3 m. Connect the reference ground of all nodes together.

The connecting modes of multiple nodes are described as below:

Daisy chain connection mode

Recommended

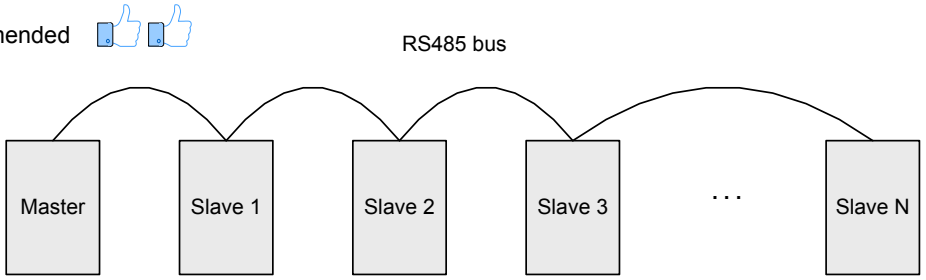

Branching connection mode

Recommended

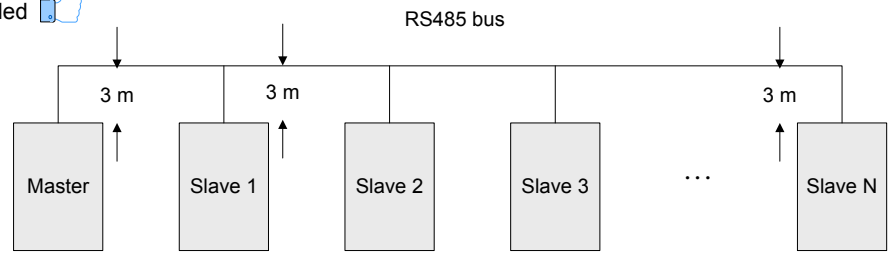

Note	Distance from the bus to the node cannot exceed 3 m.

Star connection mode (prohibited)

Prohibited

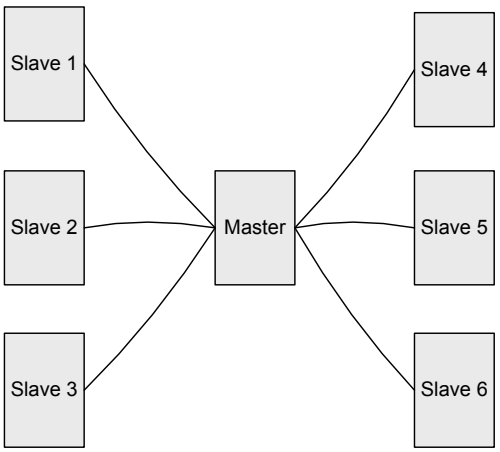

8

www.Farazcontrol.com (مهندس رمضان زاده) ۰۹۱۲۹۲۷۵۱۵۹ واحد فروش:

- Terminal wiring

  – Terminal wiring if node has CGND

    MD38TX1 has three cables to connect 485+, 485- and CGND terminals respectively. Check that RS485 bus on site has these three cables and terminals are not connected reversely or wrongly.

    If a shielded cable is used, shield must also be connected to CGND. Except CGND, prevent shield from touching anywhere of the drive including drive housing and grounding terminal.

    Due to cable attenuation, if connection length is larger than 3 m, use AGW26 or a thicker cable. Always use a twisted pair cable to connect 485+ and 485- respectively.

    Non-shielded multi-core twisted pair cable and STP cable are recommended. If non-shielded multi-core twisted pair cable is used, take twisted pair to connect 485+ and 485- and twist the unused cables into one rope and connect it to CGND.

    If an STP cable is used, connect twisted pair to 485+ and 485- respectively and shield to CGND. Shield can be connected to CGND only. It must not be connected to ground.

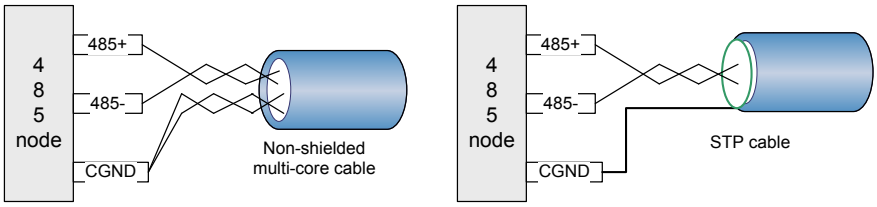

  – Terminal wiring if node does not have CGND

    For nodes without CGND, do not connect CGND cable or shield to PE of node directly.

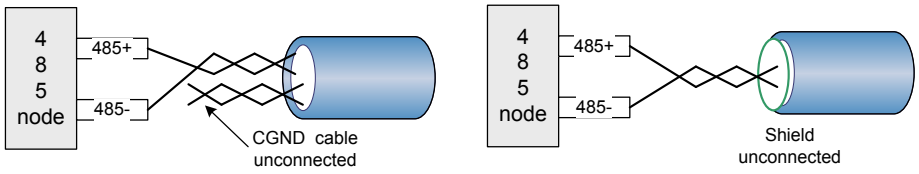

    Take the following steps to handle it.

    Step 1: Check whether a common reference ground of 485 circuit exists on other ports of this node. If yes, connect CGND cable or shield to the pin.

    Step 2: Check whether reference ground of 485 circuit exists on board of node. If yes, connect CGND cable or shield to it.

    Step 3: If reference ground of 485 circuit is not found, keep CGND cable or shield unconnected and use an extra ground cable to connect this node to PE of other nodes.

- Transmission Distance

  Maximum number of nodes and transmission distance of standard RS485 circuit vary with different baud rates, as listed in the following figure:

No.	Baud Rate	Max. Transmission Distance	Number of Nodes	Cable Diameter
1	115.2 Kbps	100 m	128	AWG 26 (0.1 mm^2)
2	19.2 Kbps	1000 m	128	AWG 26 (0.1 mm^2)

  For details of the Modbus communication protocol, see *7.5 Modbus Communication Protocol.*

www.Farazcontrol.com واحد فروش: ۰۹۱۲۹۲۷۵۱۵۹ (مهندس رمضان زاده)

■ Extension PROFIBUS-DP Card (MD38DP2)

MD38DP2, complying with international PROFIBUS field bus standard, is designed to connect the drive to PROFIBUS-DP bus. This card can improve communication efficiency and implement AC drive networking function. It enables the drive to be a slave in the bus, controller by the master.

Besides PROFIBUS-DP communication, MD38DP2 provides CANlink communication interface.

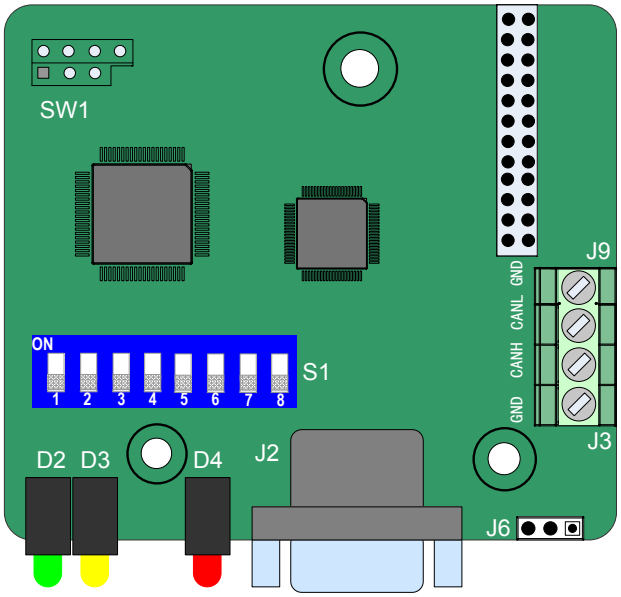

Table 8-15 Terminal descriptions of MD38DP2

Type	Terminal	Terminal Name	Function Description	Terminal Arrangement
PROFIBUS communication terminal (J2)	1, 2, 7, 9	NC	Vacant internally	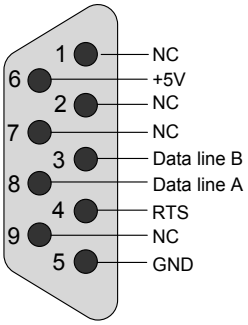
	3	Data line B	Data line positive	
	4	RTS	Request of sending signal	
	5	GND	Isolation 5 V power ground	
	6	+5V	Isolation 5 V power supply	
	8	Data line A	Data line negative	
CANlink communication terminals (J3, J9)	CANH	CAN positive input	Data line positive	-
	CANL	CAN negative input	Data line negative	
	GND	Power ground	Isolation 5 V power ground	

Table 8-16 Jumper descriptions of MD38DP2

Jumper	Description	Meaning	Setting
J6	CANlink terminal resistor matching selection	Matching the terminal resistor	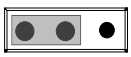
		Not matching the terminal resistor	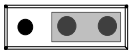

www.Farazcontrol.com واحد فروش: ۰۹۱۲۹۲۷۵۱۵۹ (مهندس رمضان زاده)

- DIP switch setting

Profibus-DP Communication Slave Address Setting								Slave Address	DIP Switch
1	2	3	4	5	6	7	8		
Keep the OFF state (OFF: MD38DP2).	0	0	0	0	0	0	0	Reserved	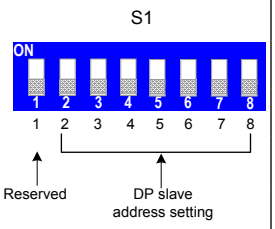
	0	0	0	0	0	0	1	1	
	0	0	0	0	0	1	0	2	
		0	0	0	0	1	1	3	
		...						…	
	1	1	1	1	1	0	1	123	
	1	1	1	1	1	1	0	124	
	1	1	1	1	1	1	1	125	

- Indicators

Indicator	Indication	State	Description
D4 in red	Power supply indicator	ON	The drive is powered on.
		OFF	The drive is not powered on or DP card is installed improperly.
D3 in yellow	DP card and master communication indicator	ON	Communication between DP card and the master is normal.
		OFF	There is no communication between DP card and the master (check PROFIBUS cable connection and setting of station No.).
		Flash	The master does not operate or error occurs on communication between DP card and the master .
D2 in green	DP card and drive communication indicator	ON	Communication between DP card and the drive is normal.
		OFF	Communication between DP card and the drive fails (check the baud rate setting).
		Flash	Interference exists on communication between DP card and the drive or extension card address is not within the rang of 1 to 125.

www.Farazcontrol.com واحد فروش: ۰۹۱۲۹۲۷۵۱۵۹ (مهندس رمضان زاده)

- PROFIBUS-DPbus topology

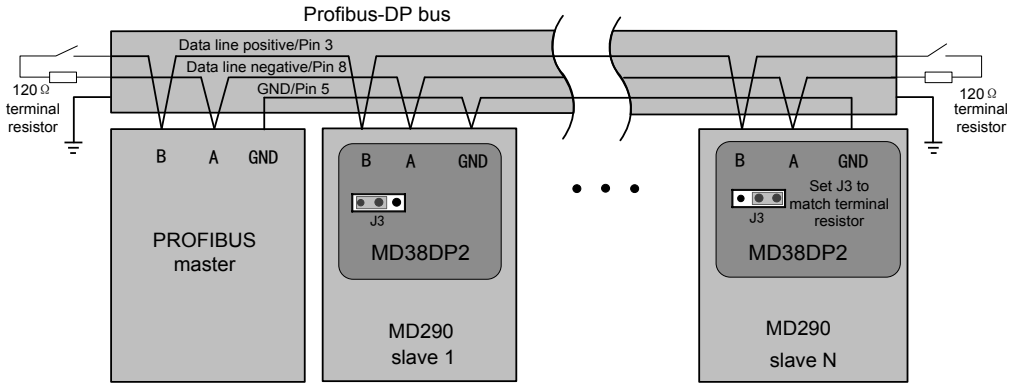

It is necessary to connect a matching terminal resistor to the end of PROFIBUS bus and set DIP switch properly. The system PEs must be reliably grounded.

Length of communication cable between MD38DP2 and PROFIBUS-DP master varies with different setting of baud rate of the master. Restrict communication cable lead length strictly according to the Siemens DB9 standard. The following table describes requirements on baud rate and communication cable lead length.

Baud Rate (Kbps)	Max. Length of Lead A (m)	Max. Length of Lead B (m)
9.6	1200	1200
19.2	1200	1200
187.5	600	600
500	200	200
1500	100	70
3000	100	Not supported
6000	100	
12000	100	

www.Farazcontrol.com واحد فروش: ۰۹۱۲۹۲۷۵۱۵۹ (مهندس رمضان زاده)

8.5 Through-hole Mounting Bracket

Figure 8-1 Bracket dimensions and hole size of MD290T18.5G/22P to MD290T22G/30P (unit: mm)

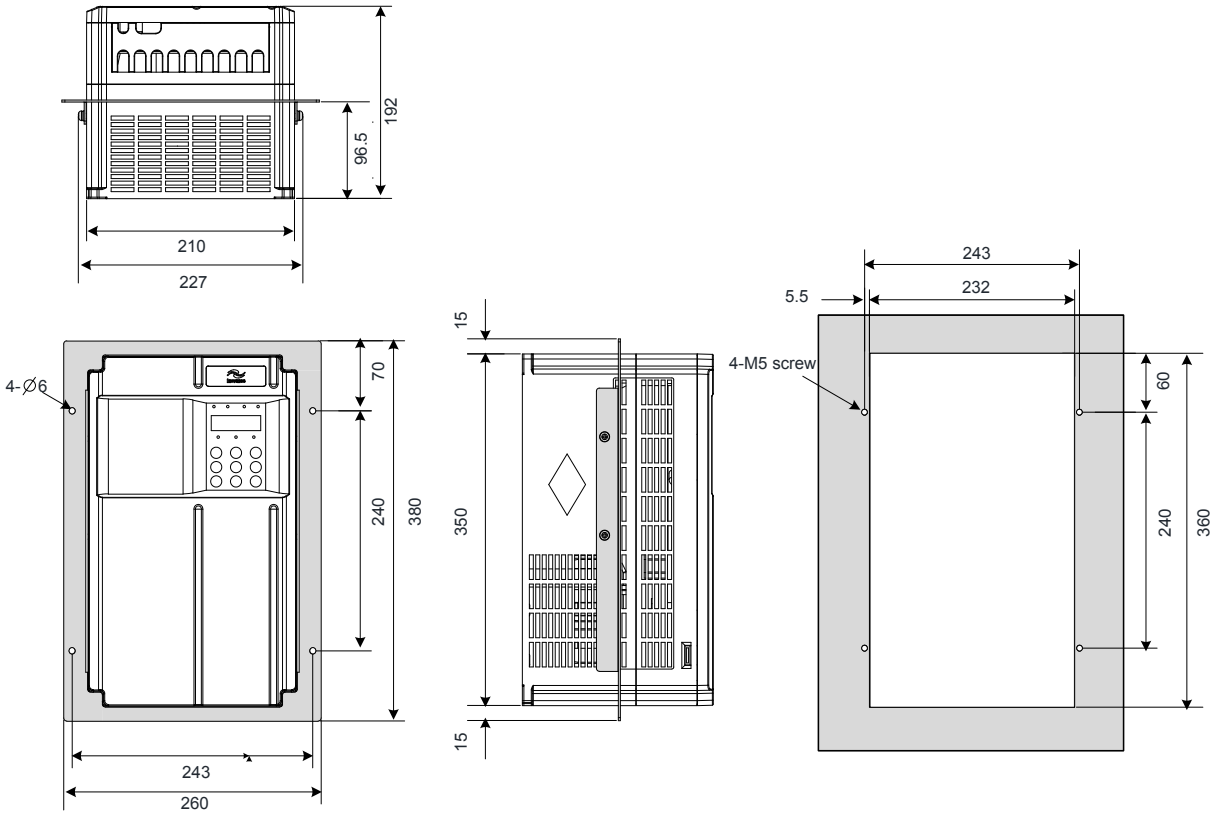

Figure 8-2 Bracket dimensions and hole size of MD290T30G/37P to MD290T37G/45P (unit: mm)

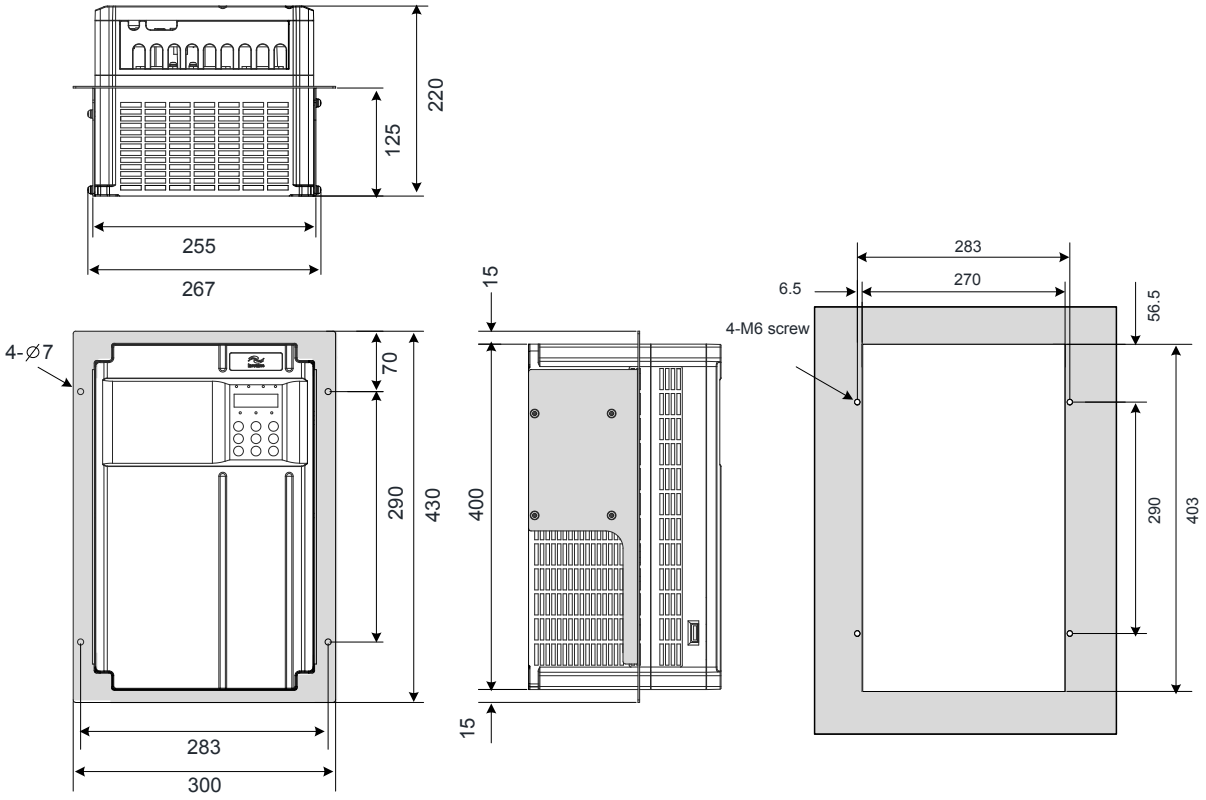

8

www.Farazcontrol.com واحد فروش: ۰۹۱۲۹۲۷۵۱۵۹ (مهندس رمضان زاده)

Figure 8-3 Bracket dimensions and hole size of MD290T45G/55P to MD290T55G/75P (unit: mm)

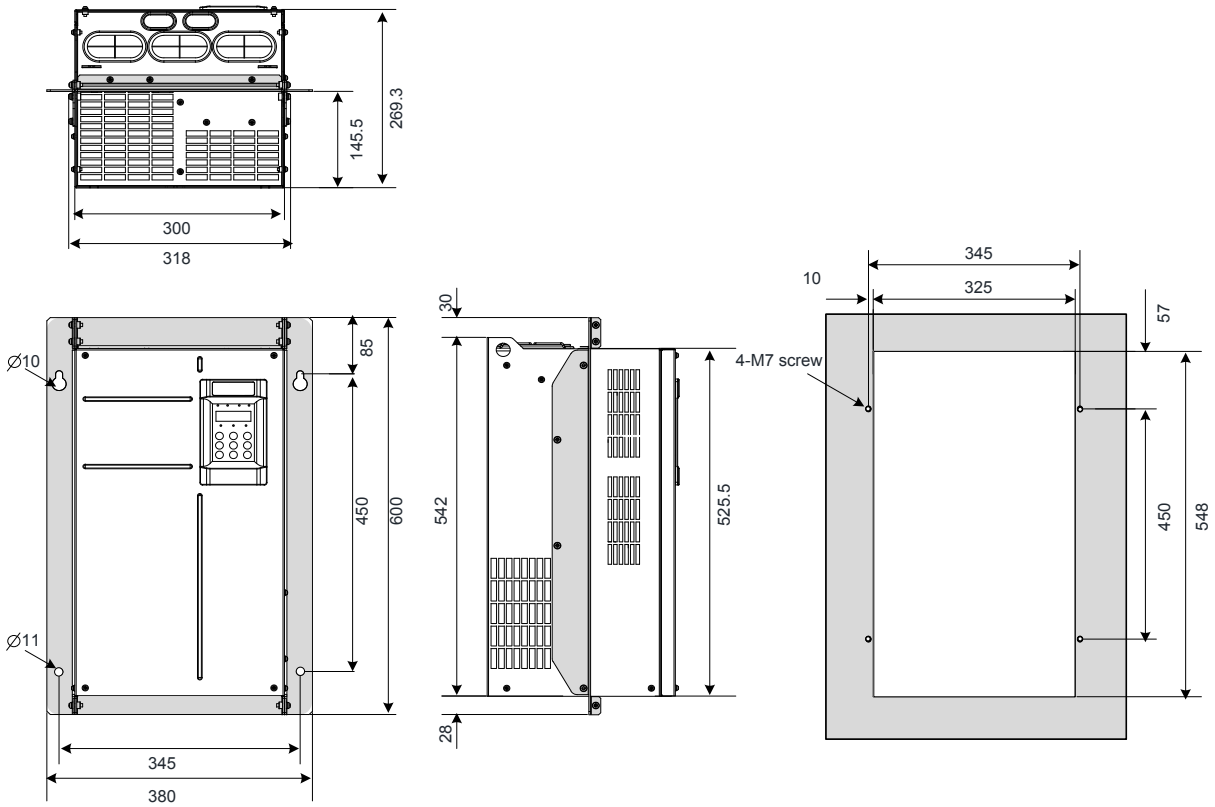

Figure 8-4 Bracket dimensions and hole size of MD290T75G/110P to MD290T110G/132P (unit: mm)

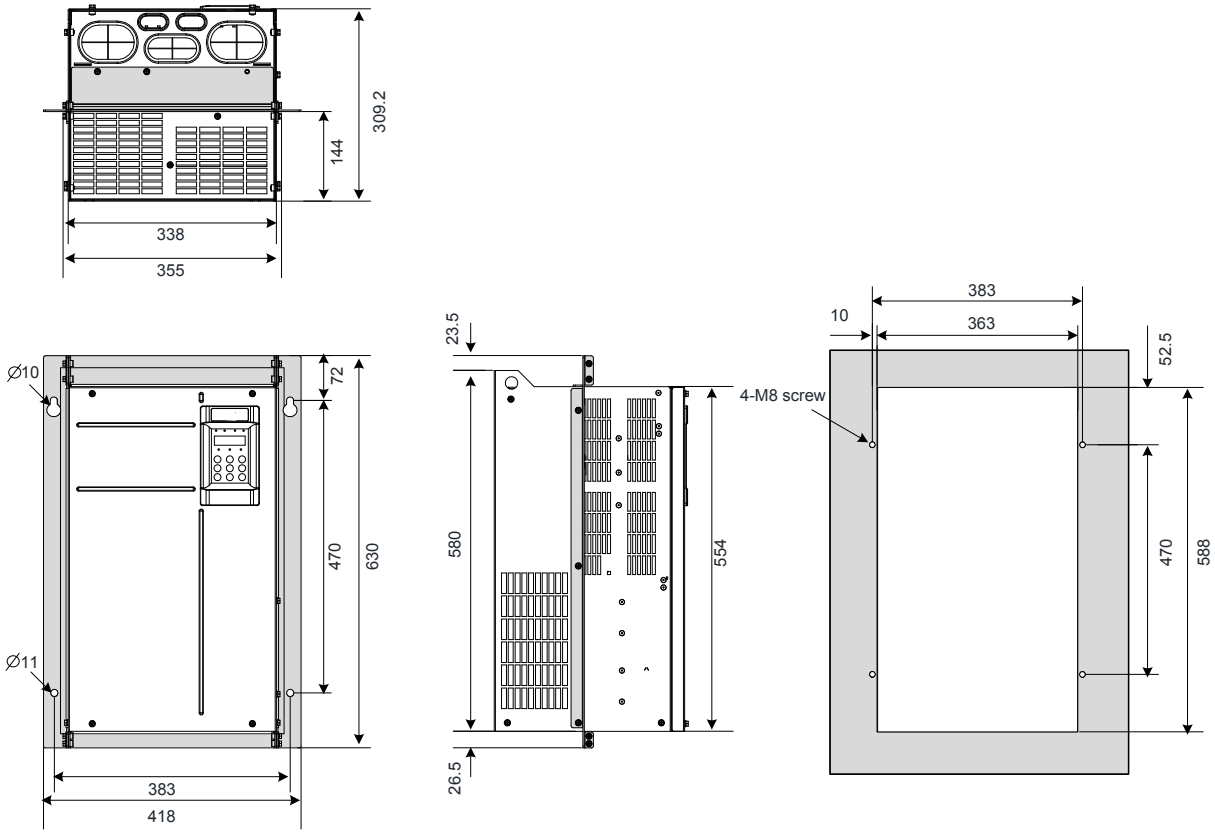

www.Farazcontrol.com واحد فروش: ۰۹۱۲۹۲۷۵۱۵۹ (مهندس رمضان زاده)

Figure 8-5 Bracket dimensions and hole size of MD290T132G/160P to MD290T160G/200P (unit: mm)

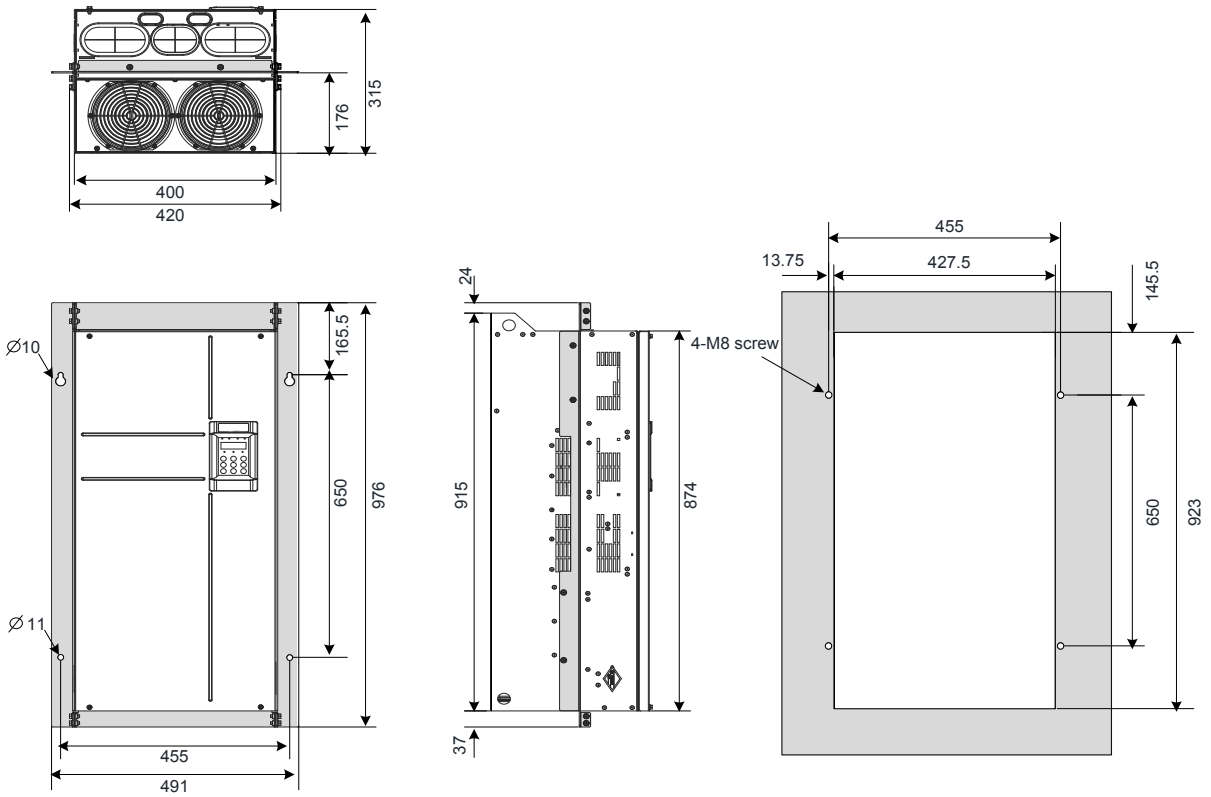

Figure 8-6 Bracket dimensions and hole size of MD290T200G(-L), MD290T220G(-L), and MD290T220P(-L) to MD290T280P(-L) (unit: mm)

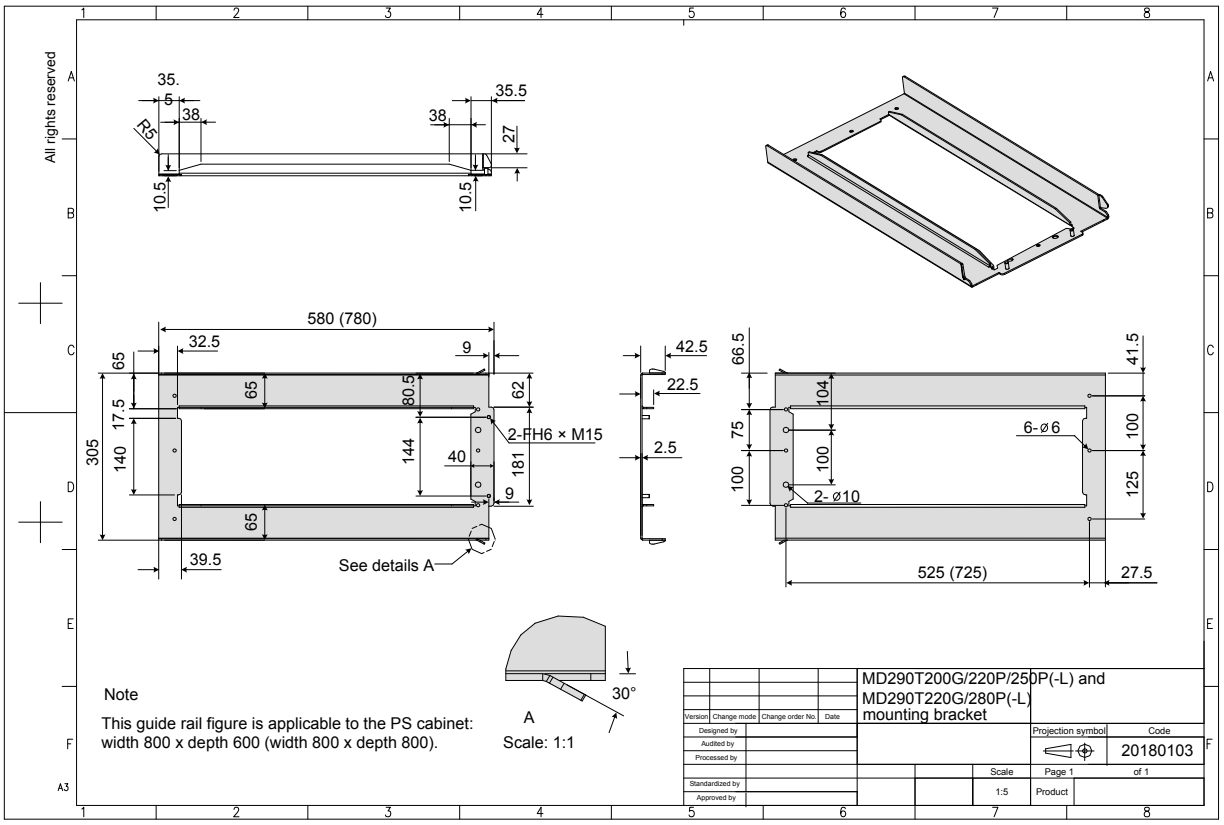

www.Farazcontrol.com واحد فروش: ۰۹۱۲۹۲۷۵۱۵۹ (مهندس رمضان زاده)

Figure 8-7 Bracket dimensions and hole size of MD290T250G(-L) to MD290T280G(-L) to MD290T315P(-L) to MD290T355P(-L) (unit: mm)

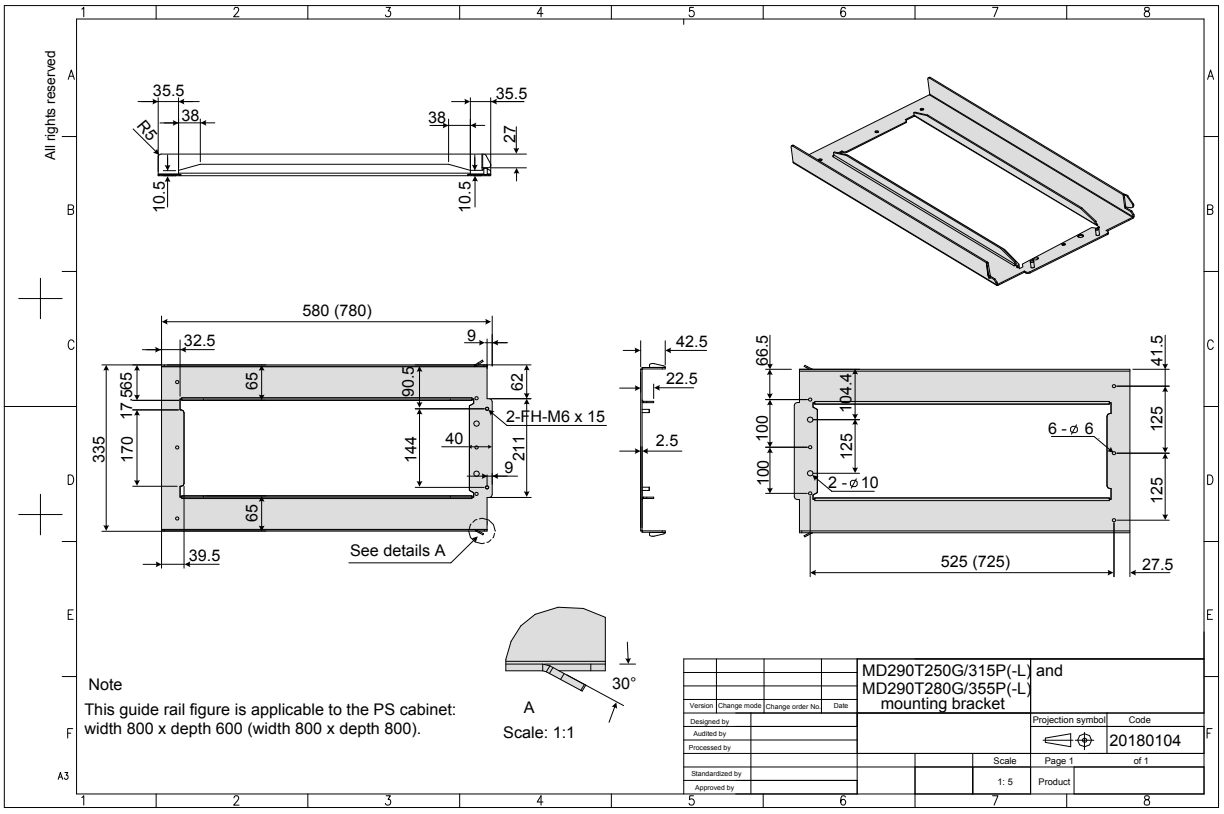

Figure 8-8 Bracket dimensions and hole size of MD290T315G(-L) to MD290T450G(-L) and MD290T400P(-L) to MD290T500P(-L) (unit: mm)

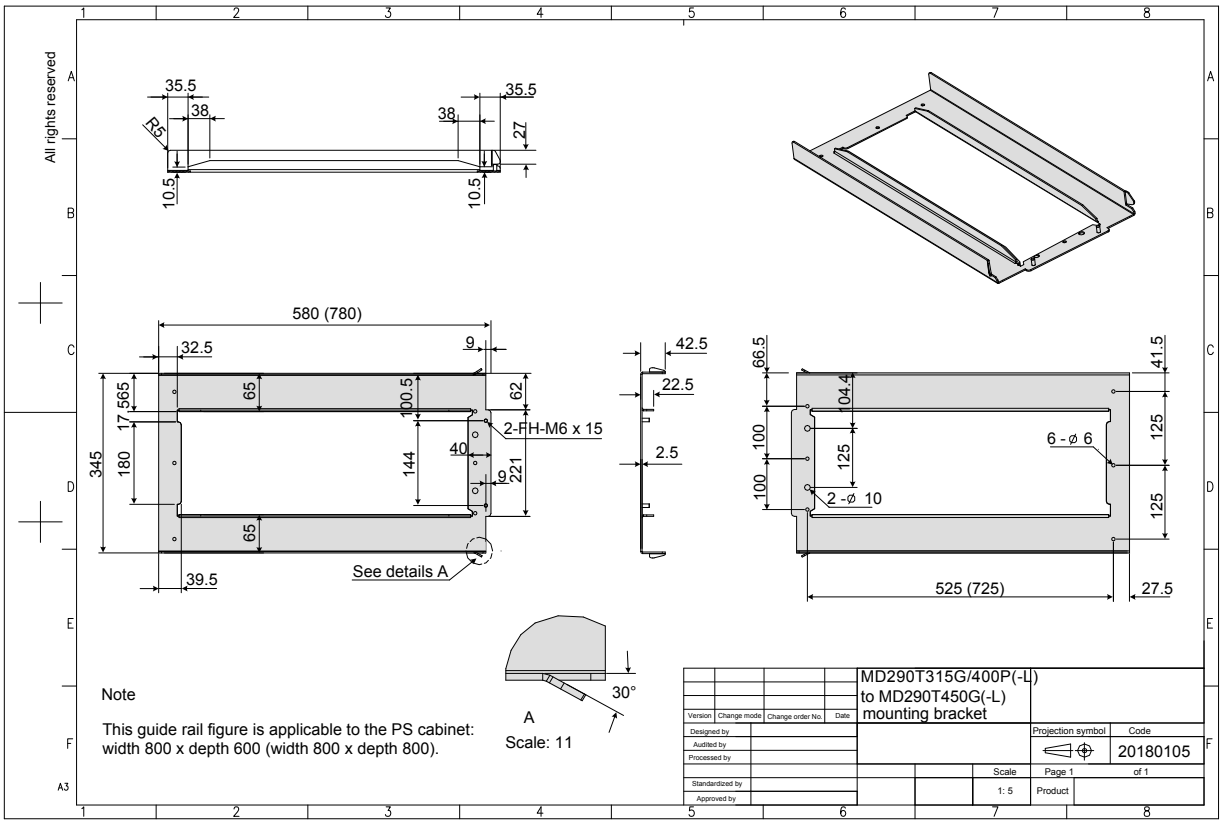

www.Farazcontrol.com واحد فروش: ۰۹۱۲۹۲۷۵۱۵۹ (مهندس رمضان زاده)

9. Maintenance and Inspection

9.1 Daily Inspection 262
9.2 Periodic Inspection 264
9.3 Lifetime of Fans and Electrolytic DC Bus Capacitors 266
9.4 Storage 270
9.5 Warranty Agreement 270

www.Farazcontrol.com واحد فروش: ۰۹۱۲۹۲۷۵۱۵۹ (مهندس رمضان زاده)

Chapter 9 Maintenance and Inspection

9.1 Daily Inspection

Safety Information

WARNING

- Do not connect or disconnect wiring while the power is on.
- Disconnect all power and wait for several minutes. Do not touch any terminals before the capacitors have fully discharged.
- Do not modify or disconnect wiring, remove optional extension card or replace the cooling fan while the power is on.
- Make sure to connect the motor-side grounding terminal. Failure to comply may result in electric shock due to touching motor housing.
- Do not allow unqualified personnel to do the repair & maintenance work.
- Installation, wiring, commissioning, repair & maintenance, and component replacement must be performed only by qualified technicians.

CAUTION

- Do not run the AC drive with front cover removed.
- Drawings in the manual are sometimes shown without covers or protective guards. Remember to install the covers or protective guards as specified first, and then perform operations in accordance with instructions.
- Tighten all terminal screws based on specified tightening torque.
- Ensure that input voltage is within permissible range. Incorrect input voltage of main circuit may result in abnormal running.
- Keep combustible materials far away from the AC drive or mount the AC drive on incombustible surfaces such as a metal wall.
- Replace the cooling fan in correct ways as specified in this chapter. Ensure correct air outlet direction of the fan. Incorrect air direction will diminish the cooling effects.
- Do not connect or disconnect motor while the drive is running. Failure to comply may result in electric shock and damage to the AC drive.
- Use shielded cables for control circuit wiring. Meanwhile, ground the shield to the grounding terminal reliably.
- Do not modify the drive circuitry. Failure to comply will damage the AC drive.
- Make sure to connect the output terminals of the AC drive and the motor terminals correctly.
- If it is necessary to change the motor rotation direction, exchange any two of UVW cables of the AC drive.
- Do not operate the AC drive that has been damaged. This is to prevent further damage to external equipments.

www.Farazcontrol.com (مهندس رمضان زاده)۰۹۱۲۹۲۷۵۱۵۹ :واحد فروش

Influence of ambient temperature, humidity, dust and vibration will cause aging of components in the AC drive, which may cause potential faults or reduce the product life. Therefore, it is necessary to carry out routine and periodic maintenance.

More frequent inspection will be required if it is used in harsh environments, such as:

- High ambient temperature
- Frequent starting and stopping
- Fluctuations in the AC power supply or load
- Excessive vibrations or shock loading
- Dust, metal dust, salt, sulfuric acid, chlorine atmospheres
- Poor storage conditions.

Check the following items daily to avoid deterioration in performance or product. Copy this checklist and sign the "checked" column after each inspection.

Inspection Item	Inspection Points	Solutions	Checked
Motor	Inspect whether abnormal oscillation or noise exists.	• Check mechanical connections. • Check power phases of the motor. • Tighten all loose screws.	
Fan	Inspect whether the cooling fan of the AC drive and the motor works abnormally.	• Check running of the drive-side cooling fan. • Check running of the motor-side cooling fan. • Check whether the cooling fan is clogged or dirty. • Check whether ambient temperature is within the permissible range.	
Installation environment	Inspect whether the cabinet and cable duct are abnormal.	• Check for input and output cables with insulation damaged. • Check for vibration of hanging bracket. • Check whether copper ground bars and terminals become loose or get corroded.	
Load	Inspect whether the drive output current exceeds the drive or motor rating for an extended period of time.	• Check for setting of motor parameters. • Check for excessive load. • Check for mechanical vibration (< 0.6 g on normal condition).	
Input voltage	Check main power supply and control voltage.	• Adjust the input voltage to the permissible range. • Check whether start of heavy load exists.	

www.Farazcontrol.com واحد فروش: ۰۹۱۲۹۲۷۵۱۵۹ (مهندس رمضان زاده)

9.2 Periodic Inspection

9.2.1 Periodic Inspection Items

Perform periodic inspection in places where daily inspection is not easy to reach. Always keep the AC drive clean. Clear away dusts especially metal powder on the surface of the AC drive, to prevent dust from entering the drive. Clear oil dirt from the cooling fan of the AC drive.

WARNING

- Do not perform inspection work while the power is on.
- Disconnect all power and wait for several minutes. Do not touch any terminal before the capacitors have fully discharged.

Check the following items every day to avoid deterioration in performance or product. Copy this checklist and sign the "checked" column after each inspection.

Inspection Item	Inspection Points	Solutions	Checked
General	Inspect for wastes, dirt and dust on the surface of the AC drive.	Use a vacuum cleaner to suck up wastes and dust to prevent direct touching. Wipe surface dirt gently with a soft cloth immersed in neutral detergent.	
Cables	Inspect power cables and connections for discoloration. Inspect wiring insulation for aging or wear.	Replace cracked cable. Replace damaged terminals.	
Peripheral devices such as relay and contactor	Inspect contactors and relays for excessive noise during operation. Inspect coils for signs of overheating such as melted or cracked insulation.	Check whether the coil voltage is normal. Replace abnormal peripheral device.	
Ventilation	Inspect whether ventilation and heatsink are clogged. Check whether the fan is damaged.	Clean ventilation. Replace the fan.	
Control circuit	Inspect for control components in poor contact. Inspect for loose terminal screws. Inspect for control cables with cracked insulation.	Clear away foreign matters on the surface of control cables and terminals. Replace damaged or corroded control cables.	

www.Farazcontrol.com واحد فروش: ۰۹۱۲۹۲۷۵۱۵۹ (مهندس رمضان زاده)

9.2.2 Insulation Test on Main Circuit

Note	• Before measuring insulation resistance with megameter (500 VDC megameter recommended), disconnect the main circuit from the AC drive. • Do not conduct the dielectric strength test. High voltage (> 500 V) test need not be performed again because it has been completed before delivery.

Figure 10-1 Test insulation on the main circuit

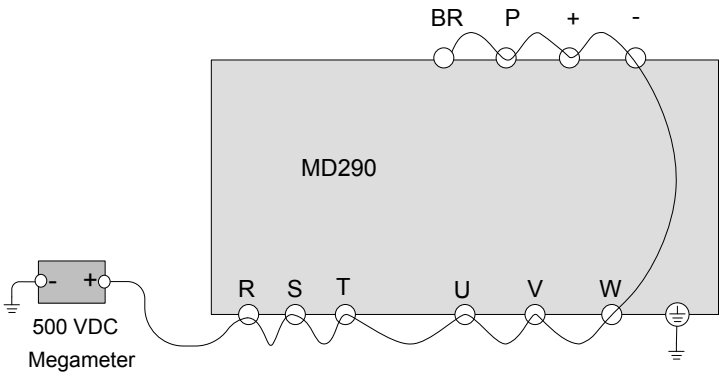

The measured insulation resistance must be greater than 5 MΩ.

Before test, remove the VDR screw, as shown in the following position.

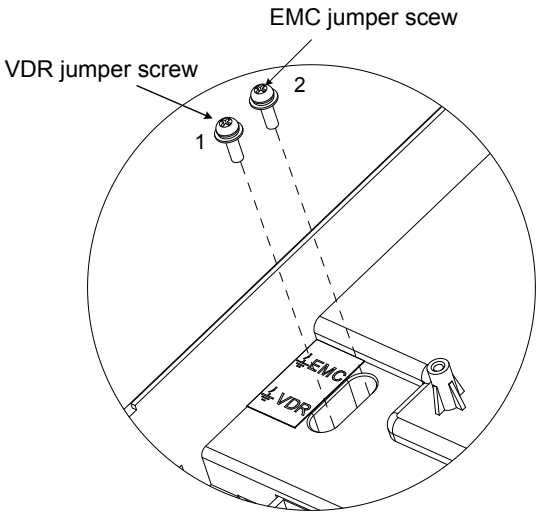

9

www.Farazcontrol.com واحد فروش: ۰۹۱۲۹۲۷۵۱۵۹ (مهندس رمضان زاده)

9.3 Lifetime of Fans and Electrolytic DC Bus Capacitors

Wearing components of the AC drive include the cooling fan and bus electrolytic capacitor. Their service life is related to the operating environment and maintenance status. Generally, the service life is shown as follows:

Component	Service Life	Possible Cause	Judging Criteria
Fan	≥ 5 years	• Bearing worn • Blade aging	• Whether there is crack on the blade • Whether there is abnormal vibration noise upon startup
Electrolytic DC Bus Capacitor	≥ 5 years	• Input power supply in poor quality • High ambient temperature • Frequent load jumping • Electrolytic aging	• Whether there is liquid leakage. • Whether the safe valve has projected. • Measure the static capacitance. • Measure the insulation resistance.

The standard service time indicates the service time when the AC drive is used on the following conditions:

- Ambient temperature: about 40°C on average yearly
- Load rate: below 80%
- Operating rate: below 24 hours per day

You can determine when to replace these parts according to the actual operating time.

■ Number of Fans on the Drive

MD290 Model		Number of Fans
MD290T18.5G/22P	MD290T22G/30P	1
MD290T30G/37P	MD290T37G/45P	1
MD290T45G/55P	MD290T55G/75P	1
MD290T75G/90P	MD290T90G/110P	2
MD290T110G/132P	MD290T132G/160P	2
MD290T160G/200P	-	2
MD290T200G(-L)	MD290T220P(-L)/	2
MD290T250P(-L)	-	2
MD290T220P(-L)	MD290T250P(-L)	2
MD290T220G(-L)	MD290T280P(-L)	2
MD290T250G(-L)	MD290T315P(-L)	3
MD290T280G(-L)	MD290T355P(-L)	3
MD290T315G(-L)	MD290T400P(-L)	3
MD290T355G(-L)	MD290T450P(-L)	3
MD290T400G(-L)	MD290T500P(-L)	3
MD290T450G(-L)	-	3

www.Farazcontrol.com واحد فروش: ۰۹۱۲۹۲۷۵۱۵۹ (مهندس رمضان زاده)

■ Removing and Installing the Fan of a Plastic Housing (MD290T18.5G/22P to MD290T37G/45P)

Removal

1. Depress the fan cover hook and take the fan cover off the top of the drive.

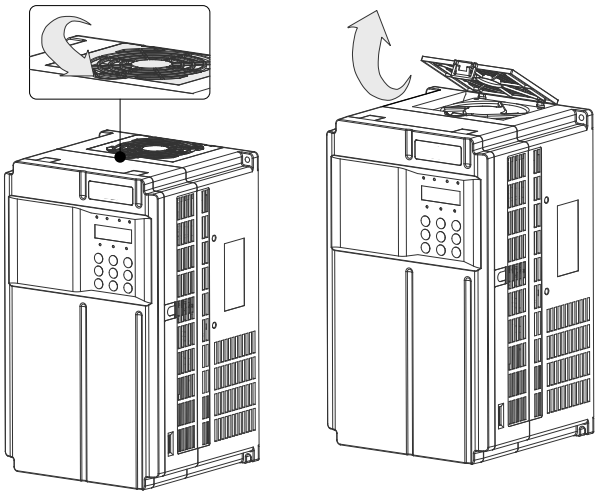

2. Pull the fan upward and disconnect the pluggable connector of power cable.

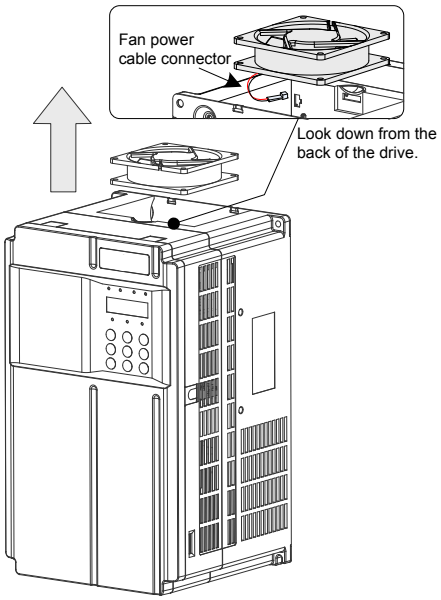

Installing

1. Plug in the fan power cable .

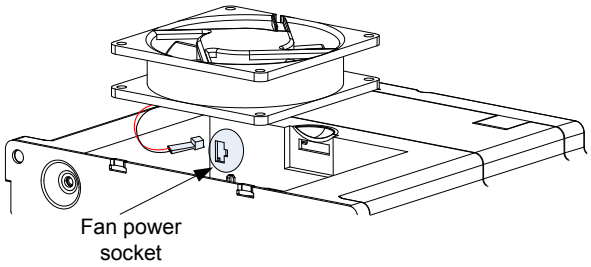

2. Install the fan into the drive and ensure that the mounting pins are aligned.

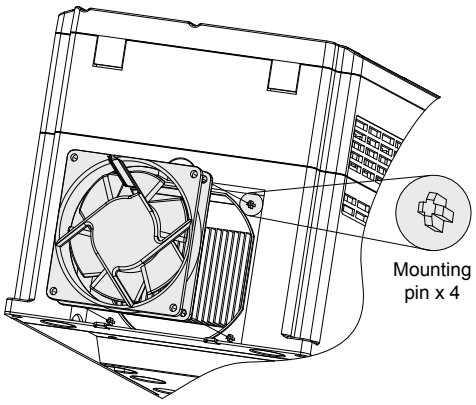

3. Insert the two guide pins into the square holes and then press in the hook.

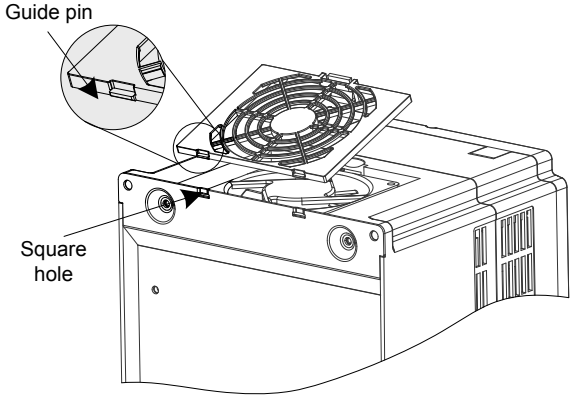

4. Keep air flow direction upward.

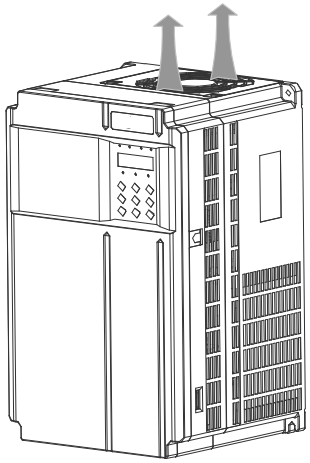

www.Farazcontrol.com واحد فروش: ۰۹۱۲۹۲۷۵۱۵۹ (مهندس رمضان زاده)

■ Removing and Installing the Fan of a Sheet Metal Housing (MD290T45G/55P to MD290T160G/200P)

Removal

1. Disconnect the fan cable from the drive

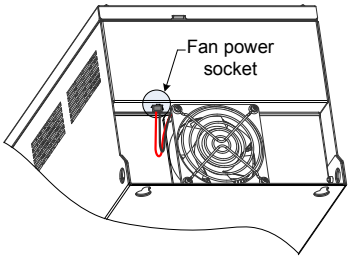

2. Remove the four screws from the drive.

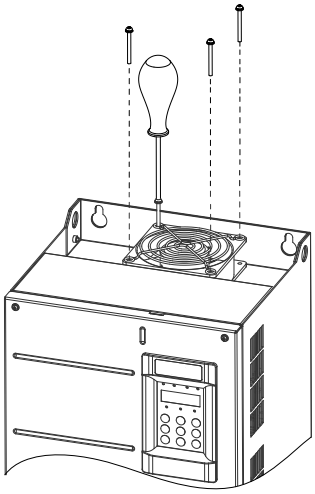

3. Remove the fan and fan cover from the drive.

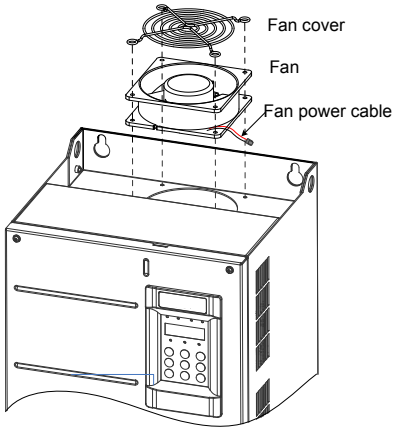

Installing

1. Align the mounting holes of the cooling fan, fan cover and the drive.
2. Install the fan and fan cover on the AC drive.
3. Fix the screws and ensure correct air flow direction.

Keep the air flow direction upward.

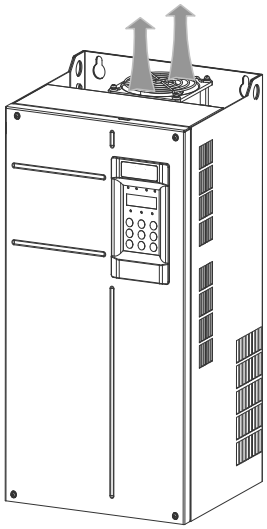

www.Farazcontrol.com واحد فروش: ۰۹۱۲۹۲۷۵۱۵۹ (مهندس رمضان زاده)

■ Removing and Installing the Fan of MD290T200G(-L) to MD290T450G(-L) and MD290T220P(-L) to MD290T500P(-L)

Removal
1. Disconnect the six screws and remove the front cover. 2. Disconnect the fan power cable connector from the drive. Each fan has a power cable connector. 3. Remove three screws from the fan box and draw the fan box out in the direction of arrow. 4. Loosen four screws from each fan cover and remove the fan.

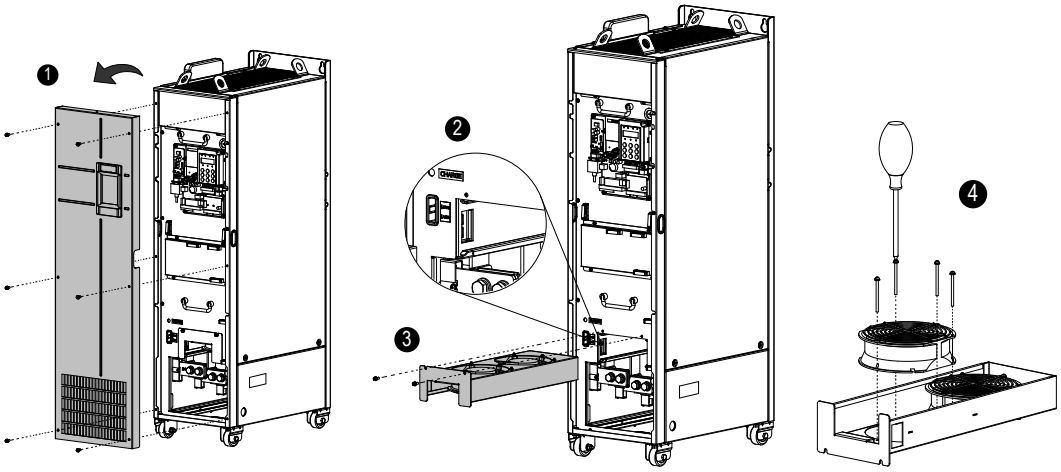

Installing
1. Put the three fans into the fan box one by one and secure them by fixing the screws. 2. Align the fan box to the rail and push it into the drive. 3. Connect the fan power cable connectors and fix the three screws. 4. After replacement is completed, check that the air flow direction is upright.

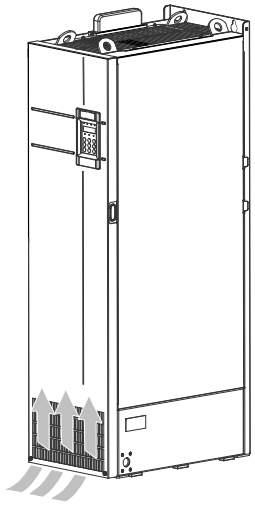

■ Replacement of Electrolytic Capacitor

If replacement of electrolytic capacitor is required, contact the agent or Inovance to perform complete drive replacement.

www.Farazcontrol.com واحد فروش: ۰۹۱۲۹۲۷۵۱۵۹ (مهندس رمضان زاده)

9.4 Storage

For storage of the AC drive, pay attention to the following three aspects:

- Pack the AC drive with original packing box provided by Inovance.
- Do not place the AC drive in an area of moisture (95% H or more) or high temperature (over 60°C) or outdoors for long time.
- The electrolytic capacitor will deteriorate after being stored for a long time. Thus, the AC drive must be switched on and off once every 2 years, each time lasting at least 5 hours. Ensure to increase the input voltage gradually to rated value by using voltage regulator.

9.5 Warranty Agreement

Free warranty only applies to the AC drive itself.

Reasonable repair expenses will be charged for the damages due to the following causes:

- Improper operation without following the instructions
- Fire, flood or abnormal voltage.
- Using the AC drive for non-recommended function
- The maintenance fee is charged according to Inovance's uniform standard. If there is an agreement, the agreement prevails.

www.Farazcontrol.com واحد فروش: ۰۹۱۲۹۲۷۵۱۵۹ (مهندس رمضان زاده)

10. Troubleshooting

10.1 Safety Information 272
10.2 Troubleshooting During Trial Run 273
10.3 Fault Display 273
10.4 Resetting Fault 274
10.5 Faults and Diagnostics 275
10.6 Symptoms and Diagnostics 282

www.Farazcontrol.com واحد فروش: ۰۹۱۲۹۲۷۵۱۵۹ (مهندس رمضان زاده)

Chapter 10 Troubleshooting

10.1 Safety Information

Safety Information	
WARNING	• Do not disconnect the AC drive while power is on, and keep all breakers in OFF state. Failure to comply may result in electric shock.
CAUTION	• Make sure to ground the AC drive according to local laws and regulations. Failure to comply may result in electric shock or a fire. • Do not remove the front cover or touch internal circuit while the power is on. Failure to comply may result in electric shock. • Do not allow unqualified personnel to perform any maintenance, inspection or part replacement work. • When installing the drive inside an enclosed cabinet, use cooling fan or air conditioner to keep temperature below 50°C. Failure to comply may result in overheating or even a fire. • Tighten all screws based on the specified tightening torque. Failure to comply may result in electric shock or a fire. • Always confirm input voltage is within nameplate rating. Failure to comply may result in electric shock or a fire. • Keep flammable and combustible materials away from the drive. • Cover the top of the drive with a temporary cloth or paper during installation so as to prevent foreign matter such as metal shavings, oil and water from falling into the drive. After the installation is completed, remove the temporary cloth or paper. • Follow proper electrostatic discharge (ESD) procedures when operating the AC drive. Failure to comply will damage internal circuit of the drive.

www.Farazcontrol.com (مهندس رمضان زاده)۰۹۱۲۹۲۷۵۱۵۹ واحد فروش:

10.2 Troubleshooting During Trial Run

This section provides solutions to oscillation, poor torque or speed response, or other problems that occur while performing a trial run.

■ Drive in V/F Control (F0-01 = 2)

It is applicable to application without an encoder for speed feedback. You need to set rated motor voltage (F1-02) and rated motor frequency (F1-04) correctly.

Problem	Solutions
Motor oscillation during running	Increase the setting of F3-11 (V/F oscillation suppression gain) by 10 gradually. The permissible maximum setting here is 100.
Overcurrent during start	Decrease the setting of F3-01 (torque boost) by 0.5% gradually.
Very large current during running	1. Set rated motor voltage (F1-02) and rated motor frequency (F1-04) correctly. 2. Decrease the setting of F3-01 (torque boost) by 0.5% gradually.
Too loud motor noise	Increase the setting of F0-15 (carrier frequency) by 1.0 kHz gradually. Note that increase in carrier frequency will result in an increase in the leakage current of the motor.
Overvoltage detected when heavy load is suddenly removed or during deceleration	1. Ensure that F3-23 (voltage limit selection) is set to 1 (enabled). Increase the setting of F3-24/F3-25 (frequency gain/voltage gain for voltage limit) by 10 gradually. The permissible maximum setting here is 100. The default value of F3-22 is 30. 2. Decrease the setting of F3-22 (voltage limit) by 10 V gradually. The permissible minimum setting here is 700 V. The default value of F3-20 is 770 V.
Overcurrent detected when heavy load is suddenly added or during acceleration	1. Increase the setting of F3-20 (current limit gain) by 10 gradually. The permissible maximum setting here is 100. The default value of F3-22 is 20. 2. Decrease the setting of F3-18 (current limit level) by 10% gradually. The permissible minimum setting here is 50%. The default value of F3-18 is 150%.

10.3 Fault Display

When a fault occurs during running, the AC drive stops output immediately, the fault indicator TUNE/TC flashes, and contact of the fault relay acts. The operation panel displays the fault code such as Err02, shown in the following figure.

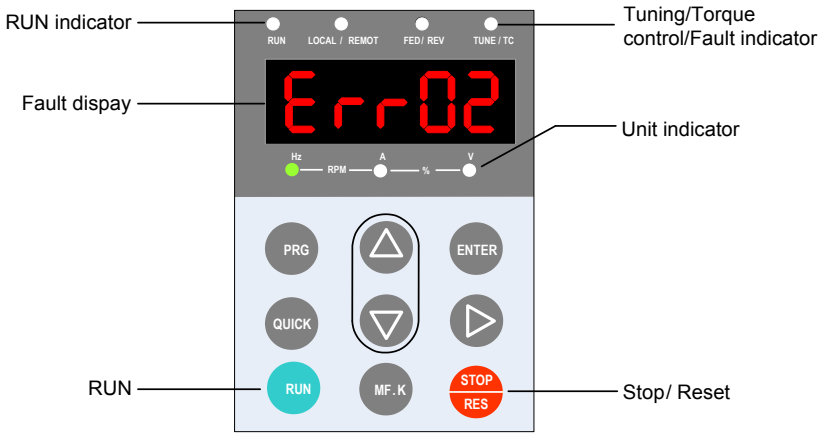

www.Farazcontrol.com واحد فروش: ۰۹۱۲۹۲۷۵۱۵۹ (مهندس رمضان زاده)

10.4 Resetting Fault

Stage	Solution	Remark
After the fault occurs	Check operating panel for detailed information of recent three faults, such as fault type and frequency, current, bus voltage, DI/DO state, accumulative power-on time and accumulative running time at occurrence of the faults.	View these information via F9-14 to F9-44.
Before the fault is reset	Find and remove cause of the fault. Then follow steps below to reset the fault.	Troubleshoot the fault according to section 11.5 "Faults and Diagnostics".
Fault resetting method	Fault resetting through a DI terminal Allocate a DI terminal with function 9 “Fault reset (RESET)” by setting any of F4-00 to F4-09 to 9.	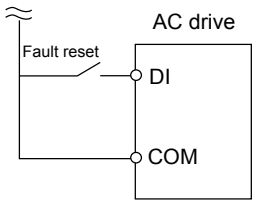
	Fault resetting via operating panel Confirm that F7-02 = 1 (default value). Then press the STOP RES key on operating panel.	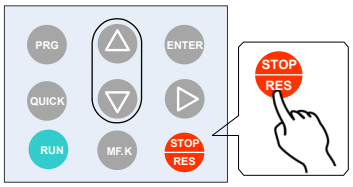
	Automatic resetting Disconnect the power supply. Until the fault code disappears, connect the power supply again.	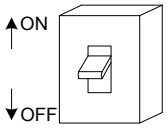
	Fault resetting via host computer Confirm that F0-02 = 2 and write "7" (fault reset) to communication address 2000H.	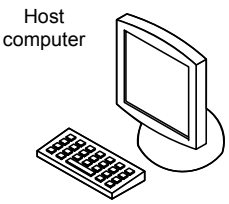

www.Farazcontrol.com واحد فروش: ۰۹۱۲۹۲۷۵۱۵۹ (مهندس رمضان زاده)

10.5 Faults and Diagnostics

Troubleshoot the fault according to the following table. If the fault cannot be eliminated, contact the agent or Inovance

Operating Panel Display	Fault Name
Err02	Overcurrent during acceleration
Cause	**Possible Solution**
Ground fault or short circuit exists in the output circuit.	Check whether short-circuit occurs on the motor, motor cable or contactor.
Motor parameters are incorrect.	Se motor parameters according to the motor nameplate correctly.
Acceleration time is too short.	Increase acceleration time.
The current limit protection parameters are set improperly.	Ensure that current limit is enabled (F3-19 = 1). The setting of current limit level (F3-18) is too large. Adjust it between 120% and 150%. The setting of current limit gain (F3-20) is too small. Adjust it between 20 and 40.
Customized torque boost or V/F curve is not appropriate.	Adjust the customized torque boost or V/F curve.
The spinning motor is started.	Enable the catching a spinning motor function or start the motor after it stops.
The AC drive suffers external interference.	View historical fault records. If the current value is far from the overcurrent level, find interference source. If external interference does not exist, it is the drive board or hall device problem.
Operating Panel Display	**Fault Name**
Err03	Overcurrent during deceleration
Cause	**Possible Solution**
Ground fault or short circuit exists in the output circuit.	Check whether short-circuit occurs on the motor, motor cable or contactor.
Motor parameters are incorrect.	Se motor parameters according to the motor nameplate correctly.
Acceleration time is too short.	Increase acceleration time.
The current limit protection parameters are set improperly.	Ensure that current limit is enabled (F3-19 = 1). The setting of current limit level (F3-18) is too large. Adjust it between 120% and 150%. The setting of the current limit gain (F3-20) is too small. Adjust it between 20 and 40.
Braking unit and braking resistor are not installed.	Install braking unit and braking resistor.
The AC drive suffers external interference.	View historical fault records. If the current value is far from the overcurrent level, find interference source. If external interference does not exist, it is the drive board or hall device problem.

www.Farazcontrol.com واحد فروش: ۰۹۱۲۹۲۷۵۱۵۹ (مهندس رمضان زاده)

Operating Panel Display	Fault Name
Err04	Overcurrent at constant speed
Cause	Possible Solution
Ground fault or short circuit exists in the output circuit.	Check whether short-circuit occurs on the motor, motor cable or contactor.
Motor parameters are incorrect.	Se motor parameters according to the motor nameplate correctly.
The current limit protection parameters are set improperly.	Ensure that current limit is enabled (F3-19 = 1). The setting of current limit level (F3-18) is too large. Adjust it between 120% and 150%. The setting of current limit gain (F3-20) is too small. Adjust it between 20 and 40.
The AC drive power class is small.	If output current exceeds rated motor current or rated output current of the AC drive during stable running, replace a drive of larger power class.
The AC drive suffers external interference.	View historical fault records. If the current value is far from the overcurrent level, find interference source. If external interference does not exist, it is the drive board or hall device problem.
Operating Panel Display	Fault Name
Err05	Overvoltage during acceleration
Cause	Possible Solution
Input voltage is too high.	Adjust input voltage to normal range.
An external force drives motor during acceleration.	Cancel the external force or install a braking resistor.
The overvoltage stall prevention parameters are set improperly.	Ensure that the voltage limit function is enabled (F3-23 = 1). The setting of voltage limit (F3-22) is too large. Adjust it between 700 V and 770 V. The setting of frequency gain for voltage limit (F3-24) is too small. Adjust it between 30 and 50.
Braking unit and braking resistor are not installed.	Install braking unit and braking resistor.
Acceleration time is too short.	Increase acceleration time.
Operating Panel Display	Fault Name
Err06	Overvoltage during deceleration
Cause	Possible Solution
The overvoltage stall prevention parameters are set improperly.	Ensure that the voltage limit function is enabled (F3-23 = 1). The setting of voltage limit (F3-22) is too large. Adjust it between 700 V and 770 V. The setting of frequency gain for voltage limit (F3-24) is too small. Adjust it between 30 and 50.
An external force drives motor during deceleration.	Cancel the external force or install braking resistor.
Deceleration time is too short.	Increase deceleration time.
Braking unit and braking resistor are not installed.	Install braking unit and braking resistor.

www.Farazcontrol.com واحد فروش: ۰۹۱۲۹۲۷۵۱۵۹ (مهندس رمضان زاده)

Operating Panel Display	Fault Name
Err07	Overvoltage at constant speed
Cause	**Possible Solution**
The overvoltage stall prevention parameters are set improperly.	Ensure that the voltage limit function is enabled (F3-23 = 1). The setting of voltage limit (F3-22) is too large. Adjust it between 700 V and 770 V. The setting of frequency gain for voltage limit (F3-24) is too small. Adjust it between 30 and 50. The setting of frequency rise threshold during voltage limit (F3-26) is too small. Adjust it between 5 Hz and 20 Hz.
An external force drives motor during running.	Cancel the external force or install a braking resistor
Operating Panel Display	**Fault Name**
Err08	Pre-charge resistor fault
Cause	**Possible Solution**
Bus voltage fluctuates around undervoltage threshold continuously.	Contact the agent or Inovance.
Operating Panel Display	**Fault Name**
Err09	Undervoltage
Cause	**Possible Solution**
Instantaneous power failure occurs	Enable the power dip ride through function (F9-59 ≠ 0).
The AC drive's input voltage is not within the permissible range.	Adjust the voltage to normal range.
The bus voltage is abnormal.	Contact the agent or Inovance.
The rectifier bridge, the buffer resistor, the drive board or the control board are abnormal.	Contact the agent or Inovance.
Operating Panel Display	**Fault Name**
Err10	AC drive overload
Cause	**Possible Solution**
Load is too heavy or locked-rotor occurs on motor.	Reduce load or check motor and mechanical conditions.
The AC drive power class is small.	Replace a drive of larger power class.
Operating Panel Display	**Fault Name**
Err11	Motor overload
Cause	**Possible Solution**
F9-01 (Motor overload protection gain) is set improperly.	Set F9-01 correctly.
Load is too heavy or locked-rotor occurs on motor.	Reduce load or check motor and mechanical conditions.

www.Farazcontrol.com واحد فروش: ۰۹۱۲۹۲۷۵۱۵۹ (مهندس رمضان زاده)

Operating Panel Display	Fault Name
Err 12	Input phase loss
Cause	**Possible Solution**
Input phase loss occurs.	Eliminate faults in external circuitry.
Drive board, lightning protection board, control board, or rectifier bridge is abnormal.	Contact the agent or Inovance.
Operating Panel Display	**Fault Name**
Err 13	Output phase loss
Cause	**Possible Solution**
Motor winding is damaged.	Check resistance between motor wires. Replace motor is winding is damaged.
The cable connecting the AC drive and the motor is abnormal.	Check for wiring errors and ensure the output cable is connected properly. Correct wiring.
The AC drive's three-phase outputs are unbalanced when the motor is running.	Check whether the motor three-phase winding is normal.
The drive board or the IGBT is abnormal.	Contact the agent or Inovance.
Operating Panel Display	**Fault Name**
Err 14	IGBT overheat
Cause	**Possible Solution**
The ambient temperature is too high.	Lower the ambient temperature.
The ventilation is clogged.	Clean the ventilation.
The fan is damaged.	Replace the cooling fan.
Thermally sensitive resistor of IGBT is damaged.	Replace the damaged thermally sensitive resistor.
The AC drive IGBT is damaged.	Replace the AC Drive IGBT.
Operating Panel Display	**Fault Name**
Err 15	External fault
Cause	**Possible Solution**
External fault signal is input via DI.	Confirm that the mechanical condition allows restart (F8-18) and reset the operation.
External fault signal is input via virtual I/O.	Confirm that the virtual I/O parameters in group A1 are set correctly and reset the operation.

www.Farazcontrol.com واحد فروش: ۰۹۱۲۹۲۷۵۱۵۹ (مهندس رمضان زاده)

Operating Panel Display	Fault Name
Err 16	Communication fault
Cause	Possible Solution
Host computer is in abnormal state.	Check the cable of host computer.
Communication cable is abnormal.	Check the communication cables.
The serial port communication protocol (F0-28) of extension communication card is set improperly.	Set F0-28 of extension communication card correctly.
Communication parameters in group Fd are set improperly.	Set communication parameters in group Fd properly.
After all the preceding checkings are done but the fault still exists, restore the default settings.	
Operating Panel Display	Fault Name
Err 17	Contactor fault
Cause	Possible Solution
Drive board and power supply are abnormal.	Replace drive board or power supply board.
Contactor is abnormal.	Replace contactor.
The lightning protection board is abnormal.	Replace the lightning protection board.
Operating Panel Display	Fault Name
Err 18	Current detection fault
Cause	Possible Solution
The hall is abnormal.	Replace the hall .
The drive board is abnormal.	Replace the drive board.
Operating Panel Display	Fault Name
Err 19	Motor auto-tuning fault
Cause	Possible Solution
Motor parameters are not set according to nameplate.	Set motor parameters correctly according to nameplate.
Motor auto-tuning times out.	Check the cable connecting AC drive and motor.

www.Farazcontrol.com (مهندس رمضان زاده)۰۹۱۲۹۲۷۵۱۵۹ واحد فروش:

Operating Panel Display	Fault Name
Err21	EEPROM read-write fault
Cause	Possible Solution
The EEPROM chip is damaged.	Replace the main control board.
Operating Panel Display	Fault Name
Err23	Short circuit to ground
Cause	Possible Solution
Motor is short circuited to the ground.	Replace cable or motor.
Operating Panel Display	Fault Name
Err26	Accumulative running time reached
Cause	Possible Solution
Accumulative running time reaches the setting value.	Clear the record through parameter initialization.
Operating Panel Display	Fault Name
Err27	User-defined fault 1
Cause	Possible Solution
User-defined fault 1 is input via DI.	Reset the operation.
User-defined fault 1 is input via virtual I/O.	Reset the operation.
Operating Panel Display	Fault Name
Err28	User-defined fault 2
Cause	Possible Solution
User-defined fault 2 is input via DI.	Reset the operation.
User-defined fault 2 is input via virtual I/O.	Reset the operation.
Operating Panel Display	Fault Name
Err29	Accumulative power-on time reached
Cause	Possible Solution
Accumulative power-on time reaches the setting value.	Clear the record through parameter initialization.
Operating Panel Display	Fault Name
Err30	Load loss
Cause	Possible Solution
The output current of AC drive is smaller than F9-64 (load loss detection level).	Check whether load is disconnected or the setting of F9-64 and F9-65 (load lost detection time) satisfies actual running condition.
Operating Panel Display	Fault Name
Err31	PID feedback lost during running
Cause	Possible Solution
PID feedback is smaller than the setting value of FA-26 (detection level of PID feedback loss).	Check PID feedback or set FA-26 properly.

www.Farazcontrol.com (مهندس رمضان زاده)۰۹۱۲۹۲۷۵۱۵۹ واحد فروش:

Operating Panel Display	Operating Panel Display
Err40	Pulse-by-pulse current limit fault
Cause	Cause
Load is too heavy or locked-rotor occurs on motor.	Reduce load or check motor and mechanical conditions.
The AC drive power class is small.	Replace a drive of larger power class.
Operating Panel Display	Fault Name
Err41	Motor switchover fault during running
Cause	Possible Solution
Motor switchover via terminal during drive running of the AC drive.	Perform motor switchover after the AC drive stops.
Operating Panel Display	Fault Name
Err45	Motor overtemperature.
Cause	Possible Solution
Cable connection of temperature sensor becomes loose	Check cable connection of temperature sensor.
The motor temperature is too high.	Decrease carrier frequency or take other measures to cool the motor.
Operating Panel Display	Fault Name
Err61	Braking unit overload
Cause	Possible Solution
Resistance of braking resistor is too small.	Replace a braking resistor of larger resistance.
Operating Panel Display	Fault Name
Err62	Short-circuit of braking circuit
Cause	Possible Solution
Braking IGBT is abnormal.	Contact the agent or Inovance.

www.Farazcontrol.com (مهندس رمضان زاده)۰۹۱۲۹۲۷۵۱۵۹ :واحد فروش

10.6 Symptoms and Diagnostics

The following symptoms may occur during use of the AC drive. When these symptoms occur, perform simple analysis based on the following table.

Operating Panel Display	Fault Description
	There is no display while power-on.
Cause	**Possible Solution**
The mains voltage is not input or too low.	Check the power supply.
The switching power supply on drive board of the AC drive is faulty.	Check bus voltage. Check that the 24V output and +10V output on the control board are normal.
Wires between control board and drive board and between control board and operating panel break.	Re-connect the 8-pin wire and 40-pin wire.
Pre-charge resistor of the AC drive is damaged.	Contact the agent or Inovance.
Control board or operating panel is faulty.	
Rectifier bridge is damaged.	
Operating Panel Display	**Fault Description**
HC	"HC" is displayed while power-on.
Cause	**Possible Solution**
Wire between drive board and control board is in poor contact.	Re-connect the 8-pin wire and 28-pin wire.
Related components on control board are damaged	Contact the agent or Inovance.
The motor or motor cable is short circuited to ground.	
The hall is damaged.	
The mains voltage is too low.	
Operating Panel Display	**Fault Description**
Err23	"Err23" is displayed at power-on.
Cause	**Possible Solution**
Motor or motor output cable is short circuited to ground.	Use a megger to measure insulation resistance of motor and motor cable.
The AC drive is damaged.	Contact the agent or Inovance.
Operating Panel Display	**Fault Description**
HC	The display is normal while power-on. But after running, “HC” is displayed and the drive stops immediately.
Cause	**Possible Solution**
The cooling fan is damaged or locked-rotor occurs.	Replace the fan.
Short circuit exists in wiring of control terminals.	Eliminate short circuit fault in control circuit wiring.
Operating Panel Display	**Fault Description**
Err 14	Err14 (IGBT overheat) is detected frequently.
Cause	**Possible Solution**
The setting of carrier frequency is too high.	Reduce carrier frequency (F0-15).
The cooling fan is damaged, or ventilation is clogged.	Replace the fan or clean the ventilation.
Components inside the AC drive are damaged (thermistor or others).	Contact the agent or Inovance.

www.Farazcontrol.com واحد فروش: ۰۹۱۲۹۲۷۵۱۵۹ (مهندس رمضان زاده)

Operating Panel Display	Fault Description
-	The motor does not rotate after the AC drive runs.
Cause	Possible Solution
It is motor or motor cable problem.	Check that wiring between AC drive and motor is normal.
Related AC drive and motor parameters are set improperly.	Restore the factory parameters and re-set the following parameters properly: Encoder parameters Motor ratings, such as rate motor frequency and rated motor speed Motor 1 control mode (F0-01) and command source selection (F0-02) F3-01 (torque boost) in V/F control under heavy-load start.
Cable connection between drive board and control board is in poor contact.	Re-connect wirings and ensure secure connection.
The drive board is faulty.	Contact the agent or Inovance.
Operating Panel Display	Fault Description
-	DI terminals are disabled.
Cause	Possible Solution
Related parameters are set incorrectly.	Check and set parameters in group F4 again.
External signals are incorrect.	Re-connect external signal cables.
Jumper across OP and +24 V becomes loose.	Re-confirm the jumper bar across OP and +24 V.
The control board is faulty.	Contact the agent or Inovance.
Operating Panel Display	Fault Description
Operating Panel Display	Fault Description
-	The AC drive detects overcurrent and overvoltage frequently.
Cause	Possible Solution
Motor parameters are set improperly.	Set motor parameters or perform motor auto-tuning again.
Acceleration/deceleration time is improper.	Set proper acceleration/deceleration time.
Load fluctuates.	Contact the agent or Inovance.
Operating Panel Display	Fault Description
	Err17 is detected upon power-on or running.
Cause	Possible Solution
The pre-charge relay or contactor is not closed.	Check whether the relay or contactor cable is loose.
	Check whether the relay or contactor is faulty.
	Check whether 24 V power supply of the contactor is faulty.
	Contact the agent or Inovance.
Operating Panel Display	Fault Description
-	The motor coasts to stop or does not have braking capacity during deceleration or deceleration to stop
Cause	Possible Solution
Voltage limit is enabled.	If braking resistor has been configured, it is necessary to set F3-23 = 0 to disable the voltage limit function.

www.Farazcontrol.com واحد فروش: ۰۹۱۲۹۲۷۵۱۵۹ (مهندس رمضان زاده)

www.Farazcontrol.com واحد فروش: ۰۹۱۲۹۲۷۵۱۵۹ (مهندس رمضان زاده)



Appendix

Appendix A Standards Compliance 286

A.1 CE 286

A.2 UL Certification 305

Appendix B Parameter Table 306

B.1 Introduction 306

B.2 Standard Parameters 307

B.3 Monitoring Function Codes 342

www.Farazcontrol.com واحد فروش: ۰۹۱۲۹۲۷۵۱۵۹ (مهندس رمضان زاده)

Appendix A Standards Compliance

A.1 CE

A.1.1 CE Mark

CE mark indicates compliance with European safety and environmental regulations. It is required for engaging in business and commerce in Europe.

European standards include the Machinery Directive for machine manufacturers, the Low Voltage Directive for electronics manufacturers, and EMC guidelines for controlling noise.

This drive is marked with CE mark based on the following EMC guidelines and the Low Voltage Directive.

- 2014/35/EU: Low Voltage Directive
- 2014/30/EU: Electromagnetic compatibility

Machines and devices used in combination with this drive must also be CE certified and marked. The integrator who integrates the drive with the CE mark in into other devices has the responsibility of ensuring compliance with CE standards and verifying that conditions meet European standards.

A.1.2 CE Low Voltage Directive Compliance

This drive has been tested according to IEC 61800-5-1: 2007, and it complies with the Low Voltage Directive completely.

To enable machines and devices integrating this drive to comply with the Low Voltage Directive, be sure to meet the following conditions:

■ Mounting Location

Mount the AC drive in places with Pollution Degree 2 and overvoltage category 3 in accordance with IEC60664.

www.Farazcontrol.com (مهندس رمضان زاده)۰۹۱۲۹۲۷۵۱۵۹ واحد فروش:

■ Installing Fuse on the Input Side

To prevent accidents caused by short circuit, install fuse on the input side and the fuse must comply with the UL standard.

Select the fuse according to the following figure.

Model		FWH Series Fuse	
		Manufacturer: Bussmann	
		Rated Current (A)	Model
MD290T18.5G/22P		80	FWH-80B
MD290T22G/30P		100	FWH-100B
MD290T30G/37P		100	FWH-100B
MD290T37G/45P		125	FWH-125B
MD290T45G/55P		150	FWH-150B
MD290T55G/75P		200	FWH-200B
MD290T75G/90P		250	FWH-250B
MD290T90G/110P		275	FWH-275B
MD290T110G/132P		325	FWH-325B
MD290T132G/160P		400	FWH-400B
MD290T160G/200P		500	FWH-500B
MD290T200G(-L)	MD290T220P(-L)	600	FWH-600B
MD290T250P(-L)	-	600	FWH-600B
MD290T220G(-L)	MD290T280P(-L)	700	FWH-700B
MD290T250G(-L)	MD290T315P(-L)	800	FWH-800B
MD290T280G(-L)	MD290T355P(-L)	800	FWH-800B
MD290T315G(-L)	MD290T400P(-L)	1000	170M5016
MD290T355G(-L)	MD290T450P(-L)	1000	170M5016
MD290T400G(-L)	MD290T500P(-L)	1400	170M6017
MD290T450G(-L)	-	1400	170M6017

■ Preventing Entry of Foreign Objects

The drive units must be installed in a fireproof cabinet with doors that provide effective electrical and mechanical protection. The installation must conform to local and regional laws and regulations, and to relevant IEC requirements.

■ Grounding

If using an AC drive of the 400 V class, tie the neutral point of the drive power supply to ground.

www.Farazcontrol.com (مهندس رمضان زاده)۰۹۱۲۹۲۷۵۱۵۹ واحد فروش:

A.1.3 EMC Guidelines Compliance

Electromagnetic compatibility (EMC) describes the ability of electronic and electrical devices or systems to work properly in the electromagnetic environment and not to generate electromagnetic interference that influences other local devices or systems.

In other words, EMC includes two aspects: The electromagnetic interference generated by a device or system must be restricted within a certain limit; the device or system must have sufficient immunity to the electromagnetic interference in the environment.

The drive satisfies the European EMC directive 2004/108/EC and the standard EN 61800-3: 2004 +A1: 2012 Category C2. The AC drives are applied to both the first environment and the second environment.



When applied in the first environment, the AC drive may generate radio interference. Besides the CE compliance described in this chapter, take measures to avoid the radio interference if required.

The integrator of the system installed with the AC drive is responsible for compliance of the system with the European EMC directive and standard EN 61800-3: 2004 +A1: 2012 Category C2, C3 or C4 according to the system application environment.

A.1.4 Definition of Terms

- First environment

  Environment that includes domestic premises, it also includes establishments directly connected without intermediate transformers to a low-voltage power supply network which supplies buildings used for domestic purposes.

- Second environment

  Environment that includes all establishments other than those directly connected to a low-voltage power supply network which supplies buildings used for domestic purposes

- Category C1 AC drive

  Power Drive System (PDS) of rated voltage less than 1000 V, intended for use in the first environment

- Category C2 AC drive

  PDS of rated voltage less than 1 000 V, which is neither a plug in device nor a movable device and, when used in the first environment, is intended to be installed and commissioned only by a professional person.

- Category C3 AC drive

  PDS of rated voltage less than 1 000 V, intended for use in the second environment and not intended for use in the first environment

- Category C4 AC drive

  PDS of rated voltage equal to or above 1 000 V, or rated current equal to or above 400 A, or intended for use in complex systems in the second environment

www.Farazcontrol.com واحد فروش: ۰۹۱۲۹۲۷۵۱۵۹ (مهندس رمضان زاده)

A.1.5 Selection of Peripheral EMC Devices

■ AC Input Filter Installation

Note	Select a cable as short as possible to connect filter and drive. Cable length must be less than 30 cm. Make sure to connect filter and drive to the same grounding reference surface to implement reliable grounding of the filter. Otherwise, desired filtering effect will not be achieved.

- Standard EMC filter

  This series filters satisfy the EN 61800-3 C2 emission requirement of CE certification. Connect filter to ground reliably and ensure that length of the cable connecting drive and filter is less than 30 cm.

  – Physical appearance



Schaffner FN3258 series filter



Schaffner FN3359 series filter



Changzhou Jianli EBK5 series filter

  – Selection

MD290 Model		Input AC Filter Model (Schaffner)	Input AC Filter Model (Changzhou Jianli)
MD290T18.5GB/22P		FN 3258-55-34	DL-50EBK5
MD290T22GB/30P		FN 3258-75-34	DL-65EBK5
MD290T30GB/37P		FN 3258-75-34	DL-65EBK5
MD290T37GB/45P		FN 3258-100-35	DL-80EBK5
MD290T45GB/55P		FN 3258-100-35	DL-100EBK5
MD290T55GB/75P		FN 3258-130-35	DL-130EBK5
MD290T75GB/90P		FN 3258-180-40	DL-160EBK5
MD290T90G/110P		FN 3258-180-40	DL-200EBK5
MD290T110G/132P		FN 3270H-250-99	DL-250EBK5
MD290T132G/160P		FN 3359-250-28	DL-300EBK3
MD290T160G/200P		FN 3359-320-99	DL-400EBK3
MD290T200G(-L)	MD290T220P(-L)	FN 3359-400-99	DL-400EBK3
MD290T250P(-L)	-		
MD290T220G(-L)	MD290T280P(-L)	FN 3359-600-99	DL-600EBK3
MD290T250G(-L)	MD290T315P(-L)	FN 3359-600-99	DL-600EBK3
MD290T280G(-L)	MD290T355P(-L)	FN 3359-600-99	DL-600EBK3
MD290T315G(-L)	MD290T400P(-L)	FN 3359-600-99	DL-600EBK3
MD290T355G(-L)	MD290T450P(-L)	FN 3359-800-99	DL-700EBK3
MD290T400G(-L)	MD290T500P(-L)	FN 3359-800-99	DL-800EBK3
MD290T450G(-L)	-	FN 3359-800-99	DL-800EBK3

www.Farazcontrol.com واحد فروش: ۰۹۱۲۹۲۷۵۱۵۹ (مهندس رمضان زاده)

– Mounting Dimensions

Dimensions of Schaffner FN 3258 series 50-180A filter

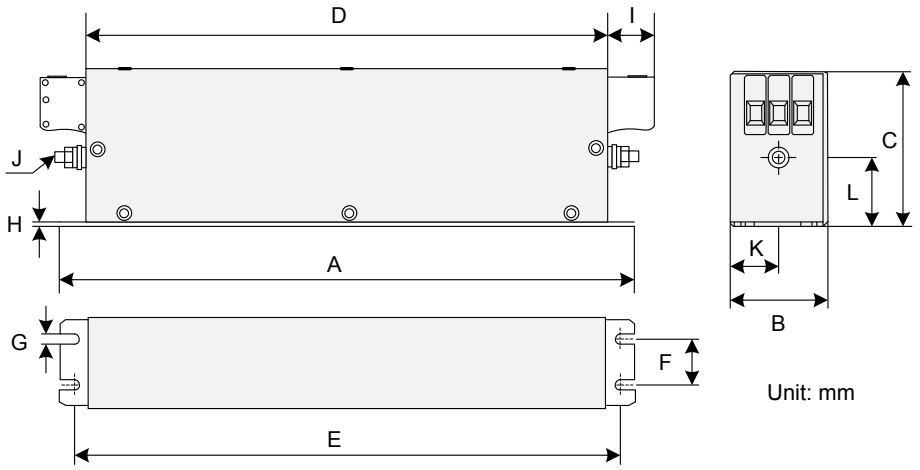

Rated Current (A)	A	B	C	D	E	F	G	H	I	J	K	L
7	190	40	70	160	180	20	4.5	1	22	M5	20	29.5
16	250	45	70	220	235	25	5.4	1	22	M5	22.5	29.5
30	270	50	85	240	255	30	5.4	1	25	M5	25	39.5
42	310	50	85	280	295	30	5.4	1	25	M6	25	37.5
55	250	85	90	220	235	60	5.4	1	39	M6	42.5	26.5
75	270	80	135	240	255	60	6.5	1.5	39	M6	40	70.5
100	270	90	150	240	255	65	6.5	1.5	45	M10	45	64
130	270	90	150	240	255	65	6.5	1.5	45	M10	45	64
180	380	120	170	350	365	102	6.5	1.5	51	M10	60	47

www.Farazcontrol.com واحد فروش: ۰۹۱۲۹۲۷۵۱۵۹ (مهندس رمضان زاده)

Dimensions of Schaffner FN 3270H series 150-2500A filter

150 to 250 A

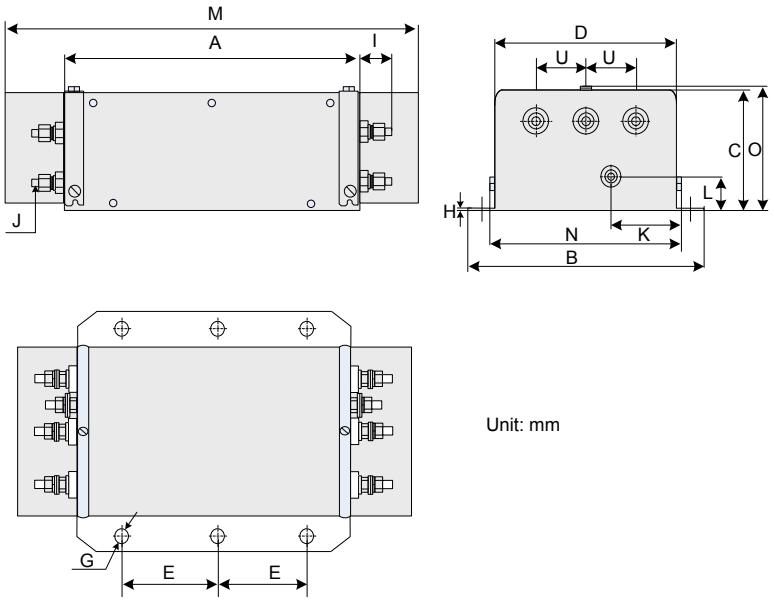

Unit: mm

320 to 2500 A

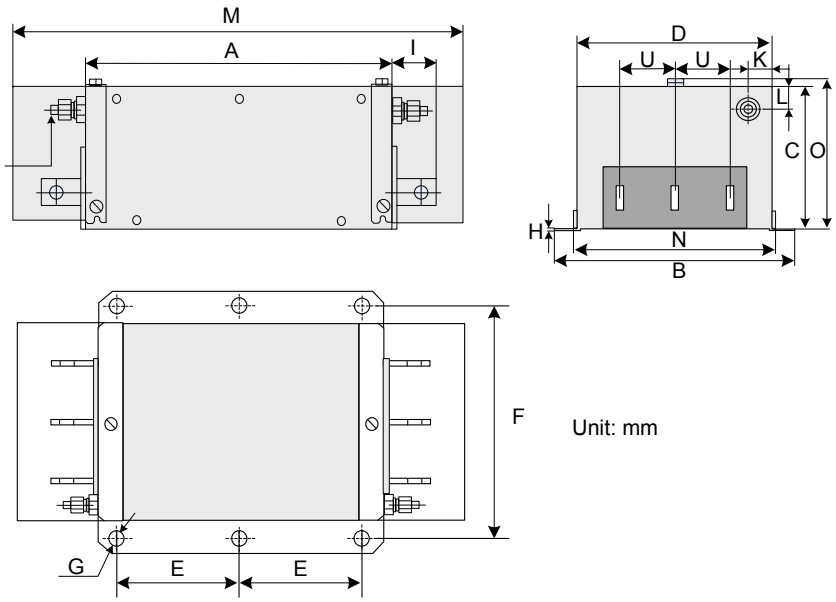

Unit: mm

Dimensions of copper bar

320 to 1000 A

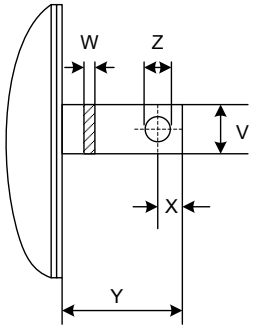

www.Farazcontrol.com واحد فروش: ۰۹۱۲۹۲۷۵۱۵۹ (مهندس رمضان زاده)

Dimensions	150A	180A	250A	320A	400A	600A	800A	1000A	1600A	2500A
	(mm)									
A	300	300	300	300	300	300	350	350	400	600
B	210	210	230	260	260	260	280	280	300	370
C	120	120	125	115	115	135	170	170	160	200
D	160	160	180	210	210	210	230	230	250	300
E	120	120	120	120	120	120	145	145	170	250
F	185	185	205	235	235	235	255	255	275	330
G	Φ12	Φ12	Φ12	Φ12	Φ12	Φ12	Φ12	Φ12	Φ12	Φ14
H	2	2	2	2	2	2	3	3	3	3
I	33	33	33	43	43	43	53	53	93	98
J	M10	M10	M10	M12	M12	M12	M12	M12	M12	M16
K	55	55	62.5	20	20	20	25	25	25	25
L	30	30	35	20	20	20	25	25	25	25
M	420	420	420	440	440	440	510	510	-	-
N	171	171	191	221	221	221	241	241	-	-
O	127	127	132	122	122	142	177	177	-	-
S	-	-	-	-	-	-	-	-	26	35
T	-	-	-	-	-	-	-	-	26	35
U	50	50	55	60	60	60	60	60	60	100
V	-	-	-	25	25	25	40	40	60	70
W	-	-	-	6	6	8	8	8	10	15
X	-	-	-	15	15	15	20	20	17	20
Y	-	-	-	40	40	40	50	50	90	95
Z	-	-	-	Φ10.5	Φ10.5	Φ10.5	Φ14	Φ14	Φ14	Φ14

www.Farazcontrol.com واحد فروش: ۰۹۱۲۹۲۷۵۱۵۹ (مهندس رمضان زاده)

Dimensions of Jianli series 50-200A filter

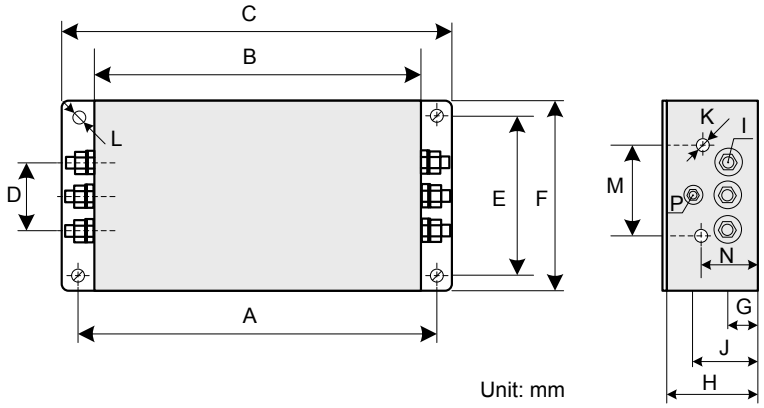

Filter Model	A	B	C	D	E	F	G	H	I	J	K	M	N	P	L
	(mm)														
DL-25EBK5	243	224	265	58	70	102	25	92	M6	58	M4	74	49	M6	6.4 x 9.4
DL-35EBK5															
DL-50EBK5															
DL-65EBK5															
DL-80EBK5	354	323	388	66	155	188	30	92	M8	62	M4	86	56	M8	6.4 x 9.4
DL-100EBK5															
DL-130EBK5															
DL-160EBK5															
DL-200EBK5															

Dimensions of the Jianli series 250-800A filter

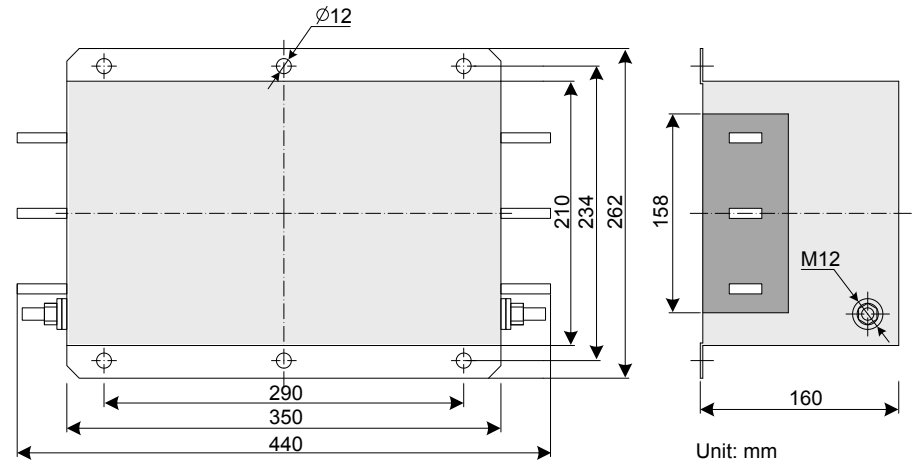

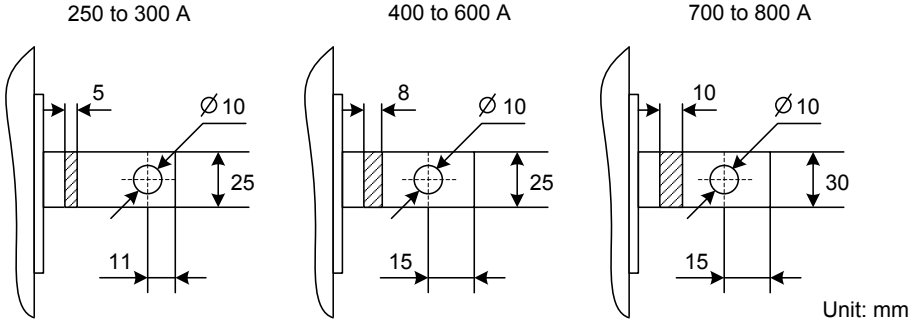

www.Farazcontrol.com واحد فروش: ۰۹۱۲۹۲۷۵۱۵۹ (مهندس رمضان زاده)

- Simple EMC Filter

  A simple EMC filter is installed to prevent the surrounding interference and prevent the interference from the AC drive during running.

  Connect the simple EMC filter to ground reliably and ensure that the length of the cable connecting the drive and the filter is less than 30 cm.

  – Selection

MD290 Model	Simple EMC filter
MD290T18.5G/22P	DL65EB1/10
MD290T22G/30P	
MD290T30G/37P	
MD290T37G/45P	DL-120EB1/10
MD290T45G/55P	
MD290T55G/75P	DL-180EB1/10
MD290T75G/90P	
MD290T90G/110P to MD290T450G(-L)	Unavailable

  – Mounting Dimensions

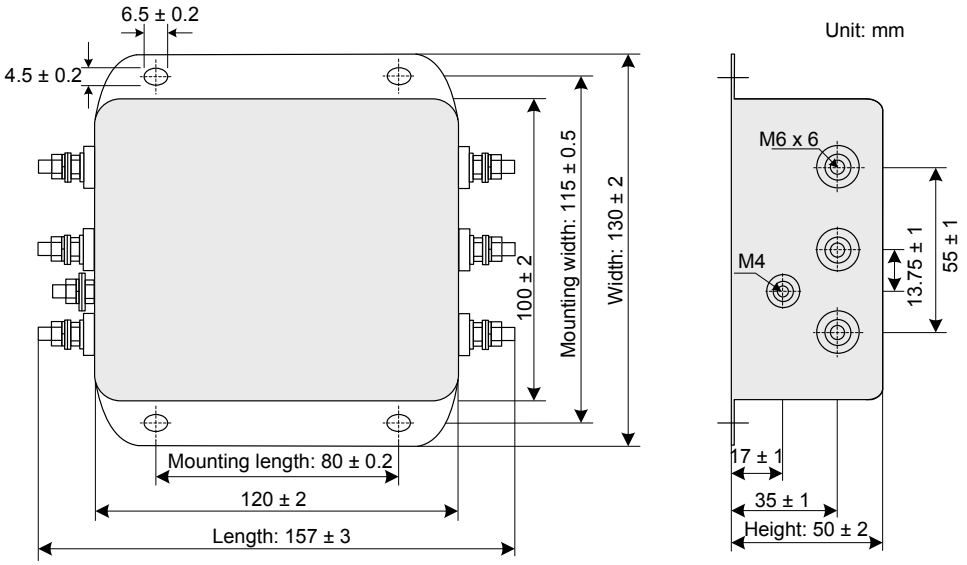

Simple EMC Filter Model	Overall Dimensions (Length x Width x Height)	Mounting Dimensions (Mounting Length x Mounting Width) (mm)
DL-15EB1/10	157 x 130 x 50	80 x 115
DL-35EB1/10	218 x 140 x 80	184 x 112
DL-65EB1/10	218 x 140 x 80	184 x 112
DL-120EB1/10	334 x 185 x 90	304 x 155
DL-180EB1/10	388 x 220 x 100	354 x 190

www.Farazcontrol.com واحد فروش: ۰۹۱۲۹۲۷۵۱۵۹ (مهندس رمضان زاده)

- Filter Capacitance Box and Ferrite Core

  In some applications, connect safety capacitance box and wind a ferrite core to remove some interference during drive running.

  Connect safety capacitance box to grounding terminal of the drive, and ground cable length cannot exceed 300 mm.

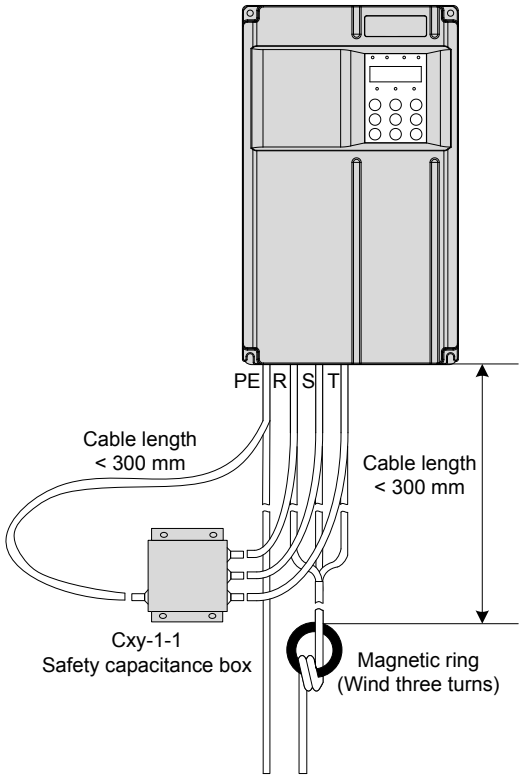

– Mounting dimensions of safety capacitance box

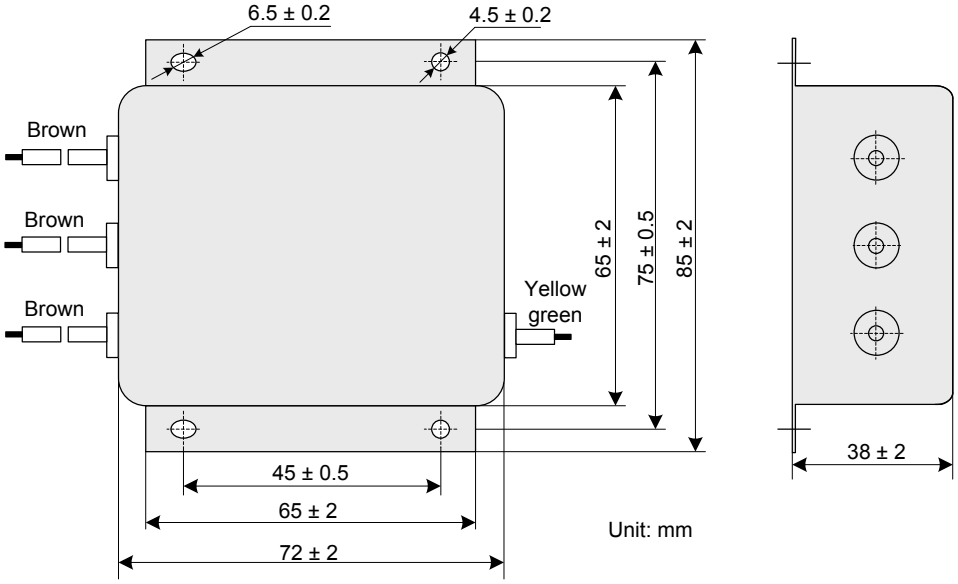

Safety Capacitance Box Model	SN	Overall Dimensions (Length x Width x Height)	Mounting Dimensions (Mounting Length x Mounting Width) (mm)
Cxy-1-1	11025018	85 x 72 x 38	45 x 75

www.Farazcontrol.com واحد فروش: ۰۹۱۲۹۲۷۵۱۵۹ (مهندس رمضان زاده)

– Physical appearance of ferrite core



– Selection of ferrite core

Ferrite Core Model	SN	Dimensions (Outer Diameter x Inner Diameter x Thickness) (mm)
DY644020H	11013031	64 x 40 x 20
DY805020H	11013032	80 x 50 x 20
DY1207030H	11013033	120 x 70 x 30

■ AC input reactor installation

- AC Reactor Model

The AC input reactor is connected to suppress harmonic current on the input side. Install an AC reactor when the application has higher requirements on harmonic suppression.

The recommended AC reactor models are listed in the following table.

AC Drive Model		AC Reactor Model (Inovance)
MD290T18.5GB/22P		MD-ACL-50-0.28-4T-2%
MD290T22GB/30P		MD-ACL-60-0.24-4T-2%
MD290T30GB/37P		MD-ACL-90-0.16-4T-2%
MD290T37GB/45P		MD-ACL-90-0.16-4T-2%
MD290T45GB/55P		MD-ACL-120-0.12-4T-2%
MD290T55GB/75P		MD-ACL-150-0.095-4T-2%
MD290T75GB/90P		MD-ACL-200-0.07-4T-2%
MD290T90G/110P		MMD-ACL-250-0.056-4T-2%
MD290T110G/132P		MD-ACL-250-0.056-4T-2%
MD290T132G/160P		MD-ACL-330-0.042-4T-2%
MD290T160G/200P		MD-ACL-330-0.042-4T-2%
MD290T200G(-L)	MD290T220P(-L)	MD-ACL-490-0.028-4T-2%
MD290T250P(-L)	-	MD-ACL-490-0.028-4T-2%
MD290T220G(-L)	MD290T280P(-L)	MD-ACL-490-0.028-4T-2%
MD290T250G(-L)	MD290T315P(-L)	MD-ACL-490-0.028-4T-2%
MD290T355P(-L)	MD290T355P(-L)	MD-ACL-660-0.021-4T-2%
MD290T315G(-L)	MD290T400P(-L)	MD-ACL-660-0.021-4T-2%
MD290T355G(-L)	MD290T450P(-L)	MD-ACL-800-0.017-4T-2%
MD290T400G(-L)	MD290T500P(-L)	MD-ACL-800-0.017-4T-2%
MD290T450G(-L)		MD-ACL-1000-0.014-4T-2%

www.Farazcontrol.com واحد فروش: ۰۹۱۲۹۲۷۵۱۵۹ (مهندس رمضان زاده)

- Mounting dimensions

  Dimensions of AC output reactor of 50 to 120 A are shown as below:

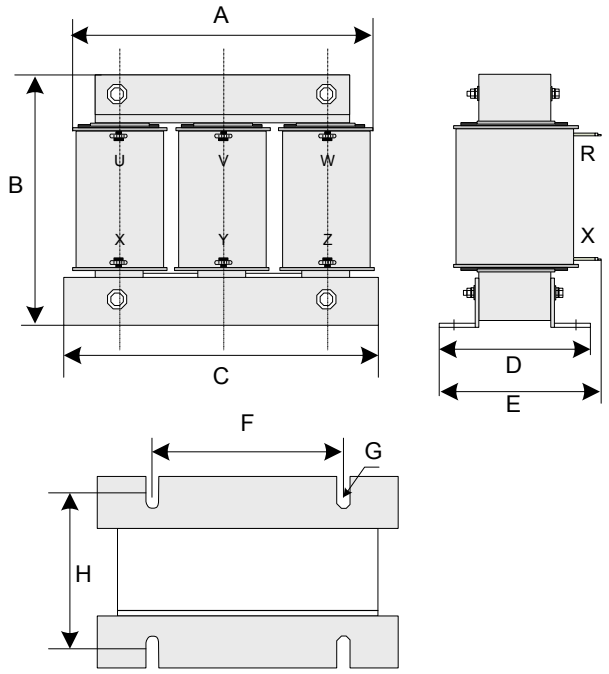

Rated Current	A	B	C	D	E	F	G	H
(A)	(mm)							
50	155	130	148	95	135	95	6 x 15	80
60	195	165	188	92	130	120	8.5 x 20	72
80	195	165	188	92	130	120	8.5 x 20	72
90	195	165	188	92	130	120	8.5 x 20	72
120	195	165	188	112	140	120	8.5 x 20	92

Dimensions of AC output reactor of 150 to 250 A are shown as below:

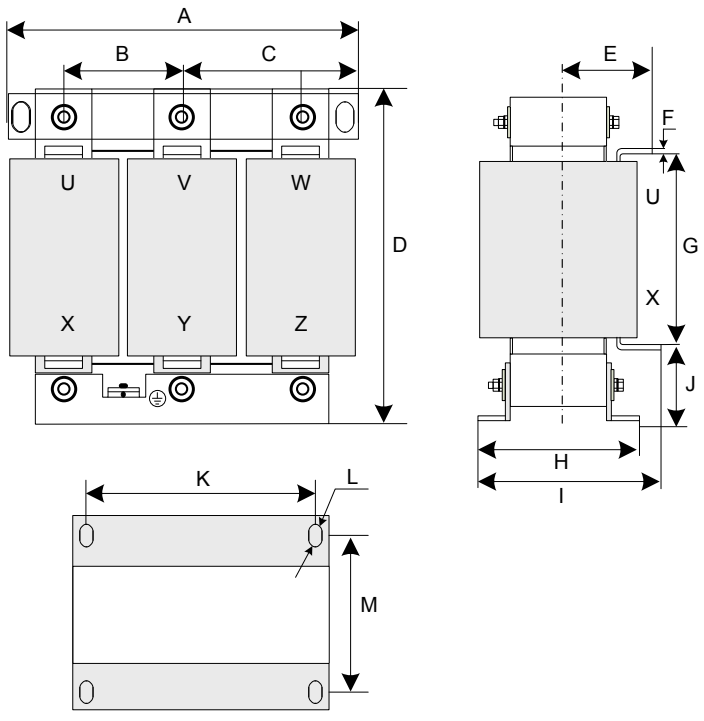

www.Farazcontrol.com واحد فروش: ۰۹۱۲۹۲۷۵۱۵۹ (مهندس رمضان زاده)

Rated Current	A	B	C	D	E	F	G	H	I	J	K	L	M
A	mm												
150	250	81	81	230	97	5	140	113	170	42	182	11 x 18	87
200	250	81	81	230	102	5	140	123	175	42	182	11 x 18	97
250	250	81	81	230	102	5	140	123	175	42	182	11 x 18	97

Dimension of AC output reactor of 330 A

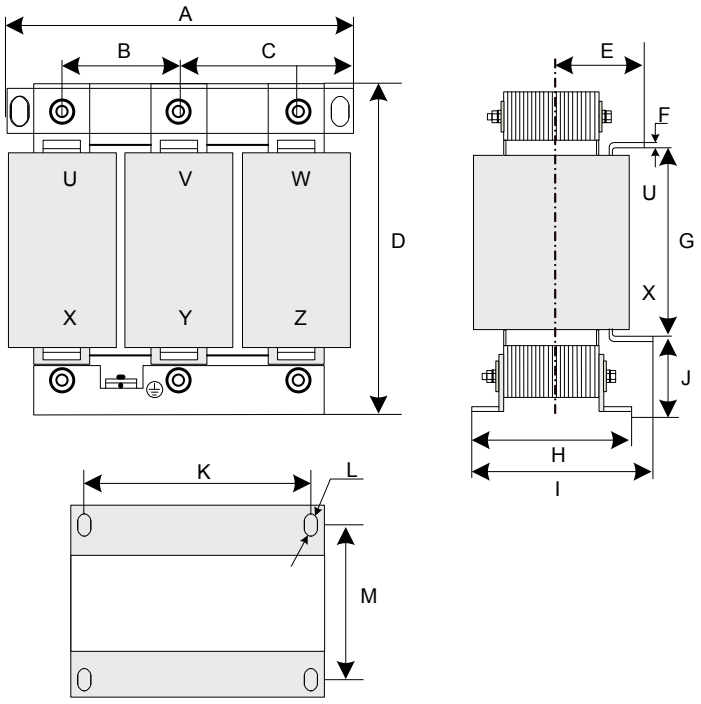

Rated Current	A	B	C	D	E	F	G	H	I	J	K	L	M
(A)	(mm)												
330	290	95	95	250	110	5	155	132	190	45	214	11 x18	106

Note	The dimensions of the AC input and output reactors are for reference only.

www.Farazcontrol.com واحد فروش: ۰۹۱۲۹۲۷۵۱۵۹ (مهندس رمضان زاده)

■ dv/dt Reactor Installation

Connect a dv/dt reactor on the output side to reduce large dv/dt, protecting the motor winding from insulation breakdown, lowering motor temperature and extending the motor service life and meanwhile reduce interference on surrounding devices.

- Selection of the dv/dt reactor (Schaffner)

AC Drive Model	dv/dt Reactor Model	Rated Current at 40°C (A)	Rated Motor Power (kW)	Rated Inducance (mH)	Power Consum-ption (W)	I/O Terminal Selection			Total (kg)
									
MD290T18.5GB/22P	RWK 305-45-KL	45	18.5	0.131	60	KL	-	-	6.1
MD290T22GB/30P	RWK 305-45-KL	45	22	0.131	60	KL	-	-	6.1
MD290T30GB/37P	RWK 305-60-KL	60	30	0.098	65	KL	-	-	6.1
MD290T37GB/45P	RWK 305-72-KL	72	37	0.082	70	KL	-	-	6.1
MD290T45GB/55P	RWK 305-90-KL	90	45	0.065	75	KL	-	-	7.4
MD290T55GB/75P	RWK 305-110-KL	110	55	0.053	90	KL	-	-	8.2
MD290T75GB/90P	RWK 305-156-KS	156	75	0.038	120	-	KS	-	10.7
MD290T90G/110P	RWK 305-182-KS	182	90	0.032	140	-	KS	-	16
MD290T110G/132P	RWK 305-230-KS	230	110	0.026	180	-	KS	-	22
MD290T132G/160P	RWK 305-280-KS	280	132	0.021	220	-	KS	-	29
MD290T160G/200P	RWK 305-330-KS	330	160	0.018	240	-	KS	-	32
MD290T200G(-L)	RWK 305-400-S	400	200	0.015	330	-	-	S	34
MD290T220P(-L)									
MD290T250P(-L)									
MD290T220G(-L)	RWK 305-500-S	500	220	0.012	340	-	-	S	35
MD290T280P(-L)									
MD290T250G(-L)	RWK 305-500-S	500	250	0.012	340	-	-	S	35
MD290T315P(-L)									
MD290T280G(-L)	RWK 305-600-S	600	280	0.01	380	-	-	S	37
MD290T355P(-L)									
MD290T315G(-L)	RWK 305-600-S	600	315	0.01	380	-	-	S	37
MD290T400P(-L)									
MD290T355G(-L)	RWK 305-680-S	680	355	0.009	410	-	-	S	38
MD290T450P(-L)									
MD290T400G(-L)	RWK 305-790-S	790	400	0.007	590	-	-	S	43
MD290T500P(-L)									
MD290T450G(-L)	RWK 305-910-S	910	450	0.006	740	-	-	S	49

www.Farazcontrol.com واحد فروش: ۰۹۱۲۹۲۷۵۱۵۹ (مهندس رمضان زاده)

- Mounting Dimensions (Unit: mm)

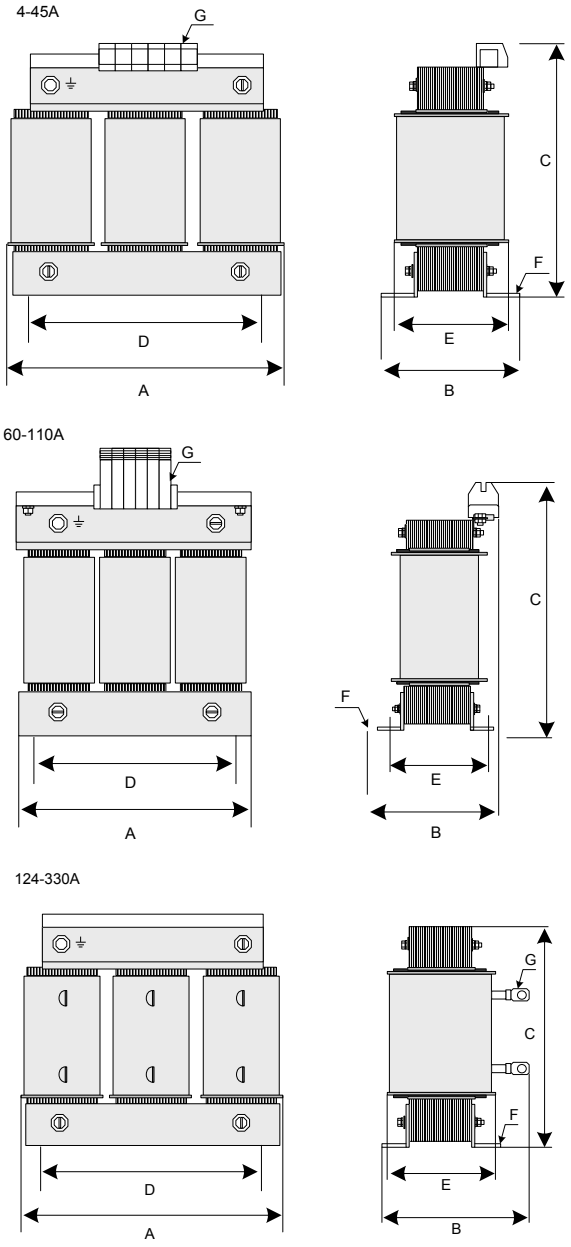

Reactor Series	A (mm)	B (mm)	C (mm)	D (mm)	E (mm)	F (mm)	G
4 and 7.8A	100	max.60	max.115	56	34	4.8 x 9	2.5 mm^2
10A	100	max.70	max.115	56	43	4.8 x 9	2.5 mm^2
14A	125	max.70	max.135	100	45	5 x 8	2.5 mm^2
17A	125	max.75	max.135	100	55	5 x 8	2.5 mm^2
24A	125	max.75	max.135	100	55	5 x 8	4 mm^2
32A	155	max.95	max.170	130	56	8 x 12	10 mm^2
45A	155	max.110	max.190	130	72	8 x 12	10 mm^2
60 and 72A	155	max.125	max.190	130	70	8 x 12	16 mm^2
90A	190	max.115	max.225	170	57	8 x 12	35 mm^2
110A	190	max.130	max.220	170	67	8 x 12	35 mm^2
124A	190	max.180	max.160	170	67	8 x 12	ϕ8
143A	190	max.180	max.160	170	77	8 x 12	ϕ8
156 and 170A	190	max.180	max.160	170	77	8 x 12	ϕ10

www.Farazcontrol.com واحد فروش: ۰۹۱۲۹۲۷۵۱۵۹ (مهندس رمضان زاده)

Reactor Series	A (mm)	B (mm)	C (mm)	D (mm)	E (mm)	F (mm)	G
182A	210	max.180	max.185	175	97	8 x 12	ϕ10
230A	240	220		190	119	11 x 15	ϕ12
280A	240	235		190	133	11 x 15	ϕ12
330A	240	240		190	135	11 x 15	ϕ12
400 and 500A	240	220		190	119	11 x 15	ϕ11
600 and 680A	240	230		190	128	11 x 15	ϕ11
790A	300	218		240	136	11 x 15	ϕ11
910A	300	228		240	148	11 x 15	ϕ11
1100A	360	250		310	144	11 x 15	ϕ11

■ Common-mode Filter

The common-mode filter is installed on output side (close to AC drive) to reduce bearing current and reduce interference on surrounding devices.

The following figure shows installation of common-mode filter.

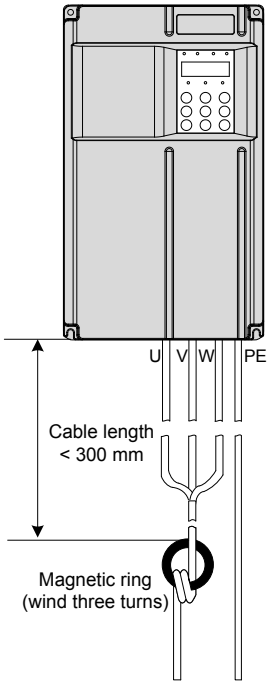

The following figure shows physical appearance of ferrite core.



Common-mode Filter Model	SN	Dimensions (Outer Diameter x Inner Diameter x Thickness) (mm)
DY644020H	11013031	64 x 40 x 20
DY805020H	11013032	80 x 50 x 20
DY1207030H	11013033	120 x 70 x 30

www.Farazcontrol.com واحد فروش: ۰۹۱۲۹۲۷۵۱۵۹ (مهندس رمضان زاده)

A.1.6 Breaker & Fuse Selection

Earth leakage current of AC drive is larger than 3.5 A, requiring grounding protection.

The AC drive produces DC leakage current inside protective conductor, thus a B-type (delay-type) leakage breaker must be used.

When leakage breaker acts accidentally, you can:

- Use a leakage breaker of higher rated action current or use a delay-type leakage breaker.
- Lower the carrier frequency of AC drive.
- Shorten the length of drive cables of motor.
- Take leakage current suppression measures.

Recommended leakage breaker manufacturers are CHINT and Schneider.

For selection of fuse and breaker, see *8.1 MCCB, Fuse and Contactor*.

A.1.7 Shielded Cable

■ Requirements for Shielded Cable

Shielded cable must be used to satisfy EMC requirements of CE marking. Shielded cables are classified into three-conductor cable and four-conductor cable. If conductivity of cable shield is not sufficient, add an independent PE cable, or use a four-conductor cable, of which one phase conductor is PE cable.

Three-conductor cable and four-conductor cable are shown in the following figure.

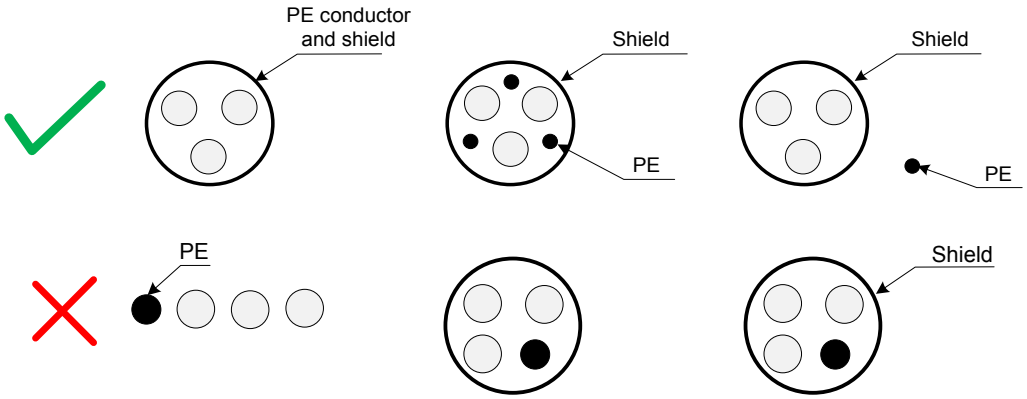

To suppress emission and conduction of radio frequency interference effectively, shield of cable is cooper braid. Braided density of cooper braid should be greater than 90% to enhance shielding efficiency and conductivity, as shown in the following figure.

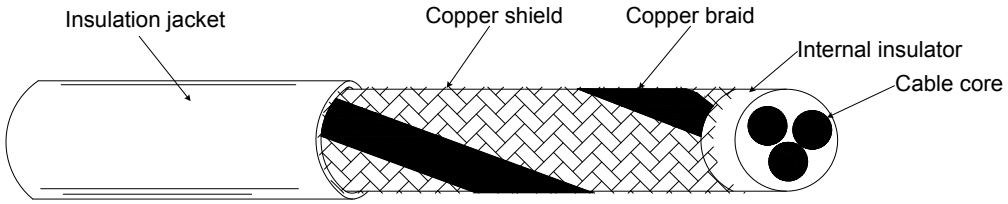

www.Farazcontrol.com واحد فروش: ۰۹۱۲۹۲۷۵۱۵۹ (مهندس رمضان زاده)

■ Cabling Requirements

- Motor cable and PE shielded conducting wire (twisted shielded) should be as short as possible to reduce electromagnetic radiation and external stray current and capacitive current of the cable. If motor cable is over 100 meters long, an output filter or reactor is required.
- It is recommended that all control cables be shielded.
- It is recommended that motor cables, power input cables and control cables be laid in different ducts. To avoid electromagnetic interference caused by rapid change of output voltage of AC drive, motor cables and other cables must not be laid side by side for a long distance.
- If control cable must run across power cable, make sure they are arranged at an angle of close to 90°. Other cables must not run across AC drive.
- Power input and output cables of AC drive and weak-current signal cables (such as control cable) should be laid vertically (if possible) rather than in parallel.
- Cable ducts must be in good connection and well grounded. Aluminium ducts can be used to improve electric potential.
- Filter, AC drive and motor should be connected to system (machinery or appliance) properly, with spraying protection at installation part and conductive metal in full contact.

A.1.8 Solutions to Current Leakage

AC drive outputs high-speed pulse voltage, producing high-frequency leakage current during running of the drive. Each AC drive produces more than 100 mA leakage current. Therefore, it is necessary to select a residual current circuit-breaker with rated operating current of 100 mA above.

AC drive generates DC leakage current in protective conductor. In this case, a time-delay B-type breaker must be used. If multiple AC drives are required, each AC drive must be installed with a circuit-breaker.

Factors that influence the leakage current are as follows:

- AC drive capacity
- Carrier frequency
- Type and length of motor cable
- EMI filter

When leakage current causes the circuit-breaker to act, you should:

- Increase sensitivity current of circuit-breaker.
- Replace circuit-breaker with a new one with high-frequency suppression function.
- Reduce carrier frequency.
- Shorten length of the output cable.
- Install a current leakage suppression device.

Recommended residual current circuit-breaker manufacturers are Chint Electric and Schneider.

www.Farazcontrol.com (مهندس رمضان زاده)۰۹۱۲۹۲۷۵۱۵۹ :واحد فروش

A.1.9 Solutions to Common EMC Interference Problems

AC drive generates very strong interference. Although EMC measures are taken, interference may still exist due to improper cabling or grounding during use. When AC drive interferes with other devices, adopt the following solutions.

Interference Type	Solution
Leakage protection switch tripping	• Reduce carrier frequency. • Shorten length of the AC drive cables. • Wind ferrite core around the drive input cable except PE cable. • For tripping at the moment of power-on, cut off the large capacitance to ground on power input side by disconnecting grounding terminal of external or built-in filter and disconnecting grounding terminal of Y capacitance to ground of input terminals. • For tripping during drive running or when drive enabled, take leakage current suppression measures (install a leakage current filter, install safety capacitor + wind ferrite core).
AC drive interference during running	• Connect motor housing to PE of AC drive. • Connect PE of AC drive to PE of grid. • Wind power input cable with ferrite core. • Add a safety capacitor or ferrite core to interfered signal terminal. • Add an extra common ground.
Communication interference	• Connect motor housing to PE of AC drive. • Connect PE of AC drive to PE of grid. • Wind power input cable with ferrite cores. • Add a matching resistor between communication cable source and load. • Add a common grounding cable besides communication cable. • Use a shielded cable as communication cable and connect cable shield to common grounding point. • Adopt daisy chain mode for multi-node communication and reserve branch length of less than 30 cm.
I/O interference	• Enlarge capacitance at low-speed DI. A maximum of 0.11 uF capacitance is suggested. • Enlarge capacitance at AI. A maximum of 0.22 uF is suggested.

www.Farazcontrol.com واحد فروش: ۰۹۱۲۹۲۷۵۱۵۹ (مهندس رمضان زاده)

A.2 UL Certification

If the AC drive has the cULus mark, it indicates that the product complies with the following North American Standards.

Country	Certification Name	Standard
U.S.	UL	UL508C
Canada	cUL	C22.2 No.14-13

Note that the motor overtemperature test is not assessed by UL.

www.Farazcontrol.com واحد فروش: ۰۹۱۲۹۲۷۵۱۵۹ (مهندس رمضان زاده)

Appendix B Parameter Table

B.1 Introduction

Note	Password protection is available for use with the drive. If this protection has been enabled, you will need to know the user-defined password before you can edit the function codes described in this chapter. See *4.2.6 Password Security* for instructions to set and remove password protection.

Groups F and A include standard function parameters. Group U includes the monitoring function parameters and extension card communication parameters.

The parameter description tables in this chapter use the following symbols.

The symbols in the parameter table are described as follows:

Symbol	Meaning
☆	It is possible to modify the parameter with the drive in the stop or in the Run status.
★	It is not possible to modify the parameter with the drive in the Run status.
•	The parameter is the actual measured value and cannot be modified.
*	The parameter is a factory parameter and can be set only by the manufacturer.

www.Farazcontrol.com واحد فروش: ۰۹۱۲۹۲۷۵۱۵۹ (مهندس رمضان زاده)

B.2 Standard Parameters

Para. No.	Para. Name	Setting Range	Default	Property	Page
Group F0: Standard Parameters					
F0-00	G/P type display	1 : G type 2: P type	Model dependent	★	-
F0-01	Motor 1 control mode	2: V/F control	2	★	-
F0-02	Command source selection	0: Operating panel (keypad & display) (LED off) 1: Terminal I/O control (LED on) 2: Serial comms. (LED flashing)	0	☆	*102*
F0-03	Main frequency reference setting channel selection	0: Digital setting (non-retentive at power down) 1: Digital setting (retentive at power down) 2: AI1 3: AI2 4: AI3 5: Pulse reference 6: Multi-reference 7: Simple PLC 8: PID reference 9: Serial comms.	0	★	*110*
F0-04	Auxiliary frequency reference setting channel selection	0: Digital setting (non-retentive at power down) 1: Digital setting (retentive at power down) 2: AI1 3: AI2 4: AI3 5: Pulse reference 6: Multi-reference 7: Simple PLC 8: PID reference 9: Serial comms.	0	★	*131*
F0-05	Base value of range of auxiliary frequency reference for Main and auxiliary calculation	0: Relative to maximum frequency 1: Relative to main frequency reference	0	☆	*133*
F0-06	Range of auxiliary frequency reference for main and auxiliary calculation	0% to 150%	100%	☆	*133*

www.Farazcontrol.com واحد فروش: ۰۹۱۲۹۲۷۵۱۵۹ (مهندس رمضان زاده)

Para. No.	Para. Name	Setting Range	Default	Property	Page
F0-07	Final Frequency reference setting selection	00 to 34 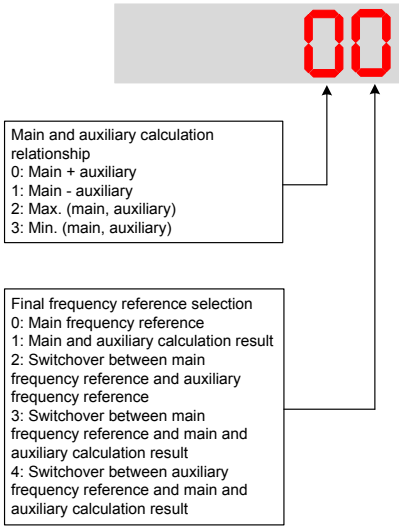	00	☆	133
F0-08	Preset frequency	0.00 to max. frequency (F0-10)	50.00 Hz	☆	145
F0-09	Running direction	0: Run in the default direction 1: Run in the direction reverse to the default direction	0	☆	202
F0-10	Max. frequency	50.00 to 500.00 Hz	50.00 Hz	★	112
F0-11	Setting channel of frequency upper limit	0: Set by F0-12 1: AI1 2: AI2 3: AI3 4: Pulse reference (DI5) 5: Communication reference	0	★	135
F0-12	Frequency reference upper limit	Frequency lower limit (F0-14) to max. frequency (F0-10)	50.00 Hz	☆	135
F0-13	Frequency reference upper limit offset	0.00 Hz to max. frequency (F0-10)	0.00 Hz	☆	-
F0-14	Frequency reference lower limit	0.00 Hz to frequency upper limit (F0-12)	0.00 Hz	☆	135
F0-15	Carrier frequency	Model dependent	Model dependent	☆	-
F0-16	Carrier frequency adjusted with temperature	0: Disabled 1: Enabled	1	☆	-
F0-17	Acceleration time 1	0.00s to 650.00s (F0-19 = 2) 0.0s to 6500.0s (F0-19 = 1) 0s to 65000s (F0-19 = 0)	Model dependent	☆	142
F0-18	Deceleration time 1	0.00s to 650.00s (F0-19 = 2) 0.0s to 6500.0s (F0-19 = 1) 0s to 65000s (F0-19 = 0)	Model dependent	☆	142

www.Farazcontrol.com واحد فروش: ۰۹۱۲۹۲۷۵۱۵۹ (مهندس رمضان زاده)

Para. No.	Para. Name	Setting Range	Default	Property	Page
F0-19	Acceleration/Deceleration time unit	0: 1s 1: 0.1s 2: 0.01s	1	★	142
F0-21	Frequency offset of Auxiliary frequency setting channel for main and auxiliary calculation	0.00 Hz to max. frequency (F0-10)	0.00 Hz	☆	-
F0-22	Frequency reference resolution	2: 0.01 Hz	2	★	-
F0-23	Retentive of digital setting frequency upon stop	0: Not retentive 1: Retentive	0	☆	112
F0-24	Motor parameter group selection	0: Motor parameter group 1 1: Motor parameter group 2	0	★	170
F0-25	Acceleration/Deceleration time base frequency	0: Maximum frequency (F0-10) 1: Frequency reference 2: 100 Hz	0	★	142
F0-26	Base frequency for UP/DOWN modification during running	0: Running frequency 1: Frequency Reference	0	★	-
F0-27	Command source + frequency source	000 to 999 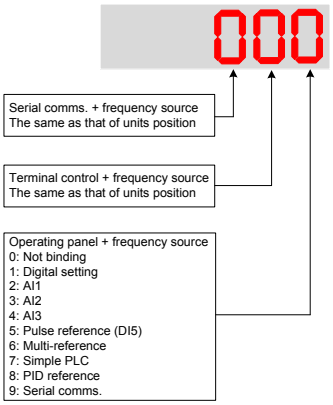	000	☆	134
F0-28	Serial port comms. protocol	0: Modbus protocol 1: PROFIBUS-DP protocol or CANopen protocol	0	★	109
Group F1: Motor 1 Parameters					
F1-00	Motor type selection	0: Common asynchronous motor 1: Variable frequency asynchronous motor	0	★	145
F1-01	Rated motor power	0.1 to 1000.0 kW	Model dependent	★	145
F1-02	Rated motor voltage	1 to 2000 V	Model dependent	★	145
F1-03	Rated motor current	0.01 to 655.35 A (AC drive power ≤ 55 kW) 0.1 to 6553.5 A (AC drive power > 55 kW)	Model dependent	★	145
F1-04	Rated motor frequency	0.01 Hz to max. frequency	Model dependent	★	145
F1-05	Rated motor speed	1 to 65535 rpm	Model dependent	★	145

www.Farazcontrol.com واحد فروش: ۰۹۱۲۹۲۷۵۱۵۹ (مهندس رمضان زاده)

Para. No.	Para. Name	Setting Range	Default	Property	Page
F1-06	Stator resistance	0.001 to 65.535 Ω (AC drive power ≤ 55 kW) 0.0001 to 6.5535 Ω (AC drive power > 55 kW)	Auto-tuning dependent	★	145
F1-07	Rotor resistance	0.001 to 65.535 Ω (AC drive power ≤ 55 kW) 0.0001 to 6.5535 Ω (AC drive power > 55 kW)	Auto-tuning dependent	★	145
F1-08	Leakage inductive reactance	0.01 to 655.35 mH (AC drive power ≤ 55 kW) 0.001 to 65.535 mH (AC drive power > 55 kW)	Auto-tuning dependent	★	145
F1-09	Mutual inductive reactance	0.1 to 6553.5 mH (AC drive power ≤ 55 kW) 0.01 to 655.35 mH (AC drive power > 55 kW)	Auto-tuning dependent	★	145
F1-10	No-load current	0.01 A to F1-03 (AC drive power ≤ 55 kW) 0.1 A to F1-03 (AC drive power > 55 kW)	Auto-tuning dependent	★	145
F1-37	Motor auto-tuning method selection	0: No auto-tuning 1: Static auto-tuning 1 2: Dynamic auto-tuning 3: Static auto-tuning 2	0	★	143
Group F3: V/F Control Parameters					
F3-00	V/F curve setting	0 to 11	0	★	146
F3-01	Torque boost	0.0%: fixed torque boost 0.1% to 30%	Model dependent	☆	146
F3-02	Cut-off frequency of torque boost	0.00 Hz to max. frequency	50.00 Hz	★	146
F3-03	Multi-point V/F frequency 1	0.00 Hz to F3-05	0.00 Hz	★	146
F3-04	Multi-point V/F voltage 1	0.0% to 100.0%	0.0%	★	146
F3-05	Multi-point V/F frequency 2	F3-03 to F3-07	0.00 Hz	★	146
F3-06	Multi-point V/F voltage 2	0.0% to 100.0%	0.0%	★	146
F3-07	Multi-point V/F frequency 3	F3-05 to rated motor frequency (F1-04)	0.00 Hz	★	146
F3-08	Multi-point V/F voltage 3	0.0% to 100.0%	0.0%	★	146
F3-09	Slip compensation gain	0.0% to 200.0%	0.0%	★	-
F3-10	V/F over-excitation gain	0 to 200	64	☆	151
F3-11	V/F oscillation suppression gain	0 to 100	40	☆	151
F3-13	Voltage source for V/F separation	0 to 8	0	☆	148
F3-14	Digital setting of voltage for V/F separation	0 V to rated motor voltage	0 V	☆	148
F3-15	Voltage rise time of V/F separation	0.0s to 1000.0s	0.0s	☆	148

www.Farazcontrol.com واحد فروش: ۰۹۱۲۹۲۷۵۱۵۹ (مهندس رمضان زاده)

Para. No.	Para. Name	Setting Range	Default	Property	Page
F3-16	Voltage decline time of V/F separation	0.0s to 1000.0s	0.0s	☆	148
F3-17	Stop mode selection for V/F separation	0: Frequency and voltage declining to 0 independently 1: Frequency declining after voltage declines to 0	0	☆	148
F3-18	Current limit level	50% to 200%	150%	★	150
F3-19	Current limit selection	0: Disabled 1: Enabled	1	★	150
F3-20	Current limit gain	0 to 100	20	☆	150
F3-21	Compensation factor of speed multiplying current limit level	50% to 200%	50%	★	150
F3-22	Voltage limit	650 to 800 V	770 V	★	151
F3-23	Voltage limit selection	0: Disabled 1: Enabled	1	★	151
F3-24	Frequency gain for voltage limit	0 to 100	30	☆	151
F3-25	Voltage gain for voltage limit	0 to 100	30	☆	151
F3-26	Frequency rise threshold during voltage limit	0 to 50 Hz	5 Hz	★	151
Group F4: Input Terminals					
F4-00	DI1 function selection	0: No function 1: Forward run (FWD) 2: Reverser run (REV) 3: Three-wire control 4: Forward jog (FJOG) 5: Reverse jog (RJOG) 6: Terminal UP 7: Terminal DOWN 8: Coast to stop 9: Fault reset (RESET) 10: RUN disabled 11: External fault normally-open input 12: Multi-reference terminal 1 13: Multi-reference terminal 2 14: Multi-reference terminal 3 15: Multi-reference terminal 4 16: Terminal 1 for acceleration/ deceleration time selection 17: Terminal 2 for acceleration/ deceleration time selection 18: Frequency reference setting channel switchover 19: UP and DOWN setting clear (terminal, operation panel) 20: Command source switchover 1	1	★	178

www.Farazcontrol.com واحد فروش: ۰۹۱۲۹۲۷۵۱۵۹ (مهندس رمضان زاده)

Para. No.	Para. Name	Setting Range	Default	Property	Page
F4-01	DI2 function selection	21: Acceleration/Deceleration prohibited 22: PID disabled 23: PLC state reset 24: Wobble disabled 25: Counter input 26: Counter reset 27: Length signal pulses count 28: Length reset 30: Pulse input as frequency reference (valid only for DI5) 31: Reserved 32: Immediate DC injection braking 33: External fault normally-closed input 34: Frequency modification enabled 35: PID operation direction reverse 36: External stop 1 37: Command source switchover 2 38: PID integral disabled 39: Switchover between main frequency reference and preset frequency 40: Switchover between auxiliary frequency reference and preset frequency 41: Motor selection 42: Reserved 43: PID parameter switchover 44: User-defined fault 1 45: User-defined fault 2 47: Emergency stop (ES) 48: External stop 2 49: Deceleration DC injection braking 50: Clear running time this time 51: Two-wire control/ Three-wire control 52: Reverse running prohibited 53 to 59: Reserved	4	★	178
F4-02	DI3 function selection		9	★	178
F4-03	DI4 function selection		12	★	178
F4-04	DI5 function selection		13	★	178
F4-05	DI6 function selection		0	★	178
F4-06	DI7 function selection		0	★	141
F4-07	DI8 function selection		0	★	178
F4-08	DI9 function selection		0	★	178
F4-09	DI10 function selection		0	★	178
F4-10	DI filter time	0.000s to 1.000s	0.010s	☆	-
F4-11	Terminal I/O control mode	0: Two-wire mode 1 1: Two-wire mode 2 2: Three-wire mode 1 3: Three-wire mode 2	0	★	103
F4-12	Terminal UP/DOWN rate	0.001 to 65.535 Hz/s	1.000 Hz/s	☆	-
F4-13	AI curve 1 min. input	0.00 V to F4-15	0.00 V	☆	113
F4-14	Corresponding percentage of AI curve 1 min. input	-100.00% to 100.0%	0.0%	☆	113

www.Farazcontrol.com واحد فروش: ۰۹۱۲۹۲۷۵۱۵۹ (مهندس رمضان زاده)

Para. No.	Para. Name	Setting Range	Default	Property	Page
F4-15	AI curve 1 max. input	F4-13 to 10.00 V	10.00 V	☆	113
F4-16	Corresponding percentage of AI curve 1 max. input	-100.00% to 100.0%	100.0%	☆	113
F4-17	AI1 filter time	0.00s to 10.00s	0.10s	☆	116
F4-18	AI curve 2 min. input	0.00 V to F4-20	0.00 V	☆	114
F4-19	Corresponding percentage of AI curve 2 min. input	-100.00% to 100.0%	0.0%	☆	114
F4-20	AI curve 2 max. input	F4-18 to 10.00 V	10.00 V	☆	114
F4-21	Corresponding percentage of AI curve 2 max. input	-100.00% to 100.0%	100.0%	☆	114
F4-22	AI2 filter time	0.00s to 10.00s	0.10s	☆	116
F4-23	AI3 curve min. input	-10.00 V to F4-25	0.00 V	☆	114
F4-24	Corresponding percentage of AI curve 3 min. input	-100.00% to 100.0%	0.0%	☆	114
F4-25	AI curve 3 max. input	F4-23 to 10.00 V	10.00 V	☆	114
F4-26	Corresponding percentage of AI curve 3 max. input	-100.00% to 100.0%	100.0%	☆	114
F4-27	AI3 filter time	0.00s to 10.00s	0.10s	☆	116
F4-28	Pulse min. input	0.00 kHz to F4-30	0.00 kHz	☆	118
F4-29	Corresponding percentage of pulse min. input	-100.00% to 100.0%	0.0%	☆	118
F4-30	Pulse max. input	F4-28 to 100.00 kHz	50.00 kHz	☆	118
F4-31	Corresponding percentage of pulse max. input	-100.00% to 100.0%	100.0%		118
F4-32	Pulse filter time	0.00s to 10.00s	0.10s	☆	118
F4-33	AI curve selection	111 to 555 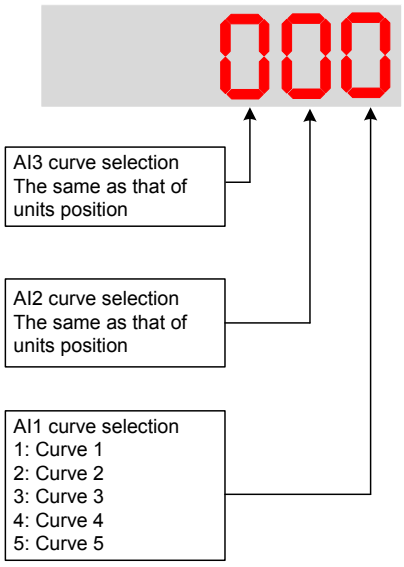	321	☆	116

www.Farazcontrol.com واحد فروش: ۰۹۱۲۹۲۷۵۱۵۹ (مهندس رمضان زاده)

Para. No.	Para. Name	Setting Range	Default	Property	Page
F4-34	Setting selection when AI less than min. input	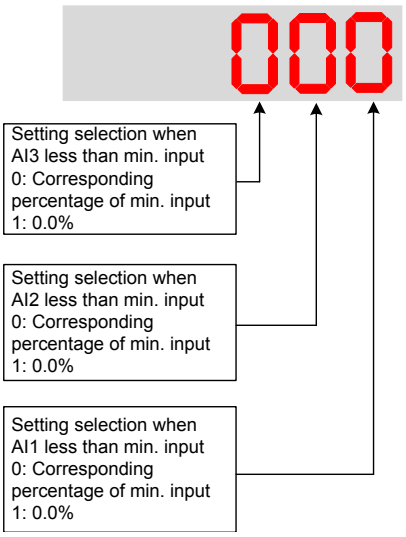	000	☆	-
F4-35	DI1 delay	0.0s to 3600.0s	0.0s	☆	181
F4-36	DI2 delay	0.0s to 3600.0s	0.0s	★	181
F4-37	DI3 delay	0.0s to 3600.0s	0.0s	★	181
F4-38	DI active mode selection 1	00000 to 11111 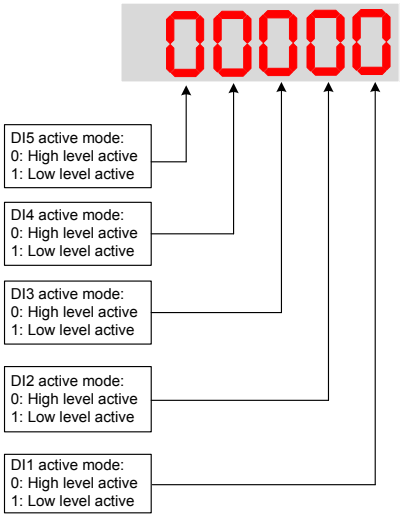	00000	★	181
F4-39	DI active mode selection 2	00000 to 11111 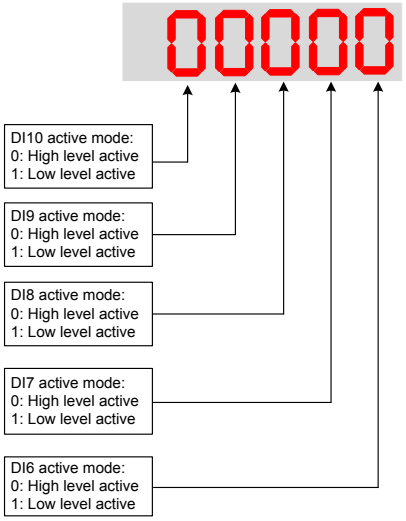	00000	★	182

www.Farazcontrol.com واحد فروش: ۰۹۱۲۹۲۷۵۱۵۹ (مهندس رمضان زاده)

Para. No.	Para. Name	Setting Range	Default	Property	Page
Group F5: Output Terminals					
F5-00	FM terminal output mode	0: Pulse output (FMP) 1: Digital output (FMR)	0	☆	*182*
F5-01	FMR function selection	0: No output 1: AC drive running 2: Fault output 3: Frequency level detection 1 4: Frequency reached 5: Zero-speed running (no output at stop) 6: Motor overload pending 7: AC drive overload pending 8: Set count value reached 9: Designated count value reached 10: Length reached 11: PLC cycle completed 12: Accumulative running time reached 13: Frequency limited 15: Ready for RUN 16: AI1 > AI2 17: Frequency upper limit reached 18: Frequency lower limit reached (no output at stop) 19: Undervoltage 20: Communication setting 21: Reserved 22: Reserved 23: Zero-speed running 2 (having output at stop) 24: Accumulative power-on time reached 25: Frequency level detection 2 26: Frequency 1 reached 27: Frequency 2 reached 28: Current 1 reached 29: Current 2 reached 30: Timing reached 31: AI1 input exceeding limit 32: Load lost 33: Reverse running 34: Zero current 35: IGBT temperature reached 36: Output current exceeding limit 37: Frequency lower limit reached (having output at stop) 38: Alarm output 39: Motor overheat pending 40: Current running time reached 41: Fault output	0	☆	*182*
F5-02	Relay (T/A-T/B-T/C) function selection		2	☆	*182*
F5-03	Extension card relay (P/A-P/B-P/C) function selection		0	☆	*182*
F5-04	DO1 function selection		1	☆	*182*
F5-05	Extension card DO2 function selection		4	☆	*182*
F5-06	FMP function selection		0	☆	*190*
F5-07	AO1 function selection		0	☆	*190*
F5-08	AO2 function selection		1	☆	*190*

www.Farazcontrol.com واحد فروش: ۰۹۱۲۹۲۷۵۱۵۹ (مهندس رمضان زاده)

Para. No.	Para. Name	Setting Range	Default	Property	Page
F5-09	Max. FMP output frequency	0.01 to 100.00 kHz	50.00 kHz	☆	191
F5-10	AO1 zero offset coefficient	-100.0% to 100.0%	0.0%	☆	191
F5-11	AO1 gain	-10.00 to 10.00	1.00	☆	191
F5-12	AO2 zero offset coefficient	-100.0% to 100.0%	0.00%	☆	191
F5-13	AO2 gain	-10.00 to 10.00	1.00	☆	191
F5-17	FMR output delay	0.0s to 3600.0s	0.0s	☆	185
F5-18	Relay 1 output delay	0.0s to 3600.0s	0.0s	☆	185
F5-19	Relay 2 output delay	0.0s to 3600.0s	0.0s	☆	185
F5-20	DO1 output delay	0.0s to 3600.0s	0.0s	☆	185
F5-21	DO2 output delay	0.0s to 3600.0s	0.0s	☆	185
F5-22	DO active mode selection 1	00000 to 11111 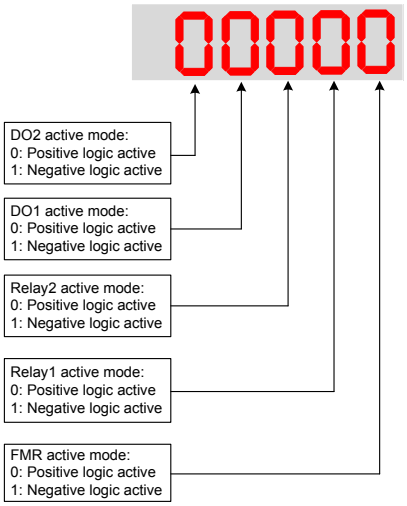	00000	☆	185
Group F6: Start/Stop Control					
F6-00	Start mode	0: Direct start 1: Catching a spinning motor 2: Pre-excited start 3: SVC quick start	0	☆	136
F6-01	Mode of catching a spinning motor	0: From stop frequency 1: From zero speed 2: From max. frequency	0	★	136
F6-02	Speed of catching a spinning motor	1 to 100	20	☆	136
F6-03	Start frequency	0.00 to 10.00 Hz	0.00 Hz	☆	136
F6-04	Start frequency holding time	0.0s to 100.0s	0.0s	★	136
F6-05	DC injection braking 1 level/ Pre-excitation level	0% to 100%	50%	★	136
F6-06	DC injection braking 1 active time /Pre-excitation active time	0.0s to 100.0s	0.0s	★	136
F6-07	Acceleration/Deceleration mode	0 to 2	0	★	142
F6-08	Time proportion of S-curve start segment	0.0% to (100.0% – F6-09)	30.0%	★	142
F6-09	Time proportion of S-curve end segment	0.0% to (100.0% – F6-08)	30.0%	★	142

www.Farazcontrol.com واحد فروش: ۰۹۱۲۹۲۷۵۱۵۹ (مهندس رمضان زاده)

Para. No.	Para. Name	Setting Range	Default	Property	Page
F6-10	Stop mode	0: Decelerate to stop 1: Coast to stop	0	☆	139
F6-11	DC injection braking 2 start frequency	0.00 Hz to maximum frequency	0.00 Hz	☆	139
F6-12	DC injection braking 2 delay time	0.0 to 100.0s	0.0s	☆	139
F6-13	DC injection braking 2 level	0% to 100%	50%	☆	139
F6-14	DC injection braking 2 active time	0.0s to 100.0s	0.0s	☆	139
F6-15	Braking use ratio	0% to 100%	100%	☆	-
F6-18	Catching a spinning motor current limit	30% to 200%	Model dependent	★	-
F6-21	Demagnetization time	0.00s to 5.00s	Model dependent	☆	-
Group F7: Keypad Operation and LED Display					
F7-00	LED default display check	0: Disabled 1: Enabled	0	☆	-
F7-01	MF.K key function selection	0: MF.K key disabled 1: Switchover from remote control (terminal or communication) to keypad control 2: Switchover between forward rotation and reverse rotation 3: Forward jog 4: Reverse jog	0	★	-
F7-02	STOP/RESET key function	0: STOP/RESET key enabled only in keypad control 1: STOP/RESET key enabled in any operation mode	1	☆	-
F7-03	LED display running parameters 1	0000 to FFFF 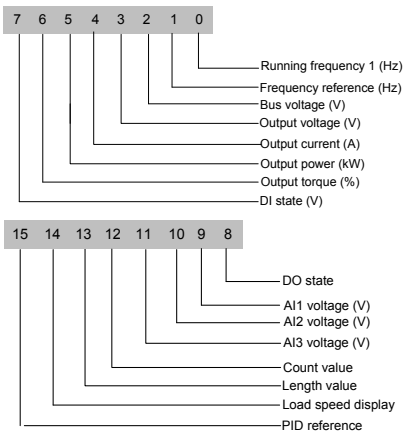	1F	☆	161

www.Farazcontrol.com واحد فروش: ۰۹۱۲۹۲۷۵۱۵۹ (مهندس رمضان زاده)

Para. No.	Para. Name	Setting Range	Default	Property	Page
F7-04	LED display running parameters 2	0000 to FFFF 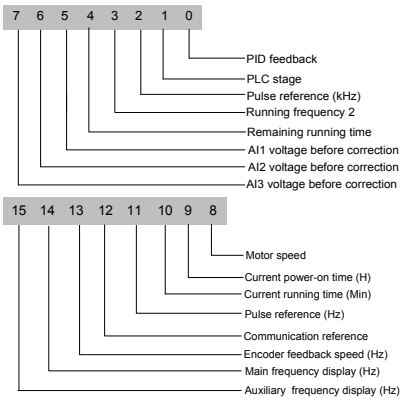	0	☆	*161*
F7-05	LED display stop parameters	0000 to FFFF 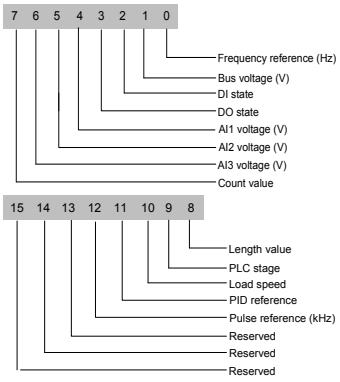	33	☆	*162*
F7-06	Load speed display decimal point coefficient	0.001 to 65.000	1.000	☆	-
F7-07	Heatsink temperature of AC drive IGBT	-20°C to 120°C	-	●	-
F7-08	Product SN	-	-	●	-
F7-09	Accumulative running time	0 to 65535 h	-	●	-
F7-10	Performance software version	-	-	●	-
F7-11	Function software version	-	-	●	-
F7-12	Number of decimal places for load speed display	10 to 23 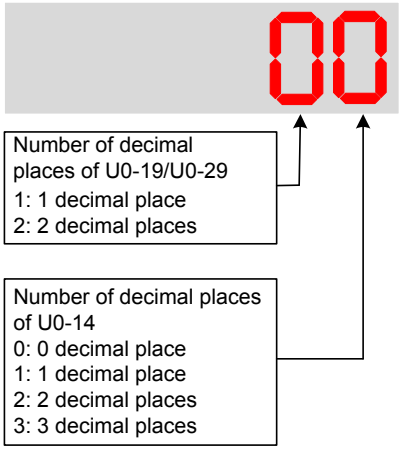	21	☆	-
F7-13	Accumulative power-on time	0 to 65535 h	-	●	-
F7-14	Accumulative power consumption	0 to 65535 kWh	-	●	-

www.Farazcontrol.com واحد فروش: ۰۹۱۲۹۲۷۵۱۵۹ (مهندس رمضان زاده)

Para. No.	Para. Name	Setting Range	Default	Property	Page
Group F8: Auxiliary Functions					
F8-00	Jog frequency reference	0.00 Hz to max. frequency	2.00 Hz	☆	200
F8-01	Jog acceleration time	0.0s to 6500.0s	20.0s	☆	200
F8-02	Jog deceleration time	0.0s to 6500.0s	20.0s	☆	200
F8-03	Acceleration time 2	0.0s to 6500.0s	Model dependent	☆	142
F8-04	Deceleration time 2	0.0s to 6500.0s	Model dependent	☆	142
F8-05	Acceleration time 3	0.0s to 6500.0s	Model dependent	☆	142
F8-06	Deceleration time 3	0.0s to 6500.0s	Model dependent	☆	142
F8-07	Acceleration time 4	0.0s to 6500.0s	0.0s	☆	142
F8-08	Deceleration time 4	0.0s to 6500.0s	0.0s	☆	142
F8-09	Frequency jump 1	0.00 Hz to max. frequency	0.00 Hz	☆	201
F8-10	Frequency jump 2	0.00 Hz to max. frequency	0.00 Hz	☆	201
F8-11	Frequency jump band	0.00 Hz to max. frequency	0.00 Hz	☆	201
F8-12	Forward/Reverse run switchover dead-zone time	0.0s to 3000.0s	0.0s	☆	202
F8-13	Reverse RUN selection	0: Disabled 1: Enabled	0	☆	202
F8-14	Running mode when frequency reference lower than frequency lower limit	0: Run at frequency reference lower limit 1: Stop 2: Run at zero speed	0	☆	135
F8-15	Droop rate	0.0% to 100.0% 0.0% to 100.0% correspond to 0.00 to 10.00 on operating panel.	0.00%	☆	-
F8-16	Accumulative power-on time threshold	0 to 65000 h	0 h	☆	-
F8-17	Accumulative running time threshold	0 to 65000 h	0 h	☆	-
F8-18	Startup protection selection	0: Disabled 1: Enabled	0	☆	-
F8-19	Frequency detection value 1	0.00 Hz to max. frequency	50.00 Hz	☆	203
F8-20	Frequency detection hysteresis 1	0.0% to 100.0%	5.0%	☆	203
F8-21	Detection width of target frequency reached	0.0% to 100.0%	0.0%	☆	203
F8-22	Jump frequency function	0: Disabled 1: Enabled	0	☆	201
F8-25	Switchover frequency of accel time 1 and accel time 2	0.00 Hz to max. frequency	0.00 Hz	☆	204
F8-26	Switchover frequency of decel time 1 and decel time 2	0.00 Hz to max. frequency	0.00 Hz	☆	204
F8-27	Set highest priority to terminal JOG function	0: Disabled 1: Enabled	0	☆	200

www.Farazcontrol.com واحد فروش: ۰۹۱۲۹۲۷۵۱۵۹ (مهندس رمضان زاده)

Para. No.	Para. Name	Setting Range	Default	Property	Page
F8-28	Frequency detection value 2	0.00 Hz to max. frequency	50.00 Hz	☆	203
F8-29	Frequency detection hysteresis 2	0.0% to 100.0%	5.0%	☆	203
F8-30	Detection of frequency 1	0.00 Hz to max. frequency	50.00 Hz	☆	205
F8-31	Detection width of frequency 1	0.0% to 100.0% (max. frequency)	0.0%	☆	205
F8-32	Detection of frequency 2	0.00 Hz to max. frequency	50.00 Hz	☆	205
F8-33	Detection width of frequency 2	0.0% to 100.0% (max. frequency)	0.0%	☆	205
F8-34	Zero current detection level	0.0% to 300.0% (rated motor current)	5.0%	☆	205
F8-35	Zero current detection delay	0.01s to 600.00s	0.10s	☆	205
F8-36	Output overcurrent threshold	0.0% (no detection) 0.1% to 300.0% (rated motor current)	200.0%	☆	159
F8-37	Output overcurrent detection delay	0.00s to 600.00s	0.00s	☆	159
F8-38	Detection level of current 1	0.0% to 300.0% (rated motor current)	100.0%	☆	206
F8-39	Detection width of current 1	0.0% to 300.0% (rated motor current)	0.0%	☆	206
F8-40	Detection level of current 2	0.0% to 300.0% (rated motor current)	100.0%	☆	206
F8-41	Detection width of current 2	0.0% to 300.0% (rated motor current)	0.0%	☆	206
F8-42	Timing function	0: Disabled 1: Enabled	0	★	206
F8-43	Running time setting channel	0 to 3	0	★	206
F8-44	Running time	0.0 to 6500.0 min	0.0 min	★	206
F8-45	AI1 input voltage lower limit	0.00 V to F8-46	3.10 V	☆	207
F8-46	AI1 input voltage upper limit	F8-45 to 10.00 V	6.80 V	☆	207
F8-47	IGBT temperature threshold	0°C to 100°C	75°C	☆	207
F8-48	Cooling fan working mode	0: Working during drive running 1: Working continuously	0	☆	207
F8-49	Wakeup frequency	F8-51 to max. frequency (F0-10)	0.00 Hz	☆	208
F8-50	Wakeup delay time	0.0s to 6500.0s	0.0s	☆	208
F8-51	Hibernating frequency	0.00 Hz to wakeup frequency (F8-49)	0.00 Hz	☆	208
F8-52	Hibernating delay time	0.0s to 6500.0s	0.0s	☆	208
F8-53	Running time threshold this time	0.0 to 6500.0 min	0.0 min	☆	208
F8-54	Output power correction coefficient	0.0% to 200.0%	100.0%	☆	208
F8-55	Emergency stop time	0 to 6553.5	Model dependent	☆	-

www.Farazcontrol.com واحد فروش: ۰۹۱۲۹۲۷۵۱۵۹ (مهندس رمضان زاده)

Para. No.	Para. Name	Setting Range	Default	Property	Page
Group F9: Fault and Protection					
F9-00	Motor overload protection	0: Disabled 1: Enabled	1	☆	153
F9-01	Motor overload protection gain	0.20 to 10.00	1.00	☆	153
F9-02	Motor overload pre-warning coefficient	50% to 100%	80%	☆	154
F9-07	Detection of short-circuit to ground upon power-on	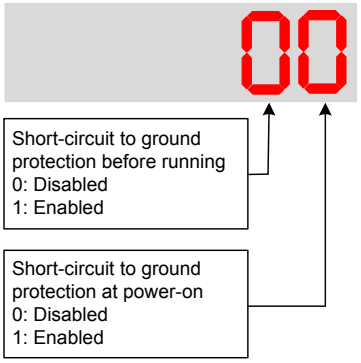	01	☆	-
F9-08	Braking unit applied voltage	650 to 800 V	760 V	★	151
F9-09	Auto reset times	0 to 20	0	☆	155
F9-10	Selection of DO action during auto reset	0: Not act 1: Act	0	☆	155
F9-11	Delay of auto reset	0.1s to 100.0s	1.0s	☆	155
F9-12	Input phase loss/pre-charge relay protection	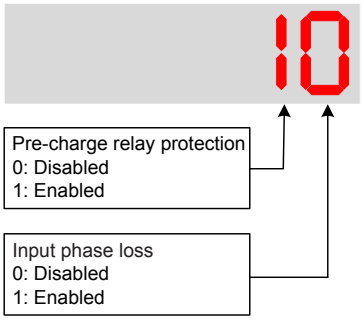	11	☆	154
F9-13	Output phase loss protection	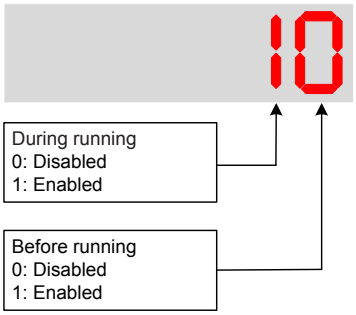	01	☆	155
F9-14	1st fault type	0: No fault 1: Reserved 2: Overcurrent during acceleration 3: Overcurrent during deceleration 4: Overcurrent at constant speed	-	●	-

www.Farazcontrol.com واحد فروش: ۰۹۱۲۹۲۷۵۱۵۹ (مهندس رمضان زاده)

Para. No.	Para. Name	Setting Range	Default	Property	Page
F9-15	2nd fault type	5: Overvoltage during acceleration 6: Overvoltage during deceleration 7: Overvoltage at constant speed 8: Pre-charge resistor fault 9: Undervoltage 10: AC drive overload 11: Motor overload 12: Input phase loss 13: Output phase loss 14: IGBT overheat 15: External fault 16: Communication fault 17: Contactor fault 18: Current detection fault 19: Motor auto-tuning fault 21: EEPROM read-write fault 22: AC drive hardware fault 23: Motor short circuited to ground 24: Reserved 25: Reserved 26: Accumulative running time reached 27: User-defined fault 1 28: User-defined fault 2 29: Accumulative power-on time reached 30: Load loss 31: PID feedback lost during running 40: Pulse-by-pulse current limit fault 41: Motor switchover fault during running 42: Reserved 43: Reserved 55: Slave fault in master/slave control	-	●	-
F9-16	3rd (latest) fault type		-	●	-
F9-17	Frequency upon 3rd fault	-	-	●	-
F9-18	Current upon 3rd fault	-	-	●	-
F9-19	Bus voltage upon 3rd fault	-	-	●	-
F9-20	DI state upon 3rd fault	-	-	●	-
F9-21	DO state upon 3rd fault	-	-	●	-
F9-22	AC drive state upon 3rd fault	-	-	●	-
F9-23	Power-on time upon 3rd fault	-	-	●	-
F9-24	Running time upon 3rd fault	-	-	●	-

www.Farazcontrol.com واحد فروش: ۰۹۱۲۹۲۷۵۱۵۹ (مهندس رمضان زاده)

Para. No.	Para. Name	Setting Range	Default	Property	Page
F9-27	Frequency upon 2nd fault	-	-	●	-
F9-28	Current upon 2nd fault	-	-	●	-
F9-29	Bus voltage upon 2nd fault	-	-	●	-
F9-30	DI state upon 2nd fault	-	-	●	-
F9-31	DO state upon 2nd fault	-	-	●	-
F9-32	AC drive state upon 2nd fault	-	-	●	-
F9-33	Power-on time upon 2nd fault	-	-	●	-
F9-34	Running time upon 2nd fault	-	-	●	-
F9-37	Frequency upon 1st fault	-	-	●	-
F9-38	Current upon 1st fault	-	-	●	-
F9-39	Bus voltage upon 1st fault	-	-	●	-
F9-40	DI state upon 1st fault	-	-	●	-
F9-41	DO state upon 1st fault	-	-	●	-
F9-42	AC drive state upon 1st fault	-	-	●	-
F9-43	Power-on time upon 1st fault	-	-	●	-
F9-44	Running time upon 1st fault	-	-	●	-
F9-47	Fault protection action selection 1	00000 to 22222 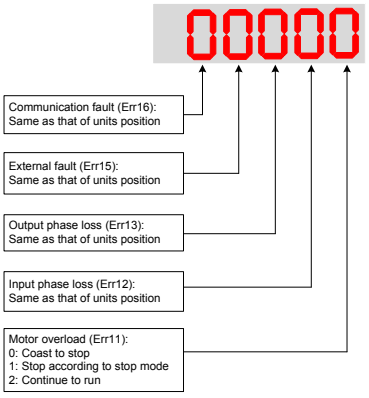	00000	☆	156
F9-48	Fault protection action selection 2	00000 to 11111 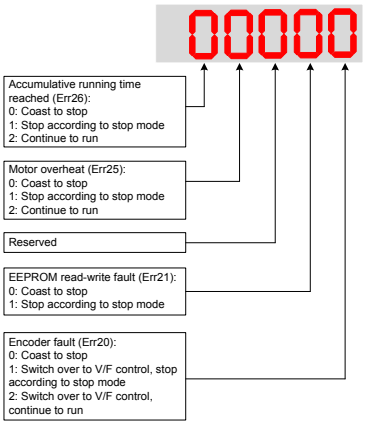	00000	☆	156

www.Farazcontrol.com واحد فروش: ۰۹۱۲۹۲۷۵۱۵۹ (مهندس رمضان زاده)

Para. No.	Para. Name	Setting Range	Default	Property	Page
F9-49	Fault protection action selection 3	00000 to 22222 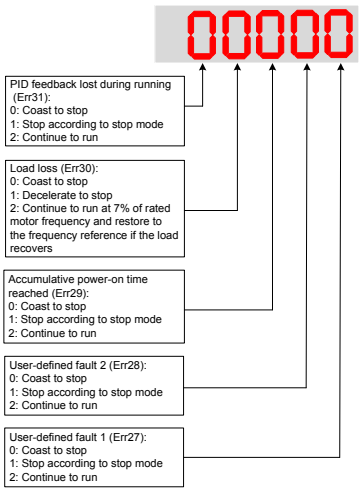	00000	☆	-
F9-54	Frequency selection for continuing to run upon fault	0: Current running frequency 1: Frequency reference 2: Frequency upper limit 3: Frequency lower limit 4: Backup frequency upon abnormality	0	☆	156
F9-55	Backup frequency upon fault	0.0% to 100.0% (max. frequency)	100.0%	☆	156
F9-56	Type of motor temperature sensor	0: No temperature sensor 1: PT100 2: PT1000	0	☆	157
F9-57	Motor overheat protection threshold	0°C to 200°C	110°C	☆	157
F9-58	Motor overheat pre-warning threshold	0°C to 200°C	90°C	☆	157
F9-59	Power dip ride-through function selection	0: Disabled 1: Bus voltage constant control 2: Decelerate to stop	0	★	158
F9-60	Threshold of power dip ride-through function disabled	80% to 100%	85%	★	158
F9-61	Judging time of bus voltage recovering from power dip	0.0s to 100.0s	0.5s	★	158
F9-62	Threshold of power dip ride-through function enabled	60% to 100%	80%	★	158
F9-63	Load lost protection	0: Disabled 1: Enabled	0	☆	158
F9-64	Load lost detection level	0.0% to 100.0%	10.0%	☆	158
F9-65	Load lost detection time	0.0s to 60.0s	1.0s	☆	158
F9-71	Power dip ride-through gain Kp	0 to 100	40	☆	158
F9-72	Power dip ride-through integral coefficient	0 to 100	30	☆	158
F9-73	Deceleration time of power dip ride-through	0.0s to 300.0s	20.0s	★	158

www.Farazcontrol.com واحد فروش: ۰۹۱۲۹۲۷۵۱۵۹ (مهندس رمضان زاده)

Para. No.	Para. Name	Setting Range	Default	Property	Page
Group FA: PID Function					
FA-00	PID reference setting channel	0: Set by FA-01 1: AI1 2: AI2 3: AI3 4: Pulse reference (DI5) 5: Serial comms. 6: Multi-reference	0	☆	125
FA-01	PID digital setting	0.0% to 100.0%	50.0%	☆	126
FA-02	PID feedback setting channel	0: AI1 1: AI2 2: AI3 3: AI1 - AI2 4: Pulse reference (DI5) 5: Serial comms. 6: AI1 + AI2 7: Max. (|AI1|, |AI2|) 8: Min. (|AI1|, |AI2|)	0	☆	126
FA-03	PID operation direction	0: Forward 1: Reverse	0	☆	126
FA-04	PID reference and feedback range	0 to 65535	1000	☆	126
FA-05	Proportional gain Kp1	0.0 to 1000.0	20.0	☆	126
FA-06	Integral time Ti1	0.01s to 10.00s	2.00s	☆	126
FA-07	Differential time Td1	0.000s to 10.000s	0.000s	☆	126
FA-08	PID output limit in reverse direction	0.00 Hz to max. frequency	0.00 Hz	★	127
FA-09	PID error limit	0.0% to 100.0%	0.0%	☆	127
FA-10	PID differential limit	0.00% to 100.00%	0.10%	☆	127
FA-11	PID reference change time	0.00s to 650.00s	0.00s	☆	127
FA-12	PID feedback filter time	0.00s to 60.00s	0.00s	☆	127
FA-13	PID output filter time	0.00s to 60.00s	0.00s	☆	127
FA-14	Reserved	-	-	-	-
FA-15	Proportional gain Kp2	0.0 to 1000.0	20.0	☆	128
FA-16	Integral time Ti2	0.01s to 10.00s	2.00s	☆	128
FA-17	Differential time Td2	0.000s to 10.000s	0.000s	☆	128
FA-18	PID parameter switchover condition	0: No switchover 1: Switchover via DI 2: Auto switchover based on PID error 3: Auto switchover based on running frequency	0	☆	128
FA-19	PID error 1 for auto switchover	0.0% to FA-20	20.0%	☆	128
FA-20	PID error 2 for auto switchover	FA-19 to 100.0%	80.0%	☆	128
FA-21	PID initial value	0.0% to 100.0%	0.0%	☆	128

www.Farazcontrol.com واحد فروش: ۰۹۱۲۹۲۷۵۱۵۹ (مهندس رمضان زاده)

Para. No.	Para. Name	Setting Range	Default	Property	Page
FA-22	PID initial value active time	0.00s to 650.00s	0.00s	☆	128
FA-25	PID integral property	00 to 11 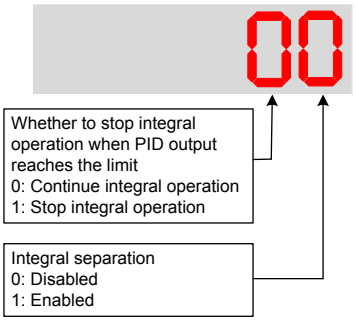	00	☆	129
FA-26	Detection level of PID feedback loss	0.0%: No detection 0.1% to 100.0%	0.0%	☆	129
FA-27	Detection time of PID feedback loss	0.0s to 20.0s	0.0s	☆	129
FA-28	Selection of PID operation at stop	0: Disabled 1: Enabled	0	☆	129
Group Fb: Wobble Function, Fixed Length and Count					
Fb-00	Wobble setting mode	0: Relative to the frequency reference 1: Relative to the max. frequency	0	☆	167
Fb-01	Wobble amplitude	0.0% to 100.0%	0.0%	☆	167
Fb-02	Wobble step	0.0% to 50.0%	0.0%	☆	167
Fb-03	Wobble cycle	0.0s to 3000.0s	10.0s	☆	167
Fb-04	Triangular wave rising time coefficient	0.0% to 100.0%	50.0%	☆	167
Fb-05	Set length	0 to 65535 m	1000 m	☆	168
Fb-06	Actual length	0 to 65535 m	0 m	☆	168
Fb-07	Number of pulses per meter	0.1 to 6553.5	100.0	☆	168
Fb-08	Set count value	1 to 65535	1000	☆	169
Fb-09	Designated count value	1 to 65535	1000	☆	169
Group FC: Multi-Reference and Simple PLC Function					
FC-00	Reference 0	-100.0% to 100.0%	0.0%	☆	119
FC-01	Reference 1	-100.0% to 100.0%	0.0%	☆	119
FC-02	Reference 2	-100.0% to 100.0%	0.0%	☆	119
FC-03	Reference 3	-100.0% to 100.0%	0.0%	☆	119
FC-04	Reference 4	-100.0% to 100.0%	0.0%	☆	119
FC-05	Reference 5	-100.0% to 100.0%	0.0%	☆	119
FC-06	Reference 6	-100.0% to 100.0%	0.0%	☆	119
FC-07	Reference 7	-100.0% to 100.0%	0.0%	☆	119
FC-08	Reference 8	-100.0% to 100.0%	0.0%	☆	119
FC-09	Reference 9	-100.0% to 100.0%	0.0%	☆	119

www.Farazcontrol.com واحد فروش: ۰۹۱۲۹۲۷۵۱۵۹ (مهندس رمضان زاده)

Para. No.	Para. Name	Setting Range	Default	Property	Page
FC-10	Reference 10	-100.0% to 100.0%	0.0%	☆	119
FC-11	Reference 11	-100.0% to 100.0%	0.0%	☆	119
FC-12	Reference 12	-100.0% to 100.0%	0.0%	☆	119
FC-13	Reference 13	-100.0% to 100.0%	0.0%	☆	119
FC-14	Reference 14	-100.0% to 100.0%	0.0%	☆	119
FC-15	Reference 15	-100.0% to 100.0%	0.0%	☆	119
FC-16	Simple PLC running mode	0: Stop after running one cycle 1: Keep final values after running one cycle 2: Repeat after running one cycle	0	☆	122
FC-17	Simple PLC retentive selection	00 to 11 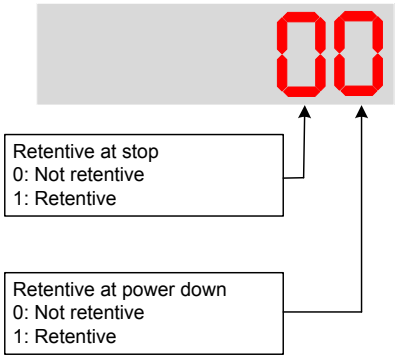	00	☆	123
FC-18	Running time of simple PLC reference 0	0.0s (h) to 6553.5s (h)	0.0s (h)	☆	121
FC-19	Acceleration/deceleration time of simple PLC reference 0	0 to 3	0	☆	121
FC-20	Running time of simple PLC reference 1	0.0s (h) to 6553.5s (h)	0.0s (h)	☆	121
FC-21	Acceleration/deceleration time of simple PLC reference 1	0 to 3	0	☆	121
FC-22	Running time of simple PLC reference 2	0.0s (h) to 6553.5s (h)	0.0s (h)	☆	121
FC-23	Acceleration/deceleration time of simple PLC reference 2	0 to 3	0	☆	121
FC-24	Running time of simple PLC reference 3	0.0s (h) to 6553.5s (h)	0.0s (h)	☆	121
FC-25	Acceleration/deceleration time of simple PLC reference 3	0 to 3	0	☆	121
FC-26	Running time of simple PLC reference 4	0.0s (h) to 6553.5s (h)	0.0s (h)	☆	121
FC-27	Acceleration/deceleration time of simple PLC reference 4	0 to 3	0	☆	121
FC-28	Running time of simple PLC reference 5	0.0s (h) to 6553.5s (h)	0.0s (h)	☆	121
FC-29	Acceleration/deceleration time of simple PLC reference 5	0 to 3	0	☆	121
FC-30	Running time of simple PLC reference 6	0.0s (h) to 6553.5s (h)	0.0s (h)	☆	121

www.Farazcontrol.com واحد فروش: ۰۹۱۲۹۲۷۵۱۵۹ (مهندس رمضان زاده)

Para. No.	Para. Name	Setting Range	Default	Property	Page
FC-31	Acceleration/deceleration time of simple PLC reference 6	0 to 3	0	☆	121
FC-32	Running time of simple PLC reference 7	0.0s (h) to 6553.5s (h)	0.0s (h)	☆	121
FC-33	Acceleration/deceleration time of simple PLC reference 7	0 to 3	0	☆	121
FC-34	Running time of simple PLC reference 8	0.0s (h) to 6553.5s (h)	0.0s (h)	☆	121
FC-35	Acceleration/deceleration time of simple PLC reference 8	0 to 3	0	☆	121
FC-36	Running time of simple PLC reference 9	0.0s (h) to 6553.5s (h)	0.0s (h)	☆	121
FC-37	Acceleration/deceleration time of simple PLC reference 9	0 to 3	0	☆	121
FC-38	Running time of simple PLC reference 10	0.0s (h) to 6553.5s (h)	0.0s (h)	☆	121
FC-39	Acceleration/deceleration time of simple PLC reference 10	0 to 3	0	☆	121
FC-40	Running time of simple PLC reference 11	0.0s (h) to 6553.5s (h)	0.0s (h)	☆	121
FC-41	Acceleration/deceleration time of simple PLC reference 11	0 to 3	0	☆	122
FC-42	Running time of simple PLC reference 12	0.0s (h) to 6553.5s (h)	0.0s (h)	☆	122
FC-43	Acceleration/deceleration time of simple PLC reference 12	0 to 3	0	☆	122
FC-44	Running time of simple PLC reference 13	0.0s (h) to 6553.5s (h)	0.0s (h)	☆	122
FC-45	Acceleration/deceleration time of simple PLC reference 13	0 to 3	0	☆	122
FC-46	Running time of simple PLC reference 14	0.0s (h) to 6553.5s (h)	0.0s (h)	☆	122
FC-47	Acceleration/deceleration time of simple PLC reference 14	0 to 3	0	☆	122
FC-48	Running time of simple PLC reference 15	0.0s (h) to 6553.5s (h)	0.0s (h)	☆	122
FC-49	Acceleration/deceleration time of simple PLC reference 15	0 to 3	0	☆	122
FC-50	Time unit of simple PLC running	0: s (second) 1: h (hour)	0	☆	123
FC-51	Reference 0 source	0: Set by FC-00 1: AI1 2: AI2 3: AI3 4: Pulse reference 5: PID 6: Set by preset frequency (F0-08), modified via terminal UP/DOWN	0	☆	123

www.Farazcontrol.com واحد فروش: ۰۹۱۲۹۲۷۵۱۵۹ (مهندس رمضان زاده)

Para. No.	Para. Name	Setting Range	Default	Property	Page
Group Fd: Communication					
Fd-00	Baud rate	0000 to 6039 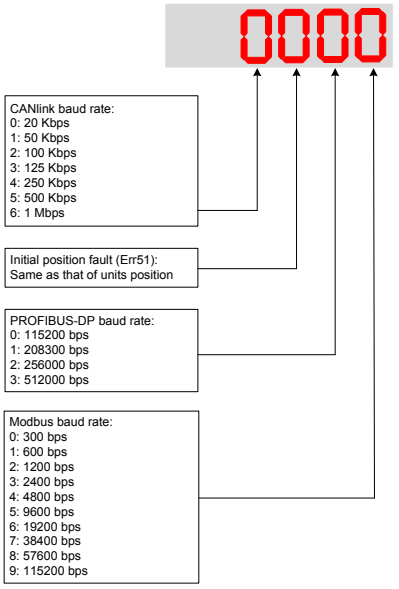	5005	☆	224
Fd-01	Data format symbol	0: No check: data format <8, N, 2> 1: Even parity check: data format <8, E, 1> 2: Odd parity check: data format <8, O, 1> 3: No check: data format <8, N, 1>	0	☆	225
Fd-02	Local address	0: Broadcast address; 1 to 247	1	☆	225
Fd-03	Response delay	0 to 20 ms	2	☆	225
Fd-04	Communication timeout	0.0s: invalid 0.1s to 60.0s Valid for Modbus, PROFIBUS-DP and CANlink	0.0s	☆	225
Fd-05	Modbus protocol selection and PROFIBUS-DP data frame	00 to 31 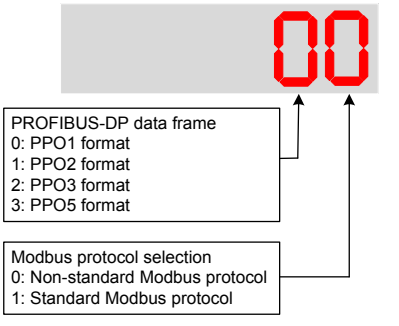	30	☆	225
Fd-06	Current resolution read by communication	0: 0.01 A (valid when ≤ 55 kW) 1: 0.1 A	0	☆	225
Fd-08	CANlink communication timeout time	0.0s (invalid) 0.1s to 60.0s	0	☆	192

www.Farazcontrol.com واحد فروش: ۰۹۱۲۹۲۷۵۱۵۹ (مهندس رمضان زاده)

Para. No.	Para. Name	Setting Range	Default	Property	Page
Group FE: User-Defined Parameters					
FE-00	User-defined parameter 0	F0-00 to FP-xx, A1-00 to Ax-xx, U0-00 to U0-xx	F0-00	☆	-
FE-01	User-defined parameter 1		F0-02	☆	-
FE-02	User-defined parameter 2		F0-03	☆	-
FE-03	User-defined parameter 3		F0-07	☆	-
FE-04	User-defined parameter 4		F0-08	☆	-
FE-05	User-defined parameter 5		F0-17	☆	-
FE-06	User-defined parameter 6		F0-18	☆	-
FE-07	User-defined parameter 7		F3-00	☆	-
FE-08	User-defined parameter 8		F3-01	☆	-
FE-09	User-defined parameter 9		F4-00	☆	-
FE-10	User-defined parameter 10		F4-01	☆	-
FE-11	User-defined parameter 11		F4-02	☆	-
FE-12	User-defined parameter 12		F5-04	☆	-
FE-13	User-defined parameter 13		F5-07	☆	-
FE-14	User-defined parameter 14		F6-00	☆	-
FE-15	User-defined parameter 15		F6-10	☆	-
FE-16	User-defined parameter 16		F0-00	☆	-
FE-17	User-defined parameter 17		F0-00	☆	-
FE-18	User-defined parameter 18		F0-00	☆	-
FE-19	User-defined parameter 19		F0-00	☆	-
FE-20	User-defined parameter 20		F0-00	☆	-
FE-21	User-defined parameter 21		F0-00	☆	-
FE-22	User-defined parameter 22		F0-00	☆	-
FE-23	User-defined parameter 23		F0-00	☆	-
FE-24	User-defined parameter 24		F0-00	☆	-
FE-25	User-defined parameter 25		F0-00	☆	-
FE-26	User-defined parameter 26		F0-00	☆	-
FE-27	User-defined parameter 27		F0-00	☆	-
FE-28	User-defined parameter 28		F0-00	☆	-
FE-29	User-defined parameter 29		F0-00	☆	-
Group FF: Manufacturer Parameters, Access Denied					

www.Farazcontrol.com واحد فروش: ۰۹۱۲۹۲۷۵۱۵۹ (مهندس رمضان زاده)

Para. No.	Para. Name	Setting Range	Default	Property	Page
Group FP: Function Parameter Management					
FP-00	User password	0 to 65535	0	☆	-
FP-01	Parameter initialization	0: No operation 1: Restore factory parameters except motor parameters 2: Clear records 4: Back up current user parameters 501: Restore user backup parameters	0	★	-
FP-02	Parameter display property	00 to 11 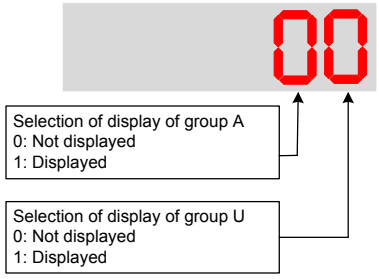	11	☆	-
FP-03	Selection of individualized parameter display	00 to 11 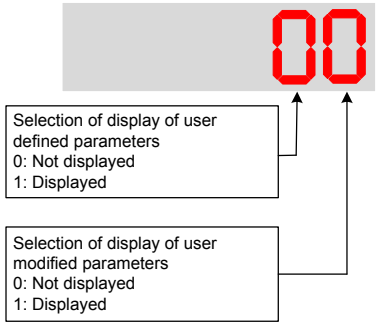	00	☆	-
FP-04	Selection of parameter modification	0: Disabled 1: Enabled	0	☆	-
Group A1: Virtual DI/DO					
A1-00	VDI1 function selection	0: No function 1: Forward run (FWD) 2: Reverser run (REV) 3: Three-wire control 4: Forward jog (FJOG) 5: Reverse jog (RJOG) 6: Terminal UP 7: Terminal DOWN 8: Coast to stop 9: Fault reset (RESET) 10: RUN disabled 11: External fault normally-open input 12: Multi-reference terminal 1 13: Multi-reference terminal 2 14: Multi-reference terminal 3 15: Multi-reference terminal 4	0	★	186

www.Farazcontrol.com واحد فروش: ۰۹۱۲۹۲۷۵۱۵۹ (مهندس رمضان زاده)

Para. No.	Para. Name	Setting Range	Default	Property	Page
A1-01	VDI2 function selection	16: Terminal 1 for acceleration/ deceleration time selection 17: Terminal 2 for acceleration/ deceleration time selection 18: Frequency reference setting channel switchover 19: UP and DOWN setting clear (terminal, operation panel) 20: Command source switchover 1	0	★	*186*
A1-02	VDI3 function selection	21: Acceleration/Deceleration prohibited 22: PID disabled 23: PLC state reset 24: Wobble disabled 25: Counter input 26: Counter reset	0	★	*186*
A1-03	VDI4 function selection	27: Length signal pulses count 28: Length reset 30: Pulse input as frequency reference (valid only for DI5) 31: Reserved 32: Immediate DC injection braking	0	★	*186*
A1-04	VDI5 function selection	33: External fault normally-closed input 34: Frequency modification enabled 35: PID operation direction reverse 36: External stop 1 37: Command source switchover 2 38: PID integral disabled 39: Switchover between main frequency reference and preset frequency 40: Switchover between auxiliary frequency reference and preset frequency 41: Motor selection 42: Reserved 43: PID parameter switchover 44: User-defined fault 1 45: User-defined fault 2 47: Emergency stop (ES) 48: External stop 2 49: Deceleration DC injection braking 50: Clear running time this time 51: Two-wire control/ Three-wire control 52: Reverse running prohibited 53 to 59: Reserved	0	★	*186*

www.Farazcontrol.com واحد فروش: ۰۹۱۲۹۲۷۵۱۵۹ (مهندس رمضان زاده)

Para. No.	Para. Name	Setting Range	Default	Property	Page
A1-05	VDI active state setting mode	00000 to 11111 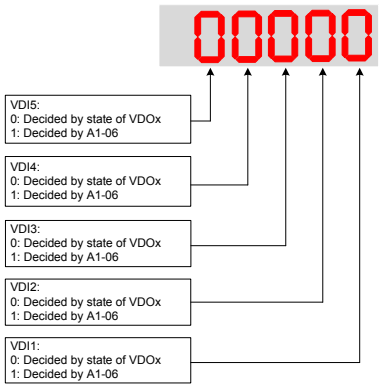	00000	★	186
A1-06	Selection of VDI active state	00000 to 11111 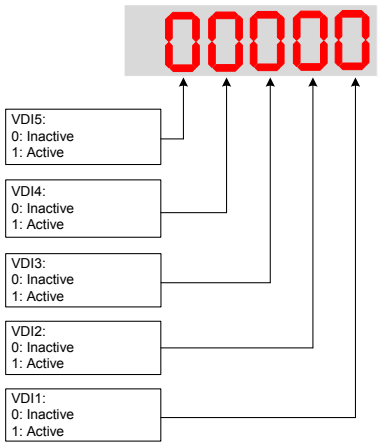	00000	★	186
A1-07	Function selection for AI1 used as DI	0: No function 1: Forward run (FWD) 2: Reverser run (REV) 3: Three-wire control 4: Forward jog (FJOG) 5: Reverse jog (RJOG) 6: Terminal UP 7: Terminal DOWN 8: Coast to stop 9: Fault reset (RESET) 10: RUN disabled 11: External fault normally-open input 12: Multi-reference terminal 1 13: Multi-reference terminal 2 14: Multi-reference terminal 3 15: Multi-reference terminal 4 16: Terminal 1 for acceleration/ deceleration time selection 17: Terminal 2 for acceleration/ deceleration time selection 18: Frequency reference setting channel switchover 19: UP and DOWN setting clear (terminal, operation panel)	0	★	189

www.Farazcontrol.com واحد فروش: ۰۹۱۲۹۲۷۵۱۵۹ (مهندس رمضان زاده)

Para. No.	Para. Name	Setting Range	Default	Property	Page
A1-08	Function selection for AI2 used as DI	20: Command source switchover 1 21: Acceleration/Deceleration prohibited 22: PID disabled 23: PLC state reset 24: Wobble disabled 25: Counter input 26: Counter reset 27: Length signal pulses count 28: Length reset 30: Pulse input as frequency reference (valid only for DI5) 31: Reserved 32: Immediate DC injection braking 33: External fault normally-closed input 34: Frequency modification enabled 35: PID operation direction reverse 36: External stop 1 37: Command source switchover 2 38: PID integral disabled 39: Switchover between main frequency reference and preset frequency 40: Switchover between auxiliary frequency reference and preset frequency 41: Motor selection 42: Reserved 43: PID parameter switchover 44: User-defined fault 1 45: User-defined fault 2 47: Emergency stop (ES) 48: External stop 2 49: Deceleration DC injection braking 50: Clear running time this time 51: Two-wire control/ Three-wire control 52: Reverse running prohibited 53 to 59: Reserved	0	★	189
A1-09	Function selection for AI3 used as DI		0	★	189

www.Farazcontrol.com واحد فروش: ۰۹۱۲۹۲۷۵۱۵۹ (مهندس رمضان زاده)

Para. No.	Para. Name	Setting Range	Default	Property	Page
A1-10	Active state selection for AI used as DI	000 to 111 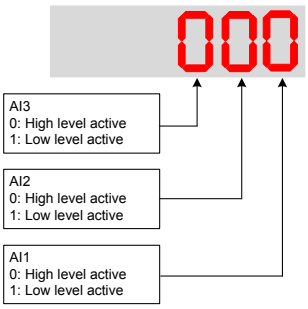	000	☆	189
A1-11	VDO1 function selection	0: No output 1: AC drive running 2: Fault output 3: Frequency level detection 1 output 4: Frequency reached 5: Zero-speed running (no output at stop) 6: Motor overload pending 7: AC drive overload pending 8: Set count value reached 9: Designated count value reached 10: Length reached 11: PLC cycle completed 12: Accumulative running time reached 13: Frequency limited 15: Ready for RUN 16: AI1 > AI2 17: Frequency upper limit reached	0	☆	188
A1-12	VDO2 function selection	18: Frequency lower limit reached (no output at stop) 19: Undervoltage 20: Communication setting 21: Reserved 22: Reserved 23: Zero-speed running 2 (having output at stop) 24: Accumulative power-on time reached 25: Frequency level detection 2 26: Frequency 1 reached 27: Frequency 2 reached 28: Current 1 reached 29: Current 2 reached 30: Timing reached 31: AI1 input exceeding limit 32: Load lost 33: Reverse running	0	☆	188

www.Farazcontrol.com واحد فروش: ۰۹۱۲۹۲۷۵۱۵۹ (مهندس رمضان زاده)

Para. No.	Para. Name	Setting Range	Default	Property	Page
A1-13	VDO3 function selection	34: Zero current 35: IGBT temperature reached 36: Output current exceeding limit 37: Frequency lower limit reached (having output at stop) 38: Alarm output 39: Motor overheat pending 40: Current running time reached 41: Fault output	0	☆	188
A1-14	VDO4 function selection		0	☆	188
A1-15	VDO5 function selection		0	☆	188
A1-16	VDO1 output delay	0.0s to 3600.0s	0.0s	☆	188
A1-17	VDO2 output delay	0.0s to 3600.0s	0.0s	☆	188
A1-18	VDO3 output delay	0.0s to 3600.0s	0.0s	☆	188
A1-19	VDO4 output delay	0.0s to 3600.0s	0.0s	☆	188
A1-20	VDO5 output delay	0.0s to 3600.0s	0.0s	☆	188
A1-21	VDO active mode selection	00000 to 11111 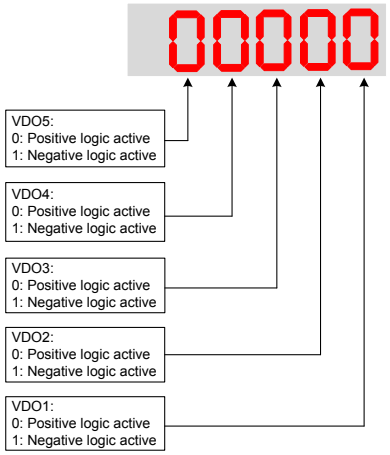	00000	☆	188
Group A2: Motor 2 Parameters					
A2-00	Motor type selection	0 to 1	0	★	170
A2-01	Rated motor power	0.1 to 1000.0 kW	Model dependent	★	170
A2-02	Rated motor voltage	1 to 2000 V	Model dependent	★	170
A2-03	Rated motor current	0.01 to 655.35 A (AC drive power ≤ 55 kW) 0.1 to 6553.5 A (AC drive power > 55 kW)	Model dependent	★	170
A2-04	Rated motor frequency	0.01 Hz to max. frequency	Model dependent	★	170
A2-05	Rated motor speed	1 to 65535 rpm	Model dependent	★	170
A2-06	Stator resistance	0.001 to 65.535 Ω (AC drive power ≤ 55 kW) 0.0001 to 6.5535 Ω (AC drive power > 55 kW)	Auto-tuning dependent	★	170

www.Farazcontrol.com واحد فروش: ۰۹۱۲۹۲۷۵۱۵۹ (مهندس رمضان زاده)

Para. No.	Para. Name	Setting Range	Default	Property	Page
A2-07	Rotor resistance	0.001 to 65.535 Ω (AC drive power ≤ 55 kW) 0.0001 to 6.5535 Ω (AC drive power > 55 kW)	Auto-tuning dependent	★	170
A2-08	Leakage inductive reactance	0.01 to 655.35 mH (AC drive power ≤ 55 kW) 0.001 to 65.535 mH (AC drive power > 55 kW)	Auto-tuning dependent	★	171
A2-09	Mutual inductive reactance	0.1 to 6553.5 mH (AC drive power ≤ 55 kW) 0.01 to 655.35 mH (AC drive power > 55 kW)	Auto-tuning dependent	★	171
A2-10	No-load current	0.01 A to A2-03 (AC drive power ≤ 55 kW) 0.1 A to A2-03 (AC drive power > 55 kW)	Auto-tuning dependent	★	171
A2-37	Motor auto-tuning method selection	0: No auto-tuning 1: Static auto-tuning 1 2: Dynamic auto-tuning 3: Static auto-tuning 2	0	★	-
A2-62	Motor 2 control mode	2: V/F control	2	★	-
A2-63	Motor 2 acceleration/deceleration time selection	0: The same motor 1 2: Acceleration/deceleration time 2 3: Acceleration/deceleration time 3 4: Acceleration/deceleration time 4	0	☆	-
A2-64	Motor 2 torque boost	0.0%: fixed torque boost 0.1% to 30.0%	Model dependent	☆	-
A2-66	Motor 2 oscillation suppression gain	0 to 100	40	☆	-
Group A5: Control Optimization					
A5-00	DPWM switchover frequency upper limit	5.00 Hz to max. frequency	8.00 Hz	☆	152
A5-01	PWM modulation pattern	0: Asynchronous modulation 1: Synchronous modulation	0	☆	152
A5-02	Dead zone compensation mode selection	0: No compensation 1: Compensation mode 1	1	☆	-
A5-03	Random PWM depth	0 to 10	0	☆	152
A5-04	Overcurrent fast prevention	0: Disabled 1: Enabled	1	☆	159
A5-05	Max. output voltage coefficient	100% to 110%	105%	★	152
A5-06	Undervoltage threshold	210 to 420 V	350 V	☆	159
A5-08	Dead-zone time adjustment	100% to 200%	150%	★	-

www.Farazcontrol.com واحد فروش: ۰۹۱۲۹۲۷۵۱۵۹ (مهندس رمضان زاده)

Para. No.	Para. Name	Setting Range	Default	Property	Page
A5-09	Overvoltage threshold	200.0 to 2500.0 V	Model dependent	★	159
A5-10	Energy saving control	0: Disabled 1: Enabled	0	★	-
Group A6: AI Curve Setting					
A6-00	AI curve 4 min. input	-10.00 V to A6-02	0.00 V	☆	115
A6-01	Corresponding percentage of AI curve 4 min. input	-100.0% to 100.0%	0.0%	☆	115
A6-02	AI curve 4 inflexion 1 input	A6-00 to A6-04	3.00 V	☆	115
A6-03	Corresponding percentage of AI curve 4 inflexion 1 input	-100.0% to 100.0%	30.0%	☆	115
A6-04	AI curve 4 inflexion 2 input	A6-02 to A6-06	6.00 V	☆	115
A6-05	Corresponding percentage of AI curve 4 inflexion 2 input	-100.0% to 100.0%	60.0%	☆	115
A6-06	AI curve 4 max. input	A6-04 to 10.00 V	10.00 V	☆	115
A6-07	Corresponding percentage of AI curve 4 max. input	-100.0% to 100.0%	100.0%	☆	115
A6-08	AI curve 5 min. input	-10.00 V to A6-10	-10.00 V	☆	115
A6-09	Corresponding percentage of AI curve 5 min. input	-100.0% to 100.0%	-100.0%	☆	115
A6-10	AI curve 5 inflexion 1 input	A6-08 to A6-12	-3.00 V	☆	115
A6-11	Corresponding percentage of AI curve 5 inflexion 1 input	-100.0% to 100.0%	-30.0%	☆	115
A6-12	AI curve 5 inflexion 2 input	A6-10 to A6-14	3.00 V	☆	115
A6-13	Corresponding percentage of AI curve 5 inflexion 2 input	-100.0% to 100.0%	30.0%	☆	115
A6-14	AI curve 5 max. input	A6-12 to 10.00 V	10.00 V	☆	115
A6-15	Corresponding percentage of AI curve 5 max. input	-100.0% to 100.0%	100.0%	☆	115
A6-24	Jump point of AI1 input corresponding setting	-100.0% to 100.0%	0.0%	☆	-
A6-25	Jump amplitude of AI1 input corresponding setting	0.0% to 100.0%	0.5%	☆	-
A6-26	Jump point of AI2 input corresponding setting	-100.0% to 100.0%	0.0%	☆	-
A6-27	Jump amplitude of AI2 input corresponding setting	0.0% to 100.0%	0.5%	☆	-
A6-28	Jump point of AI3 input corresponding setting	-100.0% to 100.0%	0.0%	☆	-
A6-29	Jump amplitude of AI3 input corresponding setting	0.0% to 100.0%	0.5%	☆	-

www.Farazcontrol.com واحد فروش: ۰۹۱۲۹۲۷۵۱۵۹ (مهندس رمضان زاده)

Para. No.	Para. Name	Setting Range	Default	Property	Page
Group A7: User Programmable Card					
A7-00	User programmable function selection	0: Disabled 1: Enabled	0	★	173
A7-01	AC drive output terminal control source selection	00000 to 11111 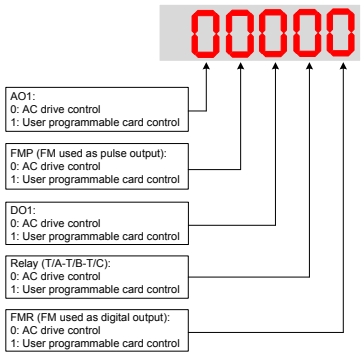	00000	★	174
A7-02	User programmable card AI3 and AO2 function selection	0: AI3 (voltage input), AO2 (voltage output) 1: AI3 (voltage input), AO2 (current output) 2: AI3 (current input), AO2 (voltage output) 3: AI3 (current input), AO2 (current output) 4: AI3 (PTC input), AO2 (voltage output) 5: AI3 (PTC input), AO2 (current output) 6: AI3 (PT100 input), AO2 (voltage output) 7: AI3 (PT100 input), AO2 (current output)	0	★	173
A7-03	PLC program controls the FMP output	0.0% to 100.0%	0.0%	☆	174
A7-04	PLC program controls the AO1 output	0.0% to 100.0%	0.0%	☆	174
A7-05	Selection of PLC program controlling digital output	000 to 111 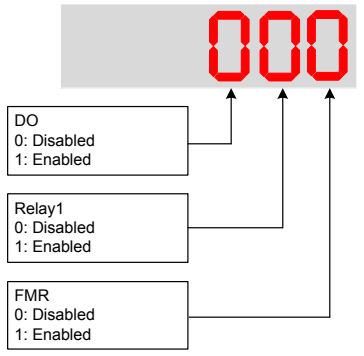	000	☆	174
A7-06	Setting frequency reference via the user programmable card	-100.00% to 100.00%	0.00%	☆	175

www.Farazcontrol.com واحد فروش: ۰۹۱۲۹۲۷۵۱۵۹ (مهندس رمضان زاده)

Para. No.	Para. Name	Setting Range	Default	Property	Page
A7-08	Setting running command via the user programmable card	0: No command 1: Forward run 2: Reverse run 3: Forward jog 4:Reverse jog 5: Coast to stop 6: Decelerate to stop 7: Fault reset	0	☆	175
A7-09	Setting fault via the user programmable card	0: No fault 80 to 89: fault code	0	☆	175
Group A8: Point-point Communication					
A8-00	Point-point communication	0: Disabled 1: Enabled	0	☆	176
A8-01	Master or slave selection	0: Master 1: Slave	0	☆	176
A8-02	Selection of action of the slave in point-point communication	000 to 111 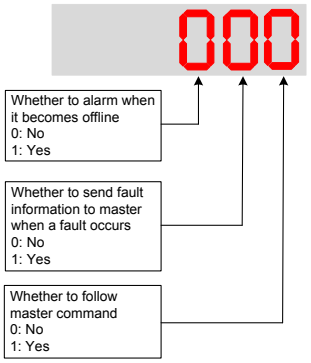	011	★	177
A8-03	The slave received data	0: Output frequency 1: Frequency reference	0	☆	177
A8-04	Zero offset of received data	-100.00 to 100.00	0.00	☆	177
A8-05	Gain of received data	-10.00 to 10.00	1.00	☆	177
A8-06	Point-point communication interruption detection time	0.0s to 10.0s	1.0s	☆	177
A8-07	Master data sending cycle in point-point communication	0.001s to 10.000s	0.001s	☆	177
A8-08	Zero offset of receiving data (frequency)	-100.00% to 100.00%	0.00%	★	-
A8-09	Gain of receiving data (frequency)	-10.00 to 100.00	1.00	★	-
A8-10	Runaway prevention coefficient	0.00% to 100.00%	10.00%	★	-
A8-11	Window width	0.20 to 10.00 Hz	0.50 Hz		177
Group AC: AI/AO Correction					
AC-00	AI1 measured voltage 1	-10.00 to 10.000 V	Factory-corrected	☆	-
AC-01	AI1 displayed voltage 1	-10.00 to 10.000 V	Factory-corrected	☆	-
AC-02	AI1 measured voltage 2	-10.00 to 10.000 V	Factory-corrected	☆	-

www.Farazcontrol.com واحد فروش: ۰۹۱۲۹۲۷۵۱۵۹ (مهندس رمضان زاده)

Para. No.	Para. Name	Setting Range	Default	Property	Page
AC-03	AI1 displayed voltage 2	-10.00 to 10.000 V	Factory-corrected	☆	-
AC-04	AI2 measured voltage 1	-10.00 to 10.000 V	Factory-corrected	☆	-
AC-05	AI2 displayed voltage 1	-10.00 to 10.000 V	Factory-corrected	☆	-
AC-06	AI2 measured voltage 2	-10.00 to 10.000 V	Factory-corrected	☆	-
AC-07	AI2 displayed voltage 2	-10.00 to 10.000 V	Factory-corrected	☆	-
AC-08	AI3 measured voltage 1	-10.00 to 10.000 V	Factory-corrected	☆	-
AC-09	AI3 displayed voltage 1	-10.00 to 10.000 V	Factory-corrected	☆	-
AC-10	AI3 measured voltage 2	-10.00 to 10.000 V	Factory-corrected	☆	-
AC-11	AI3 displayed voltage 2	-10.00 to 10.000 V	Factory-corrected	☆	-
AC-12	AO1 target voltage 1	-10.00 to 10.000 V	Factory-corrected	☆	-
AC-13	AO1 measured voltage 1	-10.00 to 10.000 V	Factory-corrected	☆	-
AC-14	AO1 target voltage 2	-10.00 to 10.000 V	Factory-corrected	☆	-
AC-15	AO1 measured voltage 2	-10.00 to 10.000 V	Factory-corrected	☆	-
AC-16	AO2 target voltage 1	-10.00 to 10.000 V	Factory-corrected	☆	-
AC-17	AO2 measured voltage 1	-10.00 to 10.000 V	Factory-corrected	☆	-
AC-18	AO2 target voltage 2	-10.00 to 10.000 V	Factory-corrected	☆	-
AC-19	AO2 measured voltage 2	-10.00 to 10.000 V	Factory-corrected	☆	-
AC-20	AI2 measured current 1	0.000 to 20.000 mA	Factory-corrected	☆	-
AC-21	AI2 sampling current 1	0.000 to 20.000 mA	Factory-corrected	☆	-
AC-22	AI2 measured current 2	0.000 to 20.000 mA	Factory-corrected	☆	-
AC-23	AI2 sampling current 2	0.000 to 20.000 mA	Factory-corrected	☆	-
AC-24	AO1 ideal current 1	0.000 to 20.000 mA	Factory-corrected	☆	-
AC-25	AO1 measured current 1	0.000 to 20.000 mA	Factory-corrected	☆	-
AC-26	AO1 ideal current 2	0.000 to 20.000 mA	Factory-corrected	☆	-
AC-27	AO1 measured current 2	0.000 to 20.000 mA	Factory-corrected	☆	-

www.Farazcontrol.com واحد فروش: ۰۹۱۲۹۲۷۵۱۵۹ (مهندس رمضان زاده)

B.3 Monitoring Function Codes

Para. No.	Para. Name	Display Range	Page
Group U0: Monitoring Parameters			
U0-00	Running frequency	0.00 to 500.0 Hz	162
U0-01	Frequency reference	0.00 to 500.0 Hz	162
U0-02	Bus voltage	0.0 to 3000.0 V	162
U0-03	Output voltage	0 to 1140 V	162
U0-04	Output current	0.00 to 655.35 A	162
U0-05	Output power	0 to 32767	162
U0-07	DI state	0 to 32767	162
U0-08	DO state	0 to 1023	163
U0-09	AI1 voltage	-	-
U0-10	AI2 voltage	-	163
U0-11	AI3 voltage	-	-
U0-12	Count value	-	-
U0-13	length value	-	-
U0-14	Load speed display	0 to rated motor speed	163
U0-15	PID reference	0 to 65535	163
U0-16	PID feedback	0 to 65535	163
U0-17	PLC stage	-	-
U0-18	Pulse reference	0.00 to 20.00 kHz	163
U0-19	Feedback speed	-500.0 to 500.0 Hz	163
U0-20	Remaining running time	0.0 to 6500.0 min	163
U0-21	AI1 voltage before correction	0.00 to 10.57 V	164
U0-22	AI2 voltage (V)/ current (mA) before correction	0.00 to 10.57 V	164
U0-23	AI3 voltage before correction	-10.57 to 10.57 V	164
U0-24	Motor speed	0 to rated motor speed	164
U0-25	Accumulative power-on time	-	-
U0-26	Accumulative running time	-	-
U0-27	Pulse reference	0 to 65535 Hz	164
U0-28	Communication reference	-100.00% to 100.00%	164
U0-30	Main frequency reference	0.00 to 500.00 Hz	164
U0-31	Auxiliary frequency reference	0.00 to 500.00 Hz	164
U0-32	Viewing any register address value	-	-
U0-34	Motor temperature	-	164

www.Farazcontrol.com واحد فروش: ۰۹۱۲۹۲۷۵۱۵۹ (مهندس رمضان زاده)

Para. No.	Parameter Name	Display Range	Page
U0-37	Power factor angle	-180° to 180°	164
U0-39	Target voltage upon V/F separation	0 V to rated motor voltage	164
U0-40	Output voltage upon V/F separation	0 V to rated motor voltage	164
U0-41	DI state display	-	164
U0-42	DO state display	-	164
U0-43	DI set for function state display 1	-	165
U0-44	DI set for function state display 2	-	165
U0-45	Fault information	0 to 51	-
U0-59	Frequency Reference	-100.00% to 100.00%	165
U0-60	Running frequency	-100.00% to 100.00%	165
U0-61	AC drive state	0 to 65535	165
U0-62	Current fault code	0 to 99	165
U0-63	Master sending value of point-point communication	-	-
U0-64	Number of slaves	0 to 63	165
U0-66	Communication extension card type	100: CANopen 200: PROFIBUS-DP 300: CANlink	-
U0-67	Communication extension card version	-	-
U0-68	AC drive status read via DP card	-	-
U0-69	Speed of transmitting DP	0.00 Hz to max. frequency	-
U0-70	Motor speed of transmitting DP	0 to rated motor	-
U0-71	Communication card current display	-	-
U0-72	Communication card faulty state	-	-
U0-73	Motor SN	0: Motor 1 1: Motor 2	-
U0-74	AC drive output torque	-200.0% to 200.0%	
U0-76	Low bits of accumulative power consumption	0.0 to 999.0 (min. unit: 0.1°)	-
U0-77	High bits of accumulative power consumption	0.0 to 65535 (min. unit: 1°)	-
U0-78	Linear speed	0 to 65535	-

www.Farazcontrol.com واحد فروش: ۰۹۱۲۹۲۷۵۱۵۹ (مهندس رمضان زاده)

Index

About Multi-functional Extension Interfaces 213
About Use of MD290 Terminals.....210
AC Motor (Induction/Asynchronous).....6
Acceleration/Deceleration Time.....141
Acceleration/Deceleration Time Switchover 204
Adjusting AC Drive Parameters.....6
AI Terminals.....189
AI1 Input Voltage Upper/Lower Limit.....207
Analog Output (AO).....199
AO Terminals.....190
Application.....217
Auxiliary Control 152
Auxiliary Function 200
Backplate Mounting.....28
Braking Resistor 232
Braking Unit.....232
Braking Unit Applied Voltage 151
Breaker & Fuse Selection.....302
Bus Structure.....217
CE.....86
CE Low Voltage Directive Compliance 286
CE Mark.....286
Command Source + Frequency Reference Setting Channel 134
Communication.....192
Communication Parameter Description.....224
Complying with Local Regulations.....5
Contactor.....231
Control Circuit Terminals 68
Control Circuit Terminals 178
Control Circuit Wiring.....68
Control Performance 146
Cooling Fan 207
Counting 169
Current Detection 206
Current Limit Control 149
Daily Inspection 262
Data Format.....218
Definition of Communication Data Address 214
Definition of Communication Parameter Addresses 221
Definition of Terms.....288
De-rating.....20
Description of Parameters 102
Description of Peripheral Electrical Devices.....230
DI Terminals.....178
Digital Output (DO, Relay, FMR) 199
DO Terminals.....182
Electrical Installation.....48
Electrical Installation - Safety 5
Electrical Safety.....4
EMC Guidelines Compliance.....288
Extension Cards 239
Extension Communication Cards 247
External Operating Panel 238
Fault Display.....273
Fault Protection Action Selection.....156
Fault Reset 155
Faults and Diagnostics 275
Fixed Length Control 168
Frequency Detection (FDT).....203
Frequency Reached Detection 205
Frequency Reference Limit 135
Frequency Reference Reached Detection Width 203
Functional Extension Cards.....240
Fuse.....231
FWD/REV Switchover Dead-zone Time 201
Get Familiar With Operating Panel.....92

www.Farazcontrol.com واحد فروش: ۰۹۱۲۹۲۷۵۱۵۹ (مهندس رمضان زاده)

Hibernating and Wakeup 207
High-speed Pulse Output (FMR) 199
IGBT Temperature 207
Improving Field Weakening Area Performance . 152
Inbuilt LED Operating Panel 80
Installation Environment 22
Installation Method and Procedures 28
Insulation Test on Main Circuit 265
Interfaces and Communication 210
Internal View of MD290 9
Introduction 80
Introduction 306
Jog 200
Jump Frequency 201
LED Default Display Check 90
LED Operating Panel Menu Structure 84
Lifetime of Fans and Electrolytic DC Bus Capacitors 266
Load Lost Protection 158
Machine/System Design 4
Main & Auxiliary Calculation 132
Main Circuit Cable Recommendations 62
Main Circuit Terminals 49
Main Circuit Wiring 49
Maintenance and Inspection 262
MCCB 231
Mechanical Installation 22
MF.K Key Function 89
Modbus Communication Protocol 217
Monitoring 160
Monitoring Function Codes 342
Motor 2 Parameters 170
Motor Auto-tuning 143
Motor Overheat Protection 157
Motor Overload Protection 153
Mounting Dimensions 25
Mounting in Cabinet 33
Mounting Orientation and Clearance 23
Non-Parameter Data 215
Operating Panel (Keypad & Display) 80
Options 228
Output Overcurrent Protection 159
Output Power correction 208
Overall Arrangement of Function Parameters 87
Overcurrent Fast Prevention 159
Parameter Data 214
Parameter Initialization 199
Parameter Table 306
Password Security 90
Periodic Inspection 264
Periodic Inspection Items 264
Peripherals 228
Phase Loss Protection 154
Please Read This Important Information 1
Power Dip Ride-through 157
Process Control 166
Product Information 8
Product Type Identification 8
Protections 153
Pulse Output Terminals 190
Quick Setup 92
Ratings 13
Read and Write Function Parameters 192
Read and Write State Parameters 194
Remove and Refit the Front cover 44
Resetting Fault 274
Reverse Run Prohibited 201
Running Mode When Frequency Reference Below Lower Limit 135
Running Time Threshold This Time 208
Safety Information 272
Safety Information and Precautions 4

www.Farazcontrol.com واحد فروش: ۰۹۱۲۹۲۷۵۱۵۹ (مهندس رمضان زاده)

Safety of Personnel 4
Saving and Restoring Settings 89
S-curve Setting 141
Selection of Peripheral EMC Devices..... 289
Serial Communication 109
Serial Communication 212
Set Auxiliary Frequency Reference 131
Set Frequency Reference..... 110
Set Main Frequency Reference..... 110
Setup Flowchart..... 93
Shielded Cable 302
Solutions to Common EMC Interference Problems 304
Solutions to Current Leakage 303
Standard Parameters 307
Standards Compliance 286
Start Mode 136
Start/Stop Command Source 102
Start/Stop the AC Drive 136
Stop Mode 139
Storage 270
Symptoms and Diagnostics 282
Technical Specifications 16
Terminal I/O Control..... 103
The Wobble Function 166
Through Hole Mounting 30
Through-hole Mounting Bracket 257
Timing Function 206
Torque Boost 149
Troubleshooting... 272
Troubleshooting During Trial Run 273
Typical System Connection 48
UL Certification 305
Undervoltage & Overvoltage Threshold 159
User Programmable Card..... 171
V/F Curve 146
VDI Terminals 186
VDO Terminals 188
Version Change Record 348
Voltage Limit 151
Warnings, Cautions and Notes 4
Warranty Agreement..... 270
Wiring Checklist... 77
Wiring Diagrams 71
Working Environment and Handling 5
Write Frequency Reference..... 198
Write RUN Command..... 196
Zero Current Detection 205

www.Farazcontrol.com واحد فروش: ۰۹۱۲۹۲۷۵۱۵۹ (مهندس رمضان زاده)

Revision History

Date	Version	Change Description
May 2015	V0.0	First issue.
Sep2016	B00	Add large power rating data. F7-10 = U29.07 F7-11 = U29.16
Nov 2016	B01	Modified Approvals, designation rule and nameplate.
Nov 2018	B02	Updated Inovance's logo. Modified Approvals.

www.Farazcontrol.com واحد فروش: ۰۹۱۲۹۲۷۵۱۵۹ (مهندس رمضان زاده)

Shenzhen Inovance Technology Co., Ltd.
Add.: Building E, Hongwei Industry Park, Liuxian Road, Baocheng No. 70 Zone, Bao' an District, Shenzhen
Tel: +86-755-2979 9595
Fax: +86-755-2961 9897
Service Hotline: 400-777-1260
http: //www.inovance.com

Suzhou Inovance Technology Co., Ltd.
Add.: No. 16 Youxiang Road, Yuexi Town, Wuzhong District, Suzhou 215104, P.R. China
Tel: +86-512-6637 6666
Fax: +86-512-6285 6720
Service Hotline: 400-777-1260
http: //www.inovance.com

Copyright © Shenzhen Inovance Technology Co., Ltd.

www.Farazcontrol.com واحد فروش: ۰۹۱۲۹۲۷۵۱۵۹ (مهندس رمضان زاده)