ISO9001 Quality Management System Authentication

EN650B/EN655 Series

Ver. 1.0

SHENZHEN ENCOM ELECTRIC TECHNOLOGIES CO.,LTD.

Foreword

Thank you for purchasing EN650B、EN655 series inverter developed and produced by Shenzhen Encom Electric Technologies CO., LTD!

EN650B/EN655 series hi-performance flux vector inverter adopt advanced control mode to achieve high torque, high precision and wide-range speed regulation drive, and it also support speed sensorless torque control and PG control torque. It can meet customer all kinds of requirement to universal inverter. EN650B/EN655 inverter is an organic combination for customer's universal and industrial control purpose and provide practical main-auxiliary frequency provision, run channel frequency binding, PID regulator, simple PLC, spinning traverse, programmable input &output terminal control, pulse frequency provision and inbuilt Modbus protocol and other function and platform. It provide high integration solution for most manufacturing and automation customer. EN650B is used to drive permanent magnet synchronous motor and EN655 is used to drive asynchronous motor.EN650B/EN655 inbuilt input phase loss function, output phase loss function, short circuit to earth grounding function and many other protective function to improve effectively the system reliability and safety.

This brochure provides the installation and wiring, settings, fault check and methods, maintenance and other relative issues to customer. To make inverter assemble and operate rightly, and use its high performance to best, please read this brochure carefully before installation usage and keep them well to the final users of inverter.

Please contact our office or dealer anywhere at any moment when you have any doubts or special demands in using these inverters, and you can also contact our after service center in our Headquarters directly. We will serve you with all our heart.

We reserve our right to notice you if we change contents of this manual.

Content

1 Safety Information and Use Noticepoints

To make ensure personal & equipment safety, This chapter must be read carefully before the inverter come into use.

1.1 Safety precautions

There are three kinds of safety warnings in this manual as below:

Symbol	Symbol description
	It may cause human death, Serious injury or heavy property loss with wrong operation.
	It may result body or device damage with wrong and timeless precautions under operation.
Note	Should pay extra cautions when inverter in use under this symbol

Forbid to cut off the power source directly when inverter under running, Acceleration or deceleration status. Power source could cut off when inverter completely in halt and standby status.Otherwise user should be responsible for inverter and device damage and human injury

(1) Forbid to connect AC power source to output terminal U,V,W, Otherwise it could cause inverter completely damage.
(2) Not allow for short circuit between(-)and(+), Otherwise it could cause inverter damage and power source short circuit.
(3) Forbid to install inverter on flammable objects, Otherwise it may cause fire.
(4) Do not install inverter in a environment with explosive gas, It may cause explosion.
(5) Bare connection terminal should be insulation treatment after main loop connection, Otherwise it may cause electric shock.
(6) Do not operate inverter with wet hands when inverter power on, Otherwise it may cause electric shock.
(7) Inverter earth terminal should be well grounding connection.
(8) Do not open the front cover for wiring when inverter power on. Inverter wiring and check must handle after 10 minutes of inverter power off.
(9) Wiring connection should handle by qualified person and not allow to slip any conductive objects inside inverter, Otherwise it may cause a electric shock or inverter damage.
(10) When inverter stocked for more than 6 months, Using voltage regulator to boost voltage up and keep inverter in standy status for 1 hour, Otherwise it may cause electric shock and explosion.

(1) Forbid to connect control terminals except TA, TB, TC to AC 220V/380V signal, otherwise it may cause inverter completely damage.
(2) Do not install and run inverter when inverter damage or spare part less, Otherwise it may cause fire or human injury.
(3) Inverter should install in a place where can accept itself weight, Otherwise it may cause inverter drop down or belongings damage.

1.2 Application range

(1) This kind of inverter apply to 3 phase ac asynchronous motor only for general industry.

(2) It should handle cautiously and consult with manufacturer when inverter apply to high reliability required equipment which relevant to life, Properties and safety device.

(3) This kind of inverter is the general motor control device in industry. When inverter apply to dangerous equipment, safeguard should be considerable in case of inverter failure.

1.3 Use notice points

(1) EN650B/EN655 series inverter belong to voltage type inverter, and it is normal with up temperature, noise and vibration of motor increasing over power frequency run slightly.

(2) It is required to match inverter with variable frequency motor running at low speed with constant torque for long time. When match inverter with general asynchronous motor running at low speed, It should take measures to make motor heat dissipation or monitoring motor temperature in avoid of motor flash.

(3) It is necessary to take measures in advance for the damage caused for the bad lubrication of the reduction box and wheel gear mechanical devices running at low speed for long time.

(4) It is necessary to assure at first that the use speed range of motor bearings and mechanical devices, also the increasing of motor vibration and noise should be considered, when motor run over rated frequency.

(5) It is necessary to select the suitable brake assembly for hoisting device and big inertia load to make sure the normal work when inverter stripping from power grid for the overcurrent or overvoltage failure.

(6) Inverter start and stop control through terminal or other normal command channel, otherwise it may cause inverter damage via connecting inverter input terminal to big current switch just like contactor direct to start and stop inverter frequently.

(7) It is necessary to make sure inverter cut off from operation without output, when inverter and motor connect through switch components just like contactor etc. Otherwise it will cause inverter damage.

(8) When inverter output frequency within some range, It may meet mechanical resonance point of load device, through setting jump frequency to avoid it.

(9) Checking power supply voltage within allowed working range before usage,otherwise, It need to change voltage or custom special voltage inverter.

(10) When inverter usage site altitude over1000 meters, Inverter should derate current to use, output current decrease about 10% of rated current per 1000 meters increase.

(11) Motor should do insulation check before first usage or reusage after lay aside for long time. Checking method show as Fig.1-1 below with 500V voltage type megohm meter , insulation resistance should not smaller than 5 MΩ, Otherwise inverter maybe damaged.

(12) Forbid inverter output side to assemble capacitor to improve power factor or anti-thunder dependent resistor etc, otherwise it may cause inverter fault trip or component damage show as Fig.1-2.

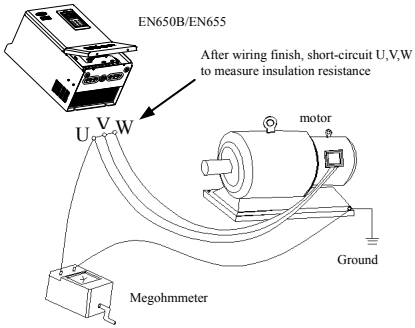

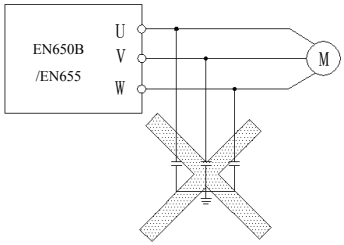

Fig.1-1 Motor insulation check **Fig.1-2 Capacitor at output forbidden**

1.4 Scraping handling notice:

Notices when handling with scrapped inverter and components:

(1) The unit: dispose the inverter as industrial waste.

(2) Electrolytic capacitor: It may cause explosion when electrolytic capacitor under burning.

(3) Plastic: It may result in harmful and poisonous gas when plastic and rubber of inverter burning, and safeguard preparations should be taken before burning.

2 Inverter type and specification

2.1 Incoming inverter inspect

(1) Check if there is damage during transportation and inverter itself has damage or fall-off parts.

(2) Check if parts presented in packing list are all ready.

(3) Please confirm nameplate data of the inverter is in line with your order requirement.

Our product is guaranteed by strict quality system during manufacturing, packing, transportation etc., Please contact our company or local agent rapidly if some careless omission or mistake arise, We'll deal with it as soon as possible.

2.2 Type explanation

EN650B – 4T 0022

Cod	Name
EN650B	Series
EN655	Series

Cod	Volt.Grade
4T	3 phase 380V

Cod	Motor(KW)
0015	1.5
0022	2.2
…	…
1600	160

Fig.2-1 Inverter model description

2.3 Nameplate explanation

Nameplate presented as Fig.2-2 with type and rating data at the bottom of inverter right side.

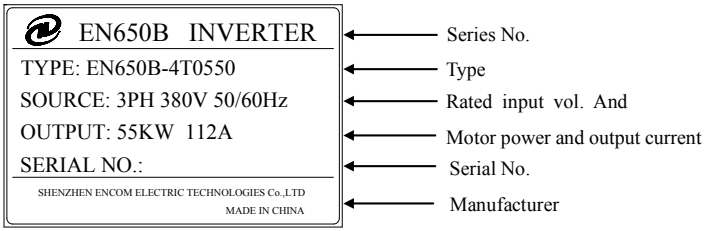

Fig.2-2 Nameplate

2.4 Inverter type explanation

Input Vol.	Inverter type	Rated output Current (A)	Adaptable motor
3 phase 380V	EN650B/EN655-4T0015	3.7	1.5
	EN650B/EN655-4T0022	5	2.2
	EN650B/EN655-4T0037	8.5	3.7
	EN650B/EN655-4T0055	13	5.5
	EN650B/EN655-4T0075	17	7.5
	EN650B/EN655-4T0110	25	11
	EN650B/EN655-4T0150	33	15
	EN650B/EN655-4T0185	39	18.5
	EN650B/EN655-4T0220	45	22
	EN650B/EN655-4T0300	60	30
	EN650B/EN655-4T0370	75	37
	EN650B/EN655-4T0450	91	45
	EN650B/EN655-4T0550	112	55
	EN650B/EN655-4T0750	150	75
	EN650B/EN655-4T0900	176	90
	EN650B/EN655-4T1100	210	110
	EN650B/EN655-4T1320	253	132
	EN650B/EN655-4T1600	304	160

2.5 Appearance and parts name explanation

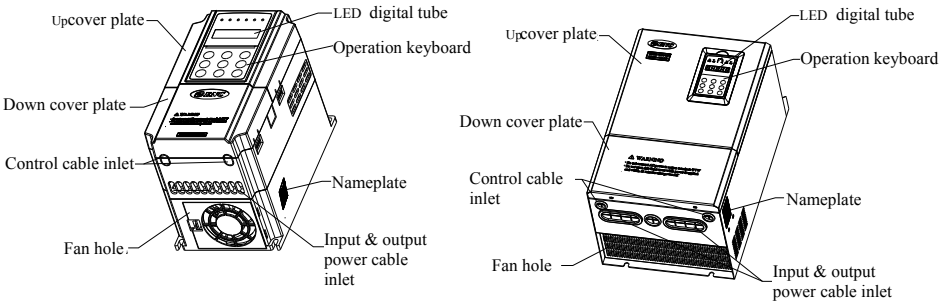

Fig.2-3 1.5KW～55KW Parts name sketch

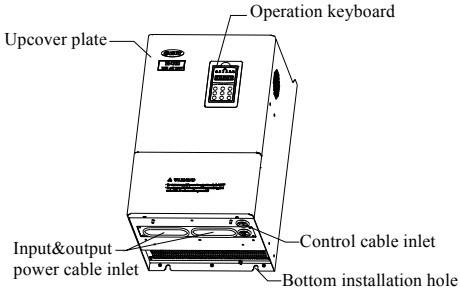

Fig.2-4 75KW～160KW Parts name sketch

2.6 Outer size

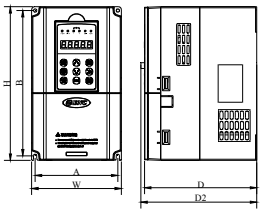

Fig.a

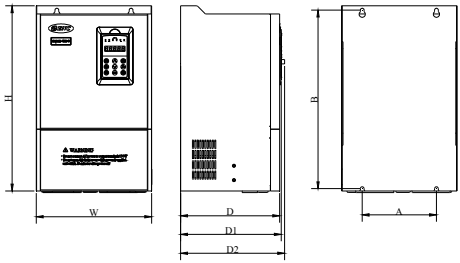

Fig.b

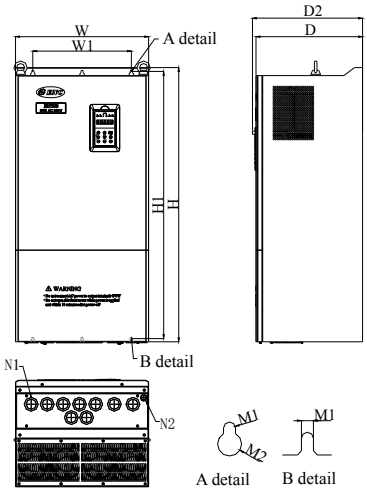

Fig.c

Fig.2-5 Outer dimension

Table 2-1 Mounting size

Model	W (mm)	H (mm)	D (mm)	D2 (mm)	A (mm)	A1 (mm)	B (mm)	W1 (mm)	D1 (mm)	Fix Hole (mm)	Fig. No.
EN650B/EN655-4T0015	115	200	151	164	104	-	186	-	-	5	Fig.a
EN650B/EN655-4T0022											
EN650B/EN655-4T0037											
EN650B/EN655-4T0055	140	240	175	188	129	-	227	-	-	5	Fig.a
EN650B/EN655-4T0075											
EN650B/EN655-4T0110	180	304	189	202	165	-	281	-	-	6	Fig.a
EN650B/EN655-4T0150											
EN650B/EN655-4T0185	250	398	210	223	180	-	382	-	-	9	Fig.b
EN650B/EN655-4T0220											
EN650B/EN655-4T0300	280	450	240	253	180	-	434	-	-	9	Fig.b
EN650B/EN655-4T0370											
EN650B/EN655-4T0450	290	530	250	263	190	-	504.5	-	-	9	Fig.b
EN650B/EN655-4T0550											
EN650B/EN655-4T0750	340	570	320	333	237	-	546	-	-	12	Fig.b
EN650B/EN655-4T0900											
EN650B/EN655-4T1100	400	650	340	353	297	-	628	-	-	12	Fig.b
EN650B/EN655-4T1320	420	650	340	353	297	-	628	-	-	12	Fig.b
EN650B/EN655-4T1600	480	980	400	413	-	370	953	-	-	9	Fig.c

2.7 Optional base

2.7.1 Inverter and base selection table

Model	Base model			
	Standard base	Base with input reactor	Base with output reactor	Base with DC reactor
EN650B/EN655-4T0750	SP-BS-0900	SP-BS-0750-LI	SP-BS-0900-LO	SP-BS-0750-LD
EN650B/EN655-4T0900		SP-BS-0900-LI	SP-BS-0900-LO	-
EN650B/EN655-4T1100	SP-BS-1100	SP-BS-1100-LI	SP-BS-1100-LO	-
EN650B/EN655-4T1320	SP-BS-1320	SP-BS-1320-LI	SP-BS-1320-LO	-
EN650B/EN655-4T1600	SP-BS-1600	SP-BS-1600-LI	SP-BS-1600-LO	-

2.7.2 Base outer dimension

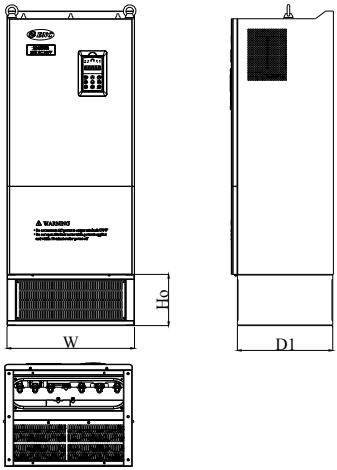

Fig.2-6 Base dimension

Table 2-2 Base size

Base model	W (mm)	D1 (mm)	Ho (mm)	Fig.
SP-BS-0900	340	300	180	Fig.a
SP-BS-0750-LI	340	300	350	
SP-BS-0750-LD				
SP-BS-0900-LI				
SP-BS-0900-LO				
SP-BS-1100	400	320	180	
SP-BS-1100-LI	400	320	380	
SP-BS-1100-LO				
SP-BS-1320	420	320	180	
SP-BS-1320-LI	420	320	380	
SP-BS-1320-LO				
SP-BS-1600-LI	480	380	400	
SP-BS-1600-LO				

2.8 Outer size of keypad and its fixing box(unit:mm)

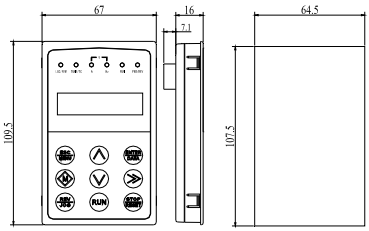

Fig.2-7 Keyboard shape and hole size

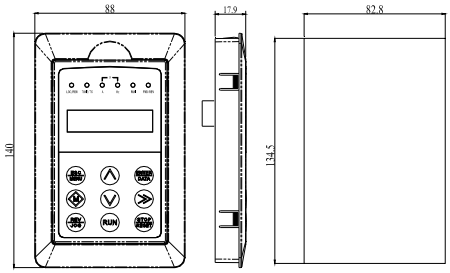

Fig.2-8 Keyboard mounting box shape and hole size

Note

(1) When other keypad outer lead, user can adjust the hole size under actual situation on keypad or keypad holder; thickness of install board between 1.0～1.5mm is suggested.
(2) When installed with keypad holder, it need to buy extra.

2.9 Product technic index and spec

Item		Item Description
Input	Rating volt., frequency	3 phase380V:3 phase380V，50Hz/60Hz
	Allowed volt. range	320～460V
Output	Volta	0～380V
	Frequency	0～500Hz
	Over loading capacity	150% of rated current for 1 minute; P type:180% of rated current for 1 minute
Control	Motor type	EN650B: Synchronous motor EN655: Asynchronous motor
	Control mode	PG-free Vector control, PG vector control, open-loop V/F control, torque control, PG torque control
	Speed range	EN650B:1:50 (PG-free vector control),1:2000 (PG vector control) EN655:1:100 (PG-free vector control),1:2000 (PG vector control)
	Start-up torque	EN650B:1.0Hz:150% rated torque (PG-free Vector control); 0Hz:180% rated torque (PG vector control); EN655: 0.5Hz:150% rated torque (PG-free Vector control); 0Hz:180% rated torque (PG vector control);
	Torque control accuracy	±8% Rated torque (PG-free Vector control, PG-free torque control); ±5% Rated torque (With PG vector control, with PG torque control).
	Torque control accuracy	±0.3% rated synchronous speed (PG-free Vector control); ±0.03% rated synchronous speed (PG vector control);
	Speed fluctuation	±0.3% rated synchronous speed (PG-free Vector control); ±0.05% rated synchronous speed (PG vector control);
	Frequency precision	Digital setting:max. Frequency×±0.01%;Analog setting:max. Frequency×±0.5%

	Frequency resolution	Analog	0.1% of max. Frequency
		Digital setting	Less than 100Hz accuracy: 0.01Hz
		Exterior	0.1% of max. Frequency
	Torque boost	Automatic torque boost; Manual torque boost 0.1 ~ 12.0%	
	V/F curve (Voltage frequency characteristics)	Select linear V/F, Multi-point V/F, Square V/F, Separate V/F and other curves	
	Acceleration	Two ways: linear acceleration and deceleration and S-curve acceleration and deceleration; 4 kinds of acceleration and deceleration time, time unit (0.01s, 0.1s, 1s) optional	
	Energy brake	For powers up to 55KW, an external braking resistor can be connected between (+) and PB if necessary. The power of 75KW and above can be connected between (+) and (-) if necessary.	
	Jog	Jog frequency range: 0Hz~ upper limit frequency; jog acceleration/ deceleration time 0.1~6500.0 seconds can be set	
	Multi-speed operation	Realized by inbuilt PLC or control terminal; with 16 section speed, each section speed with separately acceleration and deceleration time; with inbuilt PLC can achieve reserve when power down.	
	Inbuilt PID controller	Convenient to make closed-loop control system	
	Automatic energy saving run	Automatically limit current during operation to prevent excessive overcurrent fault trip	
	Naval modulation	Automatically adjust carrier based on load characteristics	
	Speed tracking restart	Achieve no impact smooth start of the rotating motor	
Running function	Run command given channel	Operation keyboard setting, control terminal setting, communication setting, can be switched in various ways	
	Running frequency given channel	The main and auxiliary are given to realize a main adjustment and a fine adjustment control. Digital reference, analog reference, pulse reference, communication reference, etc. can be switched at any time in a variety of ways	
	Bundle function	The running command channel and the frequency given channel can be bundled arbitrarily and synchronously switched.	
Input output characteristic	Digital input channel	8 universal digital input channels, maximum frequency 1KHz, 1 of which can be used as pulse input channel, maximum input 100KHz	
	Analog input channel	2 analog input channels, of which AI2 can be 0~20mA or 0~10V output	
	Pulse output channel	0.01-100KHz pulse square wave signal output, can realize the output of physical quantity such as set frequency and output frequency	
	Analog output channel	2 channels of analog signal output, optional 0~20mA or 0~10V, can realize the output of physical quantity such as set frequency and output frequency	
	Fixed length control	Fixed length control	
	Timing control	Timing control function: set the time range from 0.1Min to 6500.0Min	
Keypad	Keypad display	The parameters as setting frequency, Output frequency, Output voltage, output current can be displayed	
	Button Locked	Lock all or part of the buttons	

Protection function		Short-circuit detection, phase loss protection, overcurrent protection, overvoltage protection, under voltage protection, overheat protection, overload protection, terminal protection, power failure protection, etc.
Environ ment	Application site	Indoor, Not bare to sunlight, No dust, No corrosive gas, No flammable gas, no vapor, no water drop or salt etc.
	Altitude	Under 1000 meter. (Above 1000 meter require to reduce volume to use, output current reduce about 10% of rated current volt per 1000 meter
	Environment temperature	-10℃ ~ +40℃ (Environment temperature between 40℃～50℃, Need to reduce volume or strengthen heat sink)
	Environment humidity	Smaller than 95%RH, No drop condenses
	Vibration	(0.6g)Smaller than 5.9 M/S²(0.6g)
	Storage temperature	-40℃～+70℃
Structure	Protection grade	IP20
	Cooling mode	Forced air cooling and natural
Installation mode		Wall hanging and cabinet installation

Note

To get a perfect usage performance of the inverter, Please check and select right type according to this chapter before wiring.

It is necessary to select right type, otherwise it may cause motor abnormal run or inverter damage.

3 Installation and wiring

3.1 Installation ambient

3.1.1 The demands for installation ambient

(1) Installed in drafty indoor place,the ambient temperature should be with in -10ºC~40ºC，it needs external compulsory heat sink or reduce the volume if temperature is over than 40ºC; when temperature under -10℃, please preheat inverter first.

(2) Avoid installing in places with direct sunlight, much dust, floating fiber and metal powder.

(3) Don't install in place with corrosive, explosive gas.

(4) The humidity should be smaller than 95%RH，without condensation water.

(5) Installed in place of plane fixing vibration smaller than 5.9m/s²(0.6g).

(6) Keep away from electromagnetic disturbance source and other electronic apparatus sensible to electromagnetic disturbance.

3.1.2 Installation direction and space

(1) Normally the inverter should be mounted vertically, horizontal mounting will seriously affect heat dissipation and the inverter must be used in lower volume.

(2) Demand for minimum mounting space and distance, Please see Fig.3-1.

(3) When installing multiple inverters up and down, leading divider must be applied between them, see Fig.3-2.

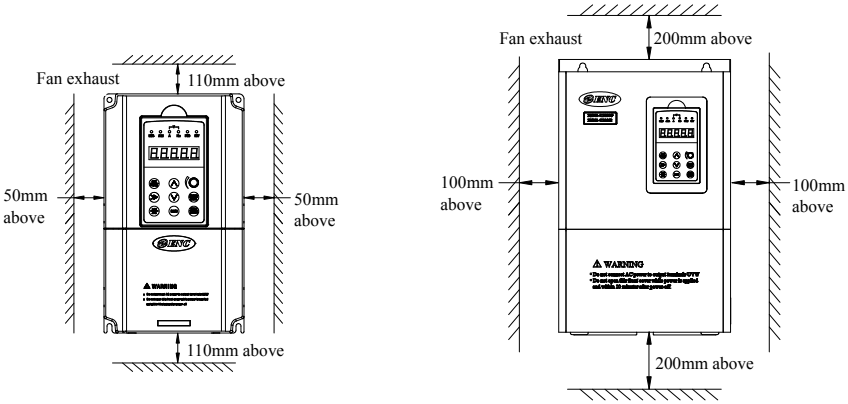

a:15KW&down power　　b：18.5KW&UP power

Fig.3-1 Mounting space

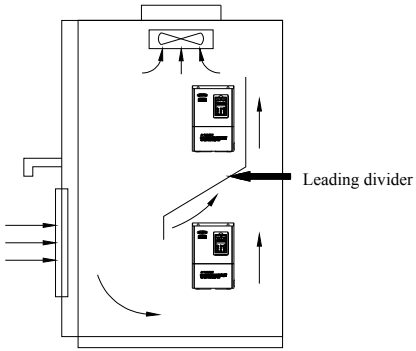

Fig.3-2 Mounting of multiple inverters

3.2 Parts disassembly and installation

3.2.1 Keyboard disassembly and installation

(1) Disassembly

Let the forefinger press finger inlet on the keypad, Depress fixing flexible plate on the top lightly, Draw it outward, then you can disassemble the keypad.

(2) Assembly

First interface the fixed hook of on the bottom of keyboard with the keyboard installation claw of inverter, then press the fixed shrapnel on the top of keyboard to push it assemble well properly (Keyboard assemble well when sounding of crisp), Show as Fig.3-3.

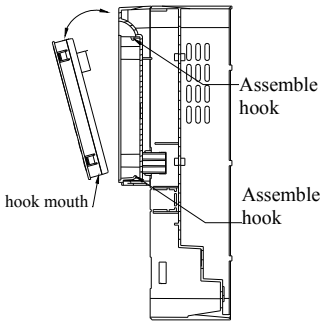

Fig.3-3 Keypad assembly

3.2.2 Cover disassembly and installation

3.2.2.1 Cover disassembly and installation

(1) Disassembly

Located the thumbs to the side bayonet, The ring fingers on the joint of the up and down cover, With thumbs press inside and pull upside at the same time until the bayonet open between cover and whole case, then pull back cover to make it off the inverter.

(2) Assembly

1> Tilt cover at 5~10 degree;

2> Interface installation claw with hook on the top of inverter, press down heavily till cover bayonet enter into the holes of two side completely, show as Fig.3-4.

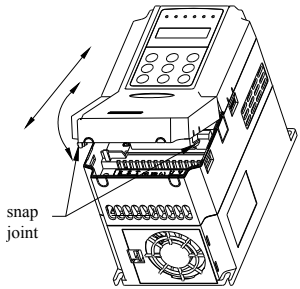

Fig.3-4 Metal cover disassemble and assembly

3.2.2.2 Metal cover disassembly and installation:

(1) Disassembly

First take off 2 screws at the side of the cover and move it a bit outward horizontally, then tilt it at 15 degree and draw it outward at the direction shown in right figure, now you can take the cover off.

(2) Assembly

First put down the cover in parallel with unit body and make it just locked at two sides of the inverter, Secondly force it ahead and make fixing part on its top inserted into fixing slot of unit body, at last screw the cover and finish assembly for the cover. As shown in Fig.3-5.

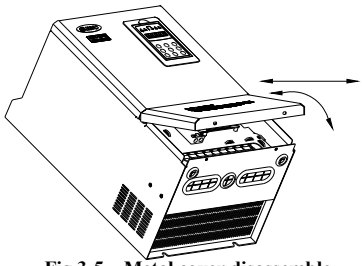

Fig.3-5 Metal cover disassemble and assembly

3.3 Wiring notice points

(1) Assure power be cut off completely for above 10 minutes before wiring, otherwise there is danger of getting electric shock.
(2) Forbid connecting power wire to output U, V, W of the inverter.
(3) If there is current leakage inside inverter, inverter and motor must be earth grounding for safety assurance, please refer to clause 8 in Chapter 3.4.1 for grounding wiring.
(4) Before shipment compression resistance test of the inverter is Passed, so users should not conduct compression resistance test again.
(5) Do not add absorbing capacitor or other resistance-capacitor absorbing device between inverter and motor; also do not add electromagnetic contact. If contactor and other switch component needed to add, please make sure inverter suspended without output, show as Fig.3-6
(6) To provide inverter over-current protection in output side and convenient maintenance under power off, it should be connected to power source through air switch and contactor.
(7) Control signal wire should select multi cores stranded wire or shielding wire. One end of the shielding layer hang in the air, and the other end connect to inverter earth grounding terminal, connection wire shorter than 20m.

(1) Make sure the inverter power supply is completely cut off.Operation keypad LED or LCD display off, Wait more then more than 10 minutes according to the model of inverter, then wiring can be done.
(2) Before inverter internal wiring, confirm that DC volt. Between main loop end P+ and P- fall down to below DC36V.
(3) Wiring can only be done by professional person trained and qualified.
(4) Before power on, check if voltage grade of the inverter is in line with that of power supply volt., otherwise will cause personnel injured and device damaged.

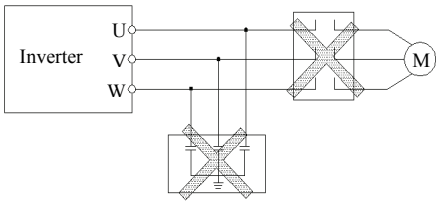

Fig.3-6 Forbid use contactor and absorbing capacitor

3.4 Main loop terminal wiring

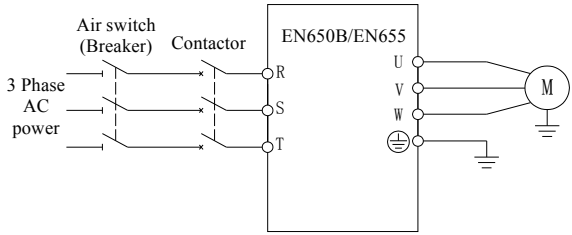

Fig.3-7 Main loop simple wiring

To keep user power grid safety, please choose proper air switch, breaker, wiring at power input side, Parameter recommended show as Table 3-1 **(Remark: Wire must choose PVC insulation copper conductor)**.

Table 3-1 Parameter recommended for air switch(Breaker), contactor and wire selection

Type	Air switch or breaker (A)	Contactor (A)	Input power wire mm^2	Output motor cable mm^2	Control signal wire mm^2
EN650B/EN655-4T0015	10	12	0.75	0.75	0.5
EN650B/EN655-4T0022	16	18	1.5	1.5	0.5
EN650B/EN655-4T0037	16	18	1.5	1.5	0.5
EN650B/EN655-4T0055	20	25	2.5	2.5	0.75
EN650B/EN655-4T0075	25	25	4.0	4.0	0.75
EN650B/EN655-4T0110	32	32	6.0	6.0	0.75
EN650B/EN655-4T0150	40	40	6.0	6.0	0.75
EN650B/EN655-4T0185	50	50	10	10	1.0
EN650B/EN655-4T0220	50	50	10	10	1.0
EN650B/EN655-4T0300	63	63	16	16	1.0
EN650B/EN655-4T0370	80	80	25	25	1.0
EN650B/EN655-4T0450	100	115	35	35	1.0
EN650B/EN655-4T0550	125	125	50	50	1.0
EN650B/EN655-4T0750	250	160	70	70	1.5
EN650B/EN655-4T0900	250	160	75	75	1.5
EN650B/EN655-4T1100	350	350	120	120	1.5

EN650B/EN655-4T1320	400	400	120	120	1.5
EN650B/EN655-4T1600	500	500	150	150	1.5

3.4.1 Connection between inverter and fitting parts

(1) Breaking device like isolation Switch must assemble between power source and inverter to keep persona safety under repairing and inverter requirement for compulsory power off.
(2) There must be over-current Protection breaker or fuse in inverter power supply circuit to avoid failure expanding because of the second device failure.
(3) AC input reactor
When high harmonics between inverter and power supply is strong which cannot meet system requirement or input side power factor need to improve, ac input reactor can be added.
(4) Contactor is used to power supply only, do not use it to control inverter start and stop.
(5) Input side EMI filter
hoosing optionally EMI filter to restrain high frequency transduction interference and radio-frequency interference from inverter power line.
(6) Output side EMI filter
Choosing optionally EMI filter to restrain radio-frequency Interference and wire leakage current from inverter output side.
(7) AC output reactor
Installing AC output reactor is suggested to avoid motor insulation damage, oversize current leakage and inverter frequent protection when connecting wire between inverter and motor exceeds 50m.
(8) Safety earth ground wire
Inverter and motor must be earth ground connection, connection wire should select as shorter and thicker as above 3.5mm² multicore copper wire, and earth grounding resistance smaller than10Ω.

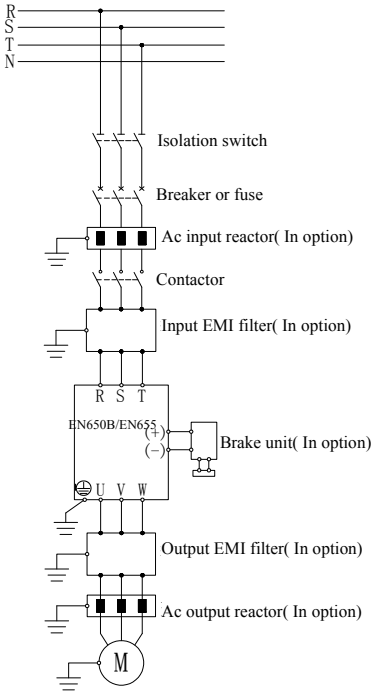

Fig.3-8 Connection of inverter and fitting parts

3.4.2 Main loop terminal wiring

(1) Main loop input output terminal show as Table 3-2.

Tbale 3-2 Main loop input output terminal description

Type	Main loop terminal	Terminal	Functions
EN650B/EN655-4T0015 ~ EN650B/EN655-4T0150	R S T (+) PB (-) U V W ⏚	R、S、T	3 phase AC input terminal, connect power source
		(+)	DC volt. Positive terminal
		PB	External connect to brake resistor reverse terminal
		(-)	DC volt. Negative terminal

		(+)、(-)	External connect brake unit
		U、V、W	3 phase AC output terminal, Connect to motor
		⏚	Grounding terminal
EN650B/EN655-4T0185 EN650B/EN655-4T0220	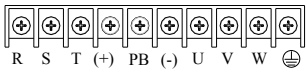	R、S、T	3 phase AC input terminal, connect power source
		P、(+)	External connect to brake resistor reverse terminal
		(+)	DC volt. Positive terminal
		PB	External connect to brake resistor reverse terminal
		(-)	DC volt. Negative terminal
		(+)、(-)	External connect brake unit
		U、V、W	3 phase AC output terminal, connect to motor
		⏚	Grounding terminal
EN650B/EN655-4T0300 EN650B/EN655-4T0370	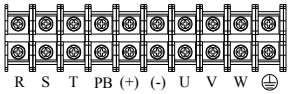	R、S、T	3 phase AC input terminal, connect power source
		P、(+)	External connect to brake resistor reverse terminal
		PB	External connect to brake resistor reverse terminal
		(+)	DC volt. Positive terminal
		(-)	DC volt. Negative terminal
		(+)、(-)	External connect brake unit
		U、V、W	3 phase AC output terminal, connect to motor
		⏚	Grounding terminal
EN650B/EN655-4T0450 EN650B/EN655-4T0550	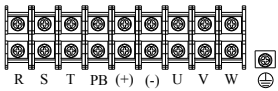	R、S、T	3 phase AC input terminal, connect power source
		P、(+)	External connect to brake resistor reverse terminal
		PB	External connect to brake resistor reverse terminal
		(+)	DC volt. Positive terminal
		(-)	DC volt. Negative terminal
		(+)、(-)	External connect brake unit
		U、V、W	3 phase AC output terminal, connect to motor
		⏚	Grounding terminal
EN650B/EN655-4T0750	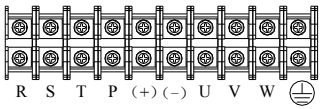	R、S、T	3 phase AC input terminal, connect power source
		(+)	DC volt. Positive terminal
		(-)	DC volt. Negative terminal
		P、(+)	External connect to brake resistor reverse terminal
		(+)、(-)	External connect brake unit

		U、V、W	3 phase AC output terminal, connect to motor
		⏚	Grounding terminal
EN650B/EN655-4T0900 ~ EN650B/EN655-4T1320	R S T (+) (-) U V W ⏚	R、S、T	3 phase AC input terminal, connect power source
		(+)	DC volt. Positive terminal
		(-)	DC volt. Negative terminal
		(+)、(-)	External connect brake unit
		U、V、W	3 phase AC output terminal, connect to motor
		⏚	Grounding terminal
EN650B/EN655-4T1600	R S T (+) U V W (-) ⏚	R、S、T	3 phase AC input terminal, connect power source
		(+)	DC volt. Positive terminal
		(-)	DC volt. Negative terminal
		(+)、(-)	External connect brake unit
		U、V、W	3 phase AC output terminal, connect to motor
		⏚	Grounding terminal

The wiring of main loop must connect right according to the description above. Wrong wiring will cause device damage and personal injury.

3.5 Basic running wiring diagram

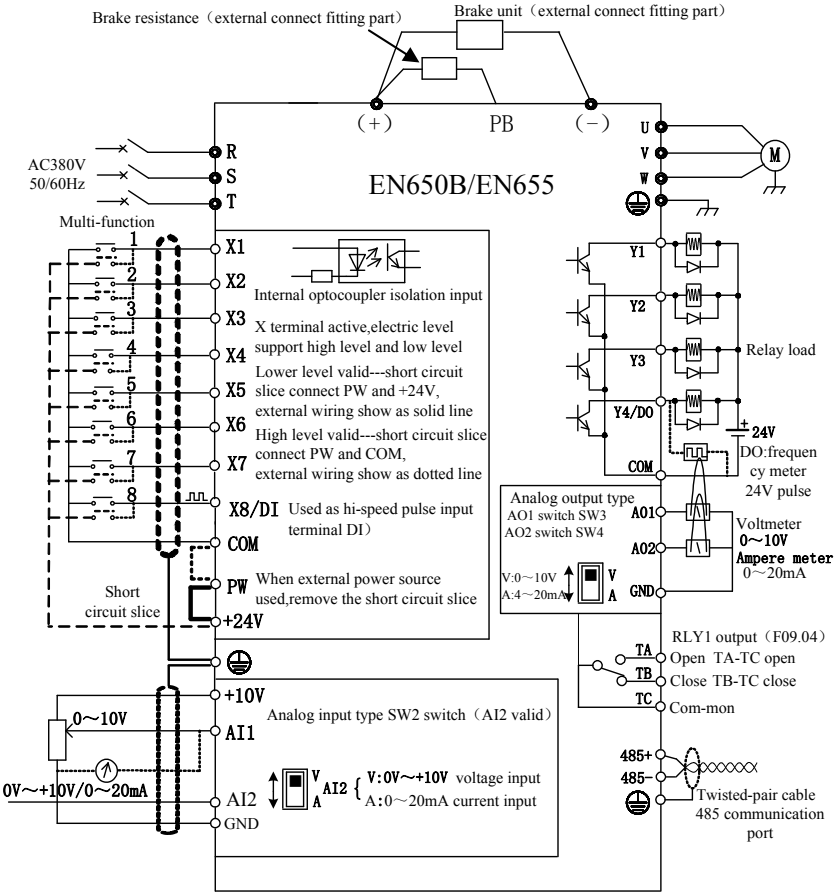

Fig.3-9 Basic wiring diagram

Note: When external DC reactor is connected, please remove the short copper bar between P and (+).

3.6 Control loop collocation and wiring

3.6.1 Relative location and function for control board terminal and slide switch:

Control board terminal and slide switch location show as Fig 3-10.

The terminal J11,J13 and J15 are used by the manufacturers, J10 is extended interface,J12 is for keypad, The J8,J9 and J5 for users can be seen in table 3-3, The setting description and function of slide switch check Table 3-4. Please read the following descriptions carefully before using inverter.

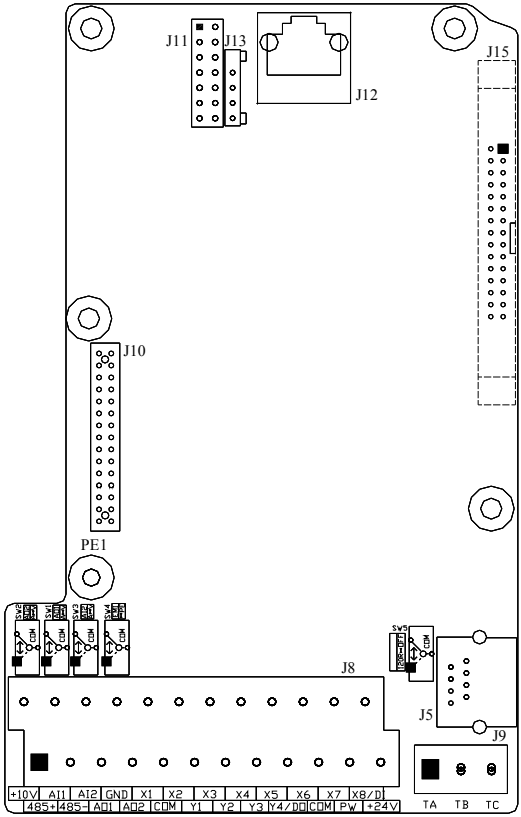

Fig.3-10 Sketch map of CPU board

Table3-3 Function description of terminal provided for user

No.	Function	Description
J8	Input and output control of external terminal	To use when inverter run under external terminal control , refer to 3.6.2

J9	Signal output of RLY1	TA-TC is normal open contact；TB-TC is normal closed contact，refer to 3.6.2
J5	CrystalRS485communication interface	To use when inverter through 485 communication can achieve cascade connection and other control, refer to 3.6.2

Table 3-4 Slide switch function description for users

No.	Function	Setting	Default value
SW1	AO1 Analog output signal selection	V：0～+10V voltage signal output	0～+10V
SW2	AO2 Analog output signal selection	I：0～20mA current signal output	
SW3	AI2 Analog input signal selection	V：0～+10V voltage signal input I：0～20mA current signal input	0V～+10V
SW4	EMI inhibition for selection terminal	：Earth grounding ：Suspending	Suspending
SW5	RS485 Terminal resistor selection	：Disconnect ：Connectionr	Disconnect

Note

(1) In the graphic of slide switch, black square means switch slidable location.
(2) Only when heavy interfering exist on working site, it's suggested to put EMI dial switch to earth grounding location, and ⏚ should connect to the earth.

3.6.2 Descriptions for control board terminal

(1) J8 and J9 terminal layout as following

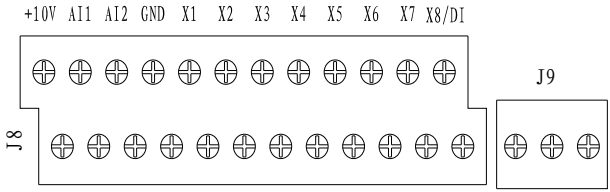

(2) CN3 and CN4 terminal function description show as Table 3-5.

Table3-5 Function table for control board terminal

Type	Symbol	Description	Terminal Function and specification
Multfunction input terminal	X1	Multifunction input 1	Input voltage range:15～30V； Opto coupler isolation, Compatible with bipolar input; Input impedance:2.4KΩ max input frequency:1KHz
	X2	Multifunction input 2	
	X3	Multifunction input 3	
	X4	Multifunction input 4	
	X5	Multifunction input 5	
	X6	Multifunction input 6	
	X7	Multifunction input 7	
	X8/DI	Multifunction input 8/ high-speed pulse input	Except for X1～X7 function，it can be used as hi-speed pulse input. Input impedance:2.4KΩ Maximum input frequency:100KHz
Power	+24V	+24V power source	Provide +24V power to external device（24±4V） Maximum output current：200mA
	PW	External power source input	Factory default connect to +24V; when use external signal to drive X terminal，it need to connect to external power supply,and disconnect from the +24V power terminal.
	+10V	+10V power source	Provide +10Vpower to external device (10±0.5V) Maximum output current:50mA
	COM	Common interface	Reference ground for digital signal and +24V
	GND	Common interface	Reference ground for analog signal and +10V
Analog input	AI1	Analog input 1	Input range: DC 0V～10V。 Input impedance: Voltage input at 20KΩ； Resolution: 1/4000
	AI2	Analog input 2	Input range: DC 0～10V/0～20mA，selected by SW1 dial switch on control board. Input impedance: Voltage input at 20KΩ；current input at500Ω。 Resolution: 1/4000
Analog output	AO1	Analog output 1	Voltage or current output is selected by SW1 (AO1)and SW2(AO2) dial switch on control board. Output voltage range: 0～10V Output current range: 0～20mA
	AO2	Analog output 2	
Multi- function output	Y1	Open circuit collector output 1	Opto coupler isolation output, Unipolar Open circuit collector output Max voltage output: 30V Max current output: 50mA
	Y2	Open circuit collector output 2	
	Y3	Open circuit collector output 3	
	Y4/DO	Open circuit collector	Function code F09.38 to select terminal output

		output 4/ High-speed impulse output	mode. When Open circuit collector output, with the same spec as terminal Y. When High-speed impulse output, the max frequency is 100KHz.
RLY1 out	TB—TC	Normal closed	Contact capacity：AC250V/2A (cosφ=1) AC250V/1A (cosφ=0.4) DC30V/1A
	TA—TC	Normal open	
Communication	485+	485 differential signal	485 differential signal positive terminal
	485-		485 differential signal negative terminal
Auxiliary interface	J10	retain	
	J5	StandardRS485 communication interface	Twisted-pair cable or shield wire to connect

(3) RS485 crystal outlet J5 layout as following

RS485 terminal J5 layout								
No.	1	2	3	4	5	6	7	8
Name	485+	485-	-	-	-	-	-	-

3.6.3 Analog input&output terminal wiring

(1) AI1 receive analog voltage or current signal single-ended input, Wire as below:

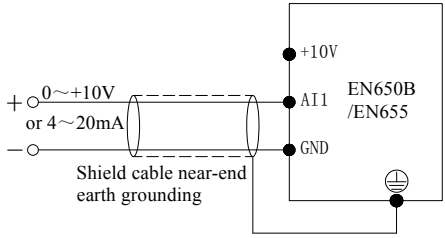

Fig.3-11 AI1 terminal wiring diagram

(2) AI2 receive analog voltage or current signal single-ended input, switch through SW3, wire as below:

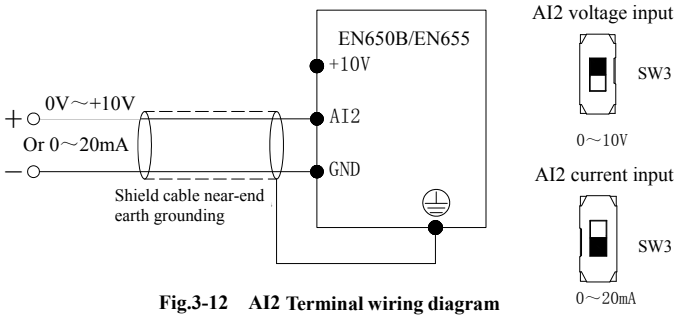

Fig.3-12 AI2 Terminal wiring diagram

(3) AO1,AO2 terminal can connect to external analog meter, which can indicate several physical quantity，it can select analog voltage or current signal output，and switch through SW1 and SW2，wire as below：

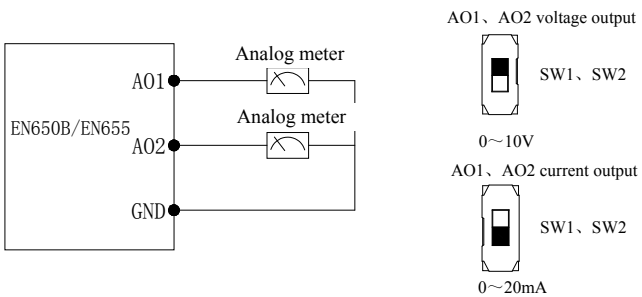

Fig.3-13 AO1、AO2 Terminal wiring diagram

Note

(1) Under analog input mode, filter capacitor or common mode choke can be installed between AI1 and GND or AI2 and GND.
(2) Analog input and output signal can be interfered easily by ambient environment, it need use shield cable for connection and earth grounding well as short as possible.

3.6.4 Digital input terminal wiring

(1) To use inverter inbuilt +24V power supply, and NPN source type external controller connection mode.

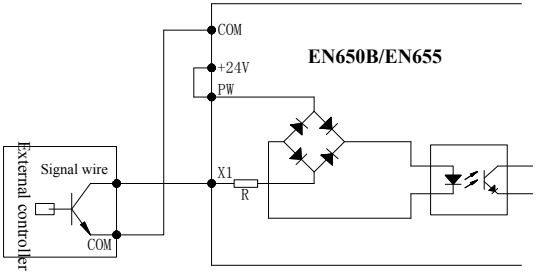

Fig.3-14 Inbuilt 24V source type connection mode

(2) To use inverter inbuilt +24V power supply, and PNP drain type externalcontroller connection mode.

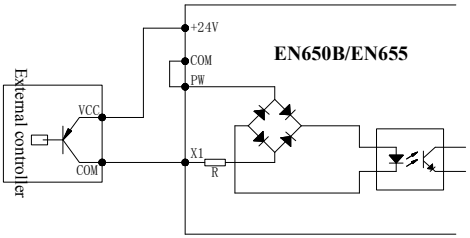

Fig.3-15 inbuilt 24V drain type connection mode

(3) To use external DC 15～30V power supply, and NPN source type external controller connection mode.(remove the short circuit slice between PW and+24V)

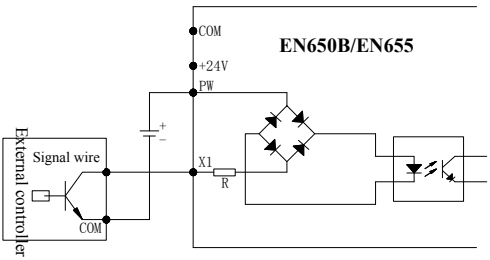

Fig.3-16 External power supply source type connection mode

(4) To use external DC 15～30V power supply,and PNP drain type external controller connection mode.（remove the short circuit slice between PW and +24V)

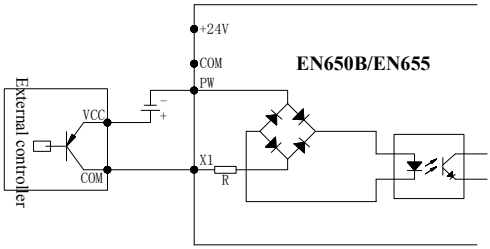

Fig.3-17 External power supply drain type connection mode

3.6.5 Communication terminal wiring

EN650B/EN655 inverter provide RS485 serial communication interface to user.

The following wire connection can make up of single-main single-sub control system or single-main multi-sub control system. To use host computer softwar (PC or PLC controller) can realize real time monitoring and operation to inverter, and to achieve complicated run control like long-distance control, high degree automation. It can also use a host inverter and the other slave inverter to make up of the cascade or synchronous control inverter network.

(1) Inverter RS485 interface and other device with RS485 interface wire connection show as following

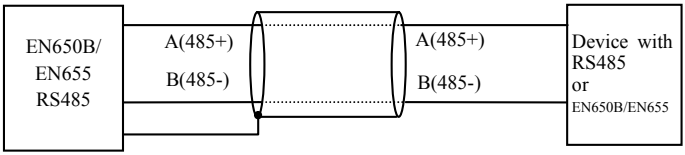

Fig.3-18 Communication terminal wiring

(2) Inverter RS485 interface and host computer (Device with RS232 interface) connection:

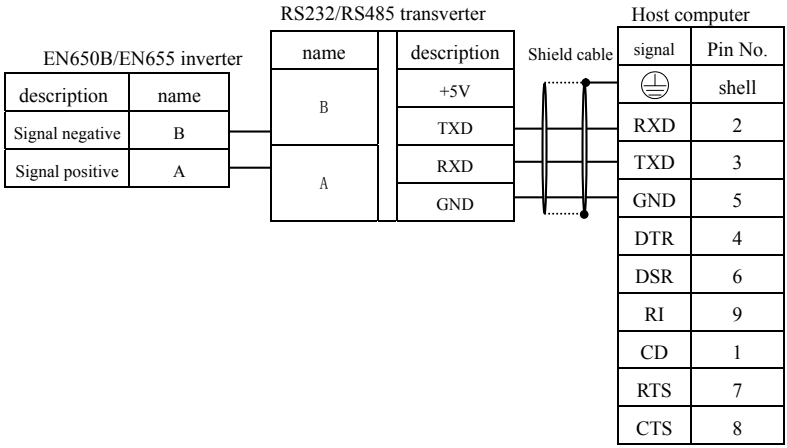

Fig.3-19 RS485 communication wiring

4 EMC（Electromagnetic compatibility）explanation

Because of inverter working principal resulting in electromagnetic noise, and to avoid or reduce inverter interference to ambient environment, this chapter introduce installation means to restrain interference from aspect of interference restrain, field wiring, system earth grounding, leakage current and power filter usage. Inverter will have good electromagnetic compatibility under general industrial environment, when user install the inverter according to this chapter.

4.1 Noise interference restraining

Inverter interference generating for run may have effect to nearby electronic device and the effect depend on the inverter installation surrounding electromagnetic environment and the restrain interference ability of the device.

4.1.1 Interference noise type

Because of inverter working principle, There are mainly 3 kinds of noise interference source:

(1) Circuit conduction interference;

(2) Space emission interference;

(3) Electromagnetic induction interference;

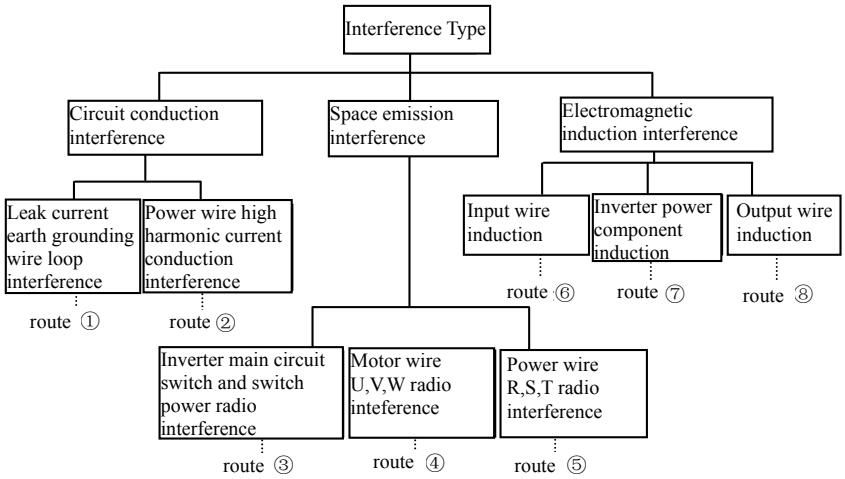

Fig.4-1 Interference noise type

4.1.2 Basic countermeasure for restrain interference

Table 4-1 Interference restrain countermeasure

Noise spread road	Countermeasure of weakening effect
①	Earth grounding cable of peripheral device and inverter wiring make up of the closed-loop and leakage current of inverter earth grounding cable will make device perform wrong action. It will decrease wrong action when device not connect to earth grounding.
②	When the power of peripheral device and inverter power belong to the same power source, High orders harmonic gererating by inverter will transmit the voltage and current along with the power line which will interfere other devices within the same power source system. Take some restraining measures as below：install electromagnetic noise filter at inverter input end; use isolation transformer to isolate other devices; connect power end of peripheral device to remote power grid ; add power ferrite filter magnetic ring to inverter R、S、T three phase wire to restrain high harmonic current conduction
③④⑤	● Keep other sensitive devices and signal wire installed away from inverter. It should use shield wire and make the shield layer single end earth grounding. Besides keep distance from inverter and its input & output wire as possible as. When signal wire need to intersect with strong current cable, it should make them orthogonal crossing not parallel. ● Install high frequency noise filter (Ferrite common code choke, also called magnetic ring)at the bottom end of the inverter input &output to restrain radio frequency interference of dynamic wire effectively. ● Motor cable should be placed in protective object with largen thickness, such as placed in larger thickness (over 2mm) pipeline or buried in cemented tank. Putting dynamic wire in metal tube and connect to earth grounding with shield wire (motor cable use 4-core cable, One side is earthed through the inverter, the other side connected to motor casing).
⑥⑦⑧	To prevent wire parallel or bundled of strong and weak current, it should keep away from inverter assemble device, and wiring should away R,S,T,U,V,W power line from inverter. Devices with highfield and high magnetic field should notice the corresponding installation position of inverter and keep distance and orthogonal crossing.

4.2 Field wiring and earth grounding

(1) Inverter terminal motor connection wire (U,V,W terminal output wire) and inverter terminal power connection wire (R,S,T terminal input wire) should keep distance enough as possible as can.

(2) U,V,W terminal 3 motor wires should be placed in metal tube or metal wiring tank as possible as.

(3) Generally control signal wire should use shield cable, When shield layer connect to inverter ⏚ terminal, It should be the single end earth grouding which closed to inverter side.

(4) Inverter ⏚ terminal earth grounding cable must directly connect to floor, It cannot connect to earth grounding through other device, and the location of earth grounding should close to inverter as possible as.

(5) Strong current cable (R,S,T,U,V,W) cannot parallel wiring closely with control signal wire, and bundled together is prohibited. It should keep distance from over 20 ~ 60 cm (Relative to strong current size). When it's necessary to intersect, it should be orthogonal crossing, show as Fig.4-2.

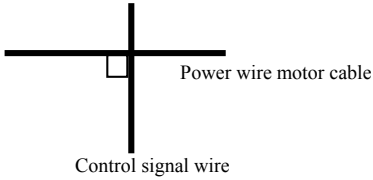

Fig.4-2 System wiring demand

(6) Earth grounding wire for strong current should separately connect to earth grounding with control signal and sensor earth grounding wire for weak current.

(7) Forbid to connect inverter input terminal (R,S,T) to other devices.

4.3 Leak current and countermeasure

The leak current flows through inverter input and output terminal for wire capacitance and motor capacitance, and its size decided by the distributed capacitance and carrier frequency. There are two kinds of leak current: leak current to earth and wire-to-wire. Restraining methods as below:

(1) Diminish the cable length between inverter and motor.

(2) Install ferrite magnetic ring or output reactor at the inverter output terminal.

When reactor installed with rated voltage drop more 5% and long wiring to U,V,W terminal it would reduce motor's voltage apparently. When motor run at full load, it is possible to flash motor, and it should be used by derating or boosting input and output voltage.

(3) As carrier frequency low, the motor noise would increase accordingly.

4.4 Installation demand for electromagnetic on-off electronic device

It should pay attention that surge absorber must be installed when electromagnetic on-off electronic device like relay, electromagnetic contactor and electromagnetic iron generating noise easily and largely installed near to inverter or in the same control cabinet, show as Fig. 4-3.

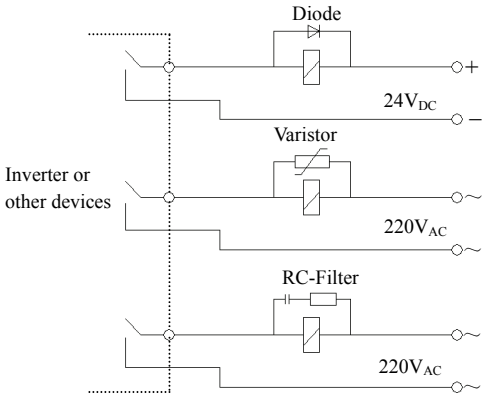

Fig.4-3 Install demand for electromagnetic on-off device

4.5 Noise filter installation instructions

(1) To use strictly as per the rated value; Filter metal casing grounding must connect reliably to assemble cabinet metal grounding in large scale and It required good conductive continuity. Otherwise, It may cause electric shock and influence the EMC effect seriously.

(2) Filter grounding terminal and inverter ⏚ terminal must connect to the same common earth grounding, Otherwise it will influence the EMC effect seriously.

(3) Filter installed as close as possible to inverter power input terminal.

5 Run and operation explanation for inverter

5.1 Run of Inverter

5.1.1 Running order channels

There are 3 kinds of order channel for controlling run action of the inverter such as run, stop, jog etc:

0: Keypad

Control by key RUN 、STOP/RESET 、REV/JOG on keypad (Factory default).

1: Control terminal

Use two of the control terminals X1 to X8 to form a two-wire control with COM, or use three terminals X1 to X8 to form a three-wire control.

2: Communication port

Control run and stop of the inverter through upper machine or other device which can communicate with the inverter.

Choose order channel by setting function code F01.15; and also can choose by multi-function input terminal (F08.18~F08.25 choose function 20,37). Also can reach switch the command channel through multi-function key (Only parts of optional keyboards are equipped with multi-functional key)

> Please make switching debugging in advance when switch the order channel to check if it can fulfill system requirement, Otherwise have danger of damaging device and injuring personal.

5.1.2 Frequency-provision channel

EN650B/EN655 includes main frequency provision and assist frequency provision:

Main frequency provision:

0: Digital setting (No memory when power down);
1: Keypad analog potentiometer provision;
2: AI1 analog setting;
3: AI2 analog setting;
4: Reserved;
5: PULSE pulse setting (X8);
6: Multi-segment instruction;
7: Simple PLC;
8: PID;
9: Communication given;

5.1.3 Run and operation explanation for inverter

There are 3 kinds of order channel for controlling run action of the EN650B/EN655 inverter such as run, standby state and parameter tuning state

Standby mode: After the inverter is powered on, if the running command is not input, or the stop command is executed during the running, the inverter will enter the standby state.

Run state: When the run command is received, the inverter enters the running state.

Parameter tuning state: After receiving the parameter identification command, enter the parameter setting state, and enter the shutdown state after the tuning.

5.1.4 Run mode

EN650B/EN655 Inverter have 6 kinds of run mode, following is in turn according to their priority, jog run → closed-loop run → PLC run → multi-section speed run → Swing frequency run →common run. Shown as Fig.5-1.

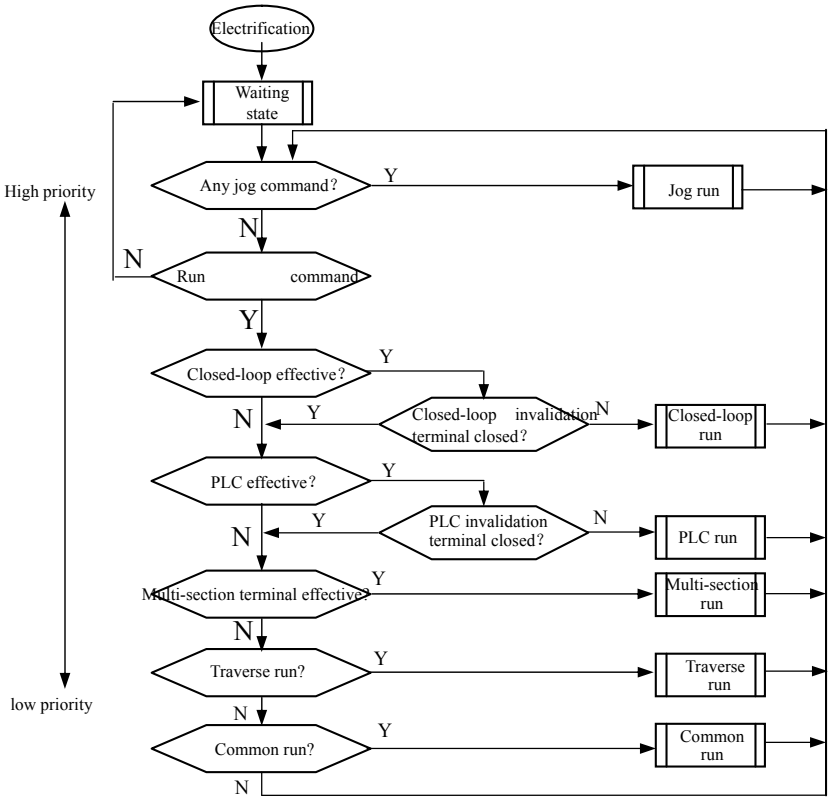

Fig.5-1 Run mode

0: Joy run

Upon receiving jog run command (For instance,Press REV/JOG key on keypad）during waiting state,The inverter run at jog frequency(See function code F01.25～F01.29)

1:Closed-loop run

The inverter will come into closed-loop run mode when closed –loop run control effective parameter is set (F01.00=8). Namely carry on PID adjustment to specified value and feedback value (proportion integral differential calculation see F11 group function code) and PID adjuster output is inverter output frequency. Can make closed-loop run mode ineffective and switch to lower level run mode by multi-function terminal (Function 22).

2: PLC run

The inverter will enter into PLC run mode and run according to run mode preset (F01.00=7) through setting PLC function effective parameter(F10).

3: Multi-section speed run

By nonzero combination of multi-function terminal(12,13,14,15,function),choose multi-section frequency 0~15(F10.36～F10.51) to run at multi-section speed.

4: Swing frequency run

The inverter will enter into swing frequency run mode when swing frequency function effective parameter (F13.00, not 0) is set. Set relevant swing frequency run special parameter according to textile swing frequency craft to realize swing frequency run.

5: Common run

Common open loop run mode of general inverter.

In above 6 kinds of run mode except “jog run” the inverter can run according to kinds of frequency setting method.

5.2 Operation and use of key board

5.2.1 Keypad layout

The operating keyboard is the main unit of frequency inverter to accept commands, display parameters. Keyboard outline diagram shown in Fig.5-2.

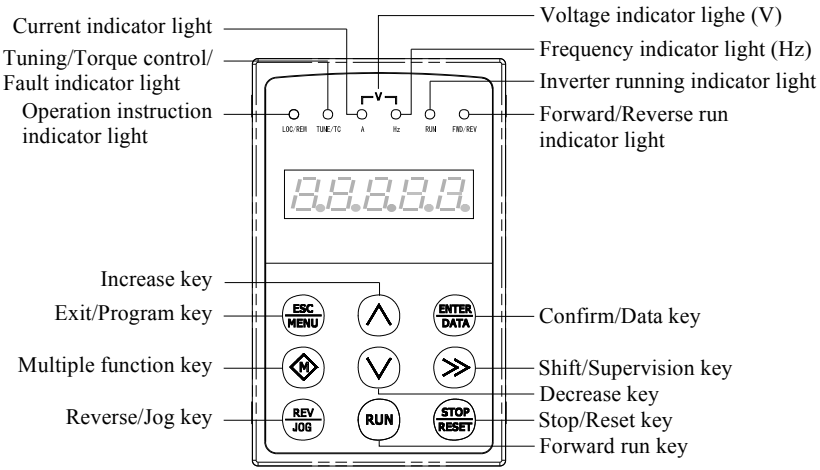

Fig.5-2 Keypad layout sketch

5.2.2 Keypad function description

There are 8 key-presses on inverter keypad， and function definition of each key is as shown in table 5-1.

Table 5-1 Keypad function table

Key	Name	Function description
ESC MENU	Program/Exit key	Enter into or exit programming state
>>	Shift/Supervision key	Can choose modification digit of set data under editor state;can switch display status supervision parameter under other state
ENTER DATA	Function/Data key	Enter into or exit programming state
REV JOG	Rev/Jog key	Under keypad mode: to press this key can set reverse run or Jog run according to the 1st bit of parameter F00.16
RUN	Run key	Enter into forward run under keypad mode
STOP RESET	Stop/reset key	In common run status the inverter will be stopped according to set mode after pressing this key if run command channel is set as keypad stop effective mode. The inverter will be reset and resume normal stop status after pressing this key when the inverter is in malfunction status.
M	Multi-function button	The specific function of this button is determined by F00.15. For details, please refer to the parameter description of F00.15.
∧	Increasing button	To increase data or function code (To press it continuously can improve increasing speed)
∨	Decreasing button	To decrease data or function code (To press it continuously can improve decreasing speed)

5.2.3 LED and indicator light

4 status indicator light: they are MOD(mode): LOC/REM、TUNE/TC、RUN、FWD/REV on the LED: their respective indicating meaning is as shown in table 5-2.

Table 5-2 Status indicator light description

Item			Function description
Display function	Digital display		Display current run status parameter and set parameter
	Status indicator light	A、Hz、V	Unit for relevant current digital displayed physical parameter(for current is A:for voltage is V:for frequency is Hz)
		LOC/ REM	Light off: panel start and stop control mode Light on: terminal start and stop control mode Blinking light: communication start and stop control mode
		TUNE/ TC	Light off: The inverter is running normally Light on: torque control mode The light flashes slowly (1 time/sec): tuning state The light flashes quickly (4 times/sec): fault status
		RUN	Light off: The inverter is stopped Light on: the inverter is running
		FWD/ REV	Light off: Forward running, indicating that the inverter outputs positive phase sequence. When the motor is connected, the motor rotates forward. Light on: Reverse running, indicating that the inverter output reverse phase sequence. When the motor is connected, the motor reverses.

5.2.4 Key board display status

EN650B/EN655 keypad display status is classified as Waiting status parameter display; Function code parameter editing status display;Malfunction alarm status display; Run status parameter display; Alarm state display in total 5 kinds of status. LED indicator light will all be lit after the inverter electrified. Then enter into set frequency display. As shown in Fig.5-3 a.

(1) Waiting parameter display status

The inverter is in standby state, and the operating keyboard displays the standby status monitoring parameters. As shown in Fig.5-3 b, the unit indicator shows the unit of the parameter.

To press (>>) key, it can display different waiting status supervision parameter circularly: for detail please see C-00 to C-05 group supervision parameter details decide by F00.07~F00.12.

(2) Run parameter display status

The inverter enters into run status when receiving effective run command.Operating keyboard displays the operating status monitoring parameters.As shown in Fig.5-3 c, The indicator light shows the unit of the parameter.

To press (>>) key, it can display run status supervision parameter circularly. For detail please see C-00 To C-05 group supervision parameter details decide by F00.01～F00.06 .

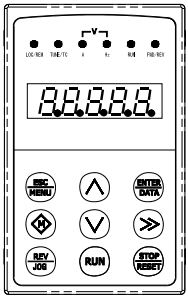

Fig.a Electrification, display 8.8.8.8.8.

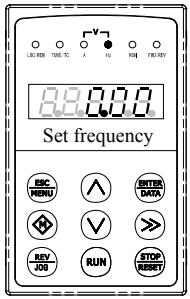

Fig.b Waiting status, display waiting status parameter

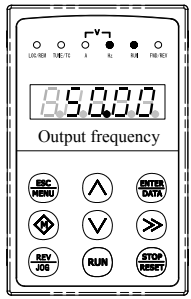

Fig.c Run status: display run status parameter

Fig.5-3 Inverter electrification: waiting: run status display

(3) Failure alarm display status

The inverter enters into failure alarm display status upon detecting failure signal and display failure code sparklingly(as shown in Fig.5-4); To press (>>) key can look over relative parameter after stopping running; Can press (ESC MENU) key to enter into program status to see about F26 group parameter if want to search failure information.Can carry on failure restoration by (STOP RESET) key: control terminal or communication command on the keypad after troubleshooting. Keep displaying failure code if failure exist continuously.

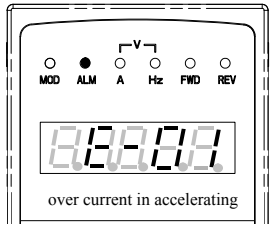

Fig.5-4

For some serious failure, such as The earthing short circuit, Inverter modules protect, over current, over voltage etc., must not carry on failure reset forcibly to make the inverter run again without failure elimination confirmed. Otherwise have danger of damaging the inverter!

(4) Function code editing status

Under waiting, run or failure alarm status, press (ESC MENU) key, can enter into editing status(If user password is set, can enter into editing status after inputting the password, see also F27.00 description and Fig.5-11), and editing status is displayed according to three classes menu mode, as shown in Fig.5-5.To press (ENTER DATA) key can enter into one class by one class. Under function parameter display status, to press (ENTER DATA) key to carry on parameter storage operation; To press (ESC MENU) key can only come back to upper class menu without storing modified parameter.

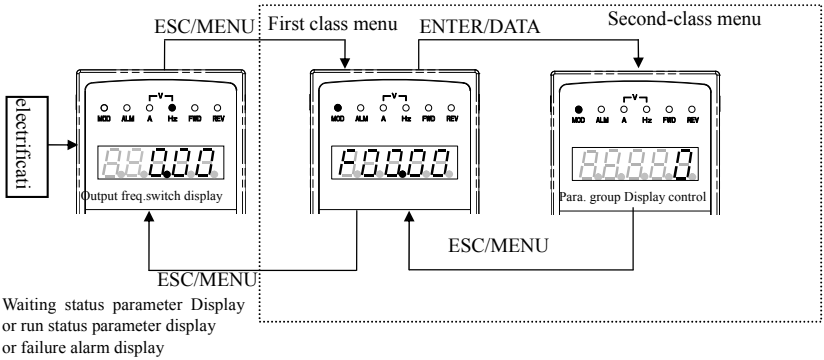

Fig.5-5 Keypad display status switching

(5) Alarm state display

When under running and standby situation:It means enter failure alarm display status upon detecting failure signal and display failure code sparklingly (Fig.5-6) Inverter keeping running state But this alarm display can not be reset button eliminated: After only find the cause of the alarm: in order to eliminate this factor Normal.

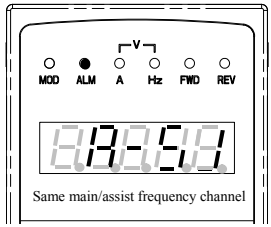

Fig.5-6

5.2.5 Method for operating keypad

Can carry on various operation to the inverter through keypad, For example:

(1) Status parameter display switching:

After pressing key (>>), Display C group status supervision parameter; after displaying one supervision parameter code for 1 second will display this parameter value automatically. Press key (ENTER DATA) will go back to supervision interface.

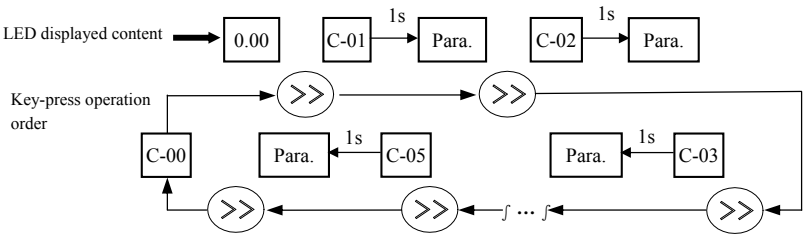

Fig.5-7 Waiting status parameter display operating example

(2) Function code parameter setting

Take function code F01.01 modified from 5.00Hz to 6.00Hz as example.Boldface in Fig.5-8 shows flickering digit.

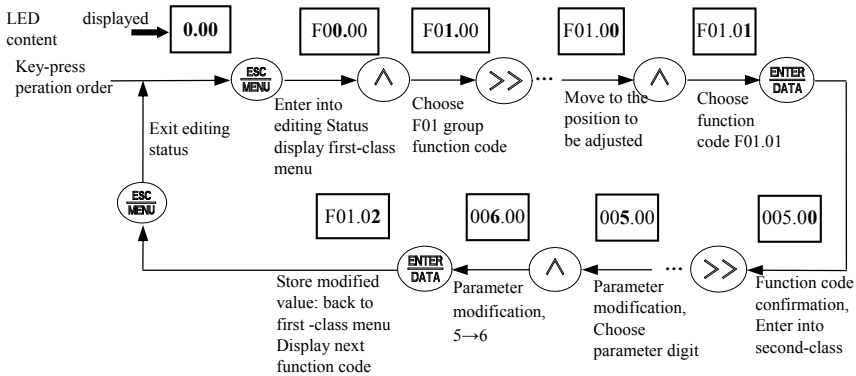

Fig.5-8 Example for parameter setting and modification

Description: under second -class menu: if the parameter has no blinking digit, this function code can't be modified, possible reasons are as follows:

1> This function code shouldn't be modified: for example actual detected status parameter: run record parameter etc.;

2> This function code can't be modified under run status and can be changed after stopping running;

(3) Specified frequency adjustment for common run

Take example modifying specified frequency from 50.00Hz to 40.00Hz at F01.06=0, F01.01=0 during running for explanation.

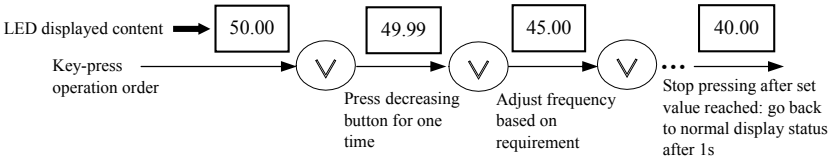

Fig.5-9 Set frequency adjustment operation example

(4) Jog run operation

For example: keypad as current run command channel: jog run frequency 5Hz: waiting status.

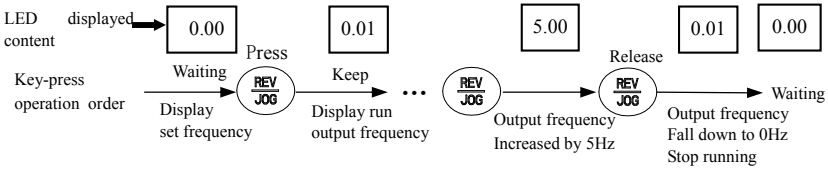

Fig.5-10 Jog run operating example

(5) Operation for entering to function code editing status after setting user password

For example:“User password” F27 is set to“12345”. Boldfaced digit in Fig.5-11 shows blinking bit.

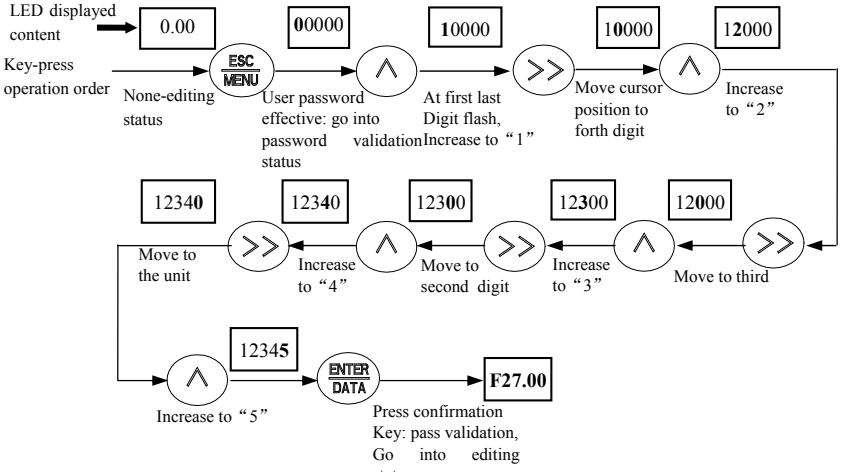

Fig.5-11 Inputting password to go into function code operation

5.3 Inverter electrification

5.3.1 Check before electrification

Please carry on wiring based on operation requirement provided in “inverter wiring” of this Service manual.

5.3.2 First electrification

Close input side AC power supply switch after correct wiring and power supply confirmed: electrify the inverter and keypad LED display “8.8.8.8.8”,

contactor closed normally: LED displayed set frequency shows that electrification is finished. First electrification operation process is shown as Fig.5-12:

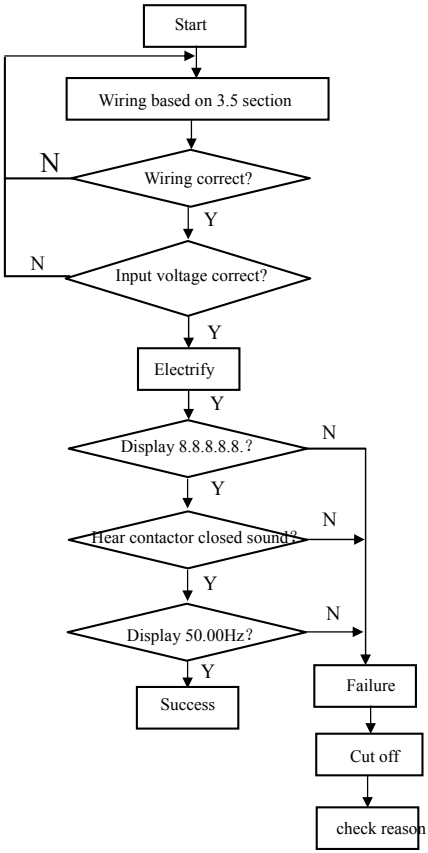

Fig.5-12 First electrification operation flow

6 EN650B Function parameter schedule graph

6.1 Symbol description

× ---- parameter can't be changed in process of running

○ ---- parameter can be changed in process of running

* ---- read-only parameter, unmodifiable

6.2 Function parameter schedule graph

F00-System Parameter Group					
Function code	**Name**	**Set range**	**Min. unit**	**Factor Default**	**Modification**
F00.00	Reserved				
F00.01	C-00 displays parameter selection when operation	0: Operating frequency (Hz) 1: Setup frequency (Hz) 2: Busbar voltage (V) 3: Output voltage (V) 4: Output current (A) 5: Output power (kW) 6: Output Torque (%) 7: X Terminal input status 8: Y Terminal output status 9: AI1 Voltage (V) 10: AI2 voltage (V)/current (mA) 11: Reserved 12: Count value 13: Length 14: Load speed display 15: PID provide 16: PID feedback 17: PLC segment 18: Input High-speed pulse frequency (0.01KHz) 19: Feedback speed (Hz) 20: Residual running time 21: AI1 Pre-correction voltage 22: AI2 Pre-correction voltage (V)/current (mA) 23: Reserved 24: Line speed 25: Current power on time 26: Current running time 27: Input High-speed pulse frequency (1Hz) 28: Communication set point 29: Encoder feedback speed (Hz) 30: Main frequency X display 31: Auxiliary frequency Y display 32～34: Reserved 35: target torque (%) 36: Spin change position 37: Power factor Angle 38: ABZ position	1	0	○

		39: VF Separation target voltage 40: VF Separation output voltage 41: X terminal input status intuitive display 42: Y terminal output status intuitive display 43: Reserved 44: Reserved 45: Fault information 46～57: Reserved 58: Z Signal counter 59: Set frequency (%) 60: Operating frequency (%) 61: Inverter status 62: module temperature 63: Feedback speed (r/min) 64: Encoder feedback speed (r/min) 65～78: Reserved			
F00.02	C-01 display parameter selection when operation	Same as above	1	1	○
F00.03	C-02 display parameter selection when operation	Same as above	1	4	○
F00.04	C-03 display parameter selection when operation	Same as above	1	3	○
F00.05	C-04 display parameter selection when operation	Same as above	1	2	○
F00.06	C-05 display parameter selection when operation	Same as above	1	62	○
F00.07	C-00 display parameter selection when stop	Same as above	1	1	○
F00.08	C-01 display parameter selection when stop	Same as above	1	2	○
F00.09	C-02 display parameter selection when stop	Same as above	1	7	○
F00.10	C-03 display parameter selection when stop	Same as above	1	8	○
F00.11	C-04 display parameter selection when stop	Same as above	1	9	○
F00.12	C-05 display parameter selection when stop	Same as above	1	10	○
F00.13	Reserved				
F00.14	Initialization of	0: No-operation	001	000	×

	parameter	01:Restore factory parameters, Excluding motor parameters 02: Clear record information 04: Back up user current parameters 501: Restore user backup parameters			
F00.15	M key function selection	0: M key invalid 1: Switch between command channel of the operation panel and remote command channel (Terminal command channel or communication command channel) 2: Reverse and reverse switch 3: Forward Jog running 4: Reverse Jog running	1	0	×
F00.16	REV/JOG key function selection	0: Reverse and reverse switch 1: Forward Jog running 2: Reverse Jog running	1	1	×
F00.17	Load speed display coefficient	0.0001～6.5000	0.0001	1.0000	○
F00.18	Reserved				
F00.19	STOP/RESET key function	0: STOP/RESET key stop function is valid only in keyboard operation mode 1: STOP/RESET key stop function is valid in any operation mode	1	1	○
F00.20 ～ F00.23	Reserved				
F00.24	The first motor control method	0: Without speed sensor vector control (SVC) 1: With Speed sensor vector control (FVC) 2: V/F control	1	0	×
F00.25 ～ F00.27	Reserved				

F01-Basic Run Function Parameter Group					
Function Code	**Name**	**Set Range**	**Min. Unit**	**Factory Default**	**Modifi -cation**
F01.00	Main frequency input channel selection	0: Digital setup (Power failure does not remember) 1: Digital setting (Power-down memory) 2: AI1 3: AI2 4: Reserved 5: Pulse setting (X8) 6: Multi-segment instruction 7: Simple PLC 8: PID 9: Communication given	1	0	×
F01.01	Preset frequency	0.00Hz～Maximum frequency (F01.08)	0.01Hz	50.00Hz	○
F01.02	Digital setting frequency shutdown memory selection	0: No memory 1: Memory	1	0	×
F01.03	Auxiliary frequency	Same as F01.00 (Main frequency command input	1	0	×

	command input selection	selection)			
F01.04	Reserved				
F01.05	Reserved				
F01.06	Frequency command overlay selection	Units digit: frequency source selection 0: Main frequency command 1: The result of the main and auxiliary operations (The operation relationship is determined by ten place) 2: Main frequency command and auxiliary frequency command switching 3: Main frequency command and main and auxiliary operation result switching 4: Auxiliary frequency command and main and auxiliary operation result switching Tens digit: frequency source primary and secondary operation relationship 0: Main + auxiliary 1: Main - auxiliary 2: The maximum of the two (Main frequency and Auxiliary frequency) 3: The minimum of the two (Main frequency and Auxiliary frequency)	01	00	×
F01.07	Reserved				
F01.08	Maximum frequency	5.00Hz～500.00Hz	0.01Hz	50.00Hz	×
F01.09	Auxiliary frequency command range selection during superposition	0: Relative to the maximum frequency 1: Relative to the frequency source command	1	0	×
F01.10	Auxiliary frequency command range when superimposing	0%～150%	1%	100%	×
F01.11	Upper limit frequency	Lower limit frequency F01.12 ~ maximum frequency F01.08	0.01Hz	50.00Hz	×
F01.12	Lower limit frequency	0.00Hz~ upper limit frequency F01.11	0.01Hz	0.00Hz	×
F01.13	Set the frequency lower than the lower limit frequency operation mode	0: Run at the lower limit frequency 1: Stop 2: Zero speed operation	1	0	○
F01.14	Reserved				
F01.15	Run command selection	0: Operation panel 1: Terminal 2: Communication	1	0	×
F01.16	Running direction	0: Run in the default direction 1: Run in the opposite direction to the default direction	1	0	×
F01.17	Acceleration time 1	0.00s～650.00s (F01.19=2) 0.0s～6500.0s (F01.19=1) 0s～65000s (F01.19=0)	-	Base on motor type	×
F01.18	Deceleration time 1	0.00s～650.00s (F01.19=2) 0.0s～6500.0s (F01.19=1) 0s～65000s (F01.19=0)	-	Base on motor type	×
F01.19	Acceleration/deceleration unit	0: 1 second 1: 0.1 second	-	1	×

		2: 0.01 second			
F01.20	Acceleration and deceleration method	0: linear acceleration and deceleration 1: Static S curve acceleration and deceleration	1	0	×
F01.21	S curve starting time ratio	0.0～(100.0%-F01.22)	0.1%	30.0%	×
F01.22	S curve end period time ratio	0.0～(100.0%-F01.21)	0.1%	30.0%	×
F01.23	Reserved				
F01.24	Reserved				
F01.25	Jog running frequency	0.00Hz～Maximum frequency F01.08	0.01Hz	2.00Hz	○
F01.26	Reserved				
F01.27	Reserved				
F01.28	Jog acceleration time	0.0s～6500.0s	0.1s	20.0s	○
F01.29	Jog deceleration time	0.0s～6500.0s	0.1s	20.0s	○

F02-Start, Stop, Forward/Reverse, Brake function parameter group					
Function Code	**Name**	**Set Range**	**Min. Unit**	**Factory Default**	**Modifi -cation**
F02.00	Start running mode	0: Direct start 1: Reserved 2: Speed tracking start (Valid in FVC mode)	1	0	×
F02.01	Reserved				
F02.02	Starting frequency	0.00Hz～10.00Hz	0.01Hz	0.00Hz	○
F02.03	Start frequency hold time	0.0s～100.0s	0.1s	0.0s	×
F02.04	Reserved				
F02.05	Reserved				
F02.06	Wake-up frequency	Sleep frequency (F02.08)～Maximum frequency (F01.08)	0.01Hz	0.00Hz	○
F02.07	Wake-up delay time	0.0s～6500.0s	0.1s	0.0s	○
F02.08	Sleep frequency	0.00Hz～Wake-up frequency (F02.06)	0.01Hz	0.00Hz	
F02.09	Sleep delay time	0.0s～6500.0s	0.1s	0.0s	○
F02.10	Reserved				
F02.11	Stop mode	0: Deceleration stop 1: Free stop	1	0	×
F02.12 ～ F02.19	Reserved				
F02.20	Forward/reverse dead zone time	0.0s～3000.0s	0.1s	0.0s	○
F02.21	Reverse frequency prohibition	0: Invalid 1: Valid	1	0	○
F02.22	Reserved				
F02.23	Brake unit action starting voltage	650.0V～800.0V	0.1V	720.0V	×
F02.24	Brake usage rate	0%～100%	1%	100%	○
F02.25	Reserved				
F02.26	Over debugging coefficient	100～120	1	110	×

F03-V/F Control Parameter Group					
Function Code	**Name**	**Set Range**	**Min. Unit**	**Factory Default**	**Modifi -cation**
F03.00	V/F curve set	0: Straight line V/F 1: Multi-point V/F 2: Square V/F 3~9: Reserved 10: VF complete separation mode 11: VF semi-separation mode	1	0	×
F03.01	Torque boost	0.0%～30.0% (0.0%: No torque boost)	0.1%	Base on motor type	○
F03.02	Torque boost cut-off frequency	0.00Hz～Maximum frequency	0.01Hz	50.00Hz	×
F03.03	Multi-point V/F frequency point 1	0.00Hz～F03.05	0.01Hz	0.00Hz	×
F03.04	Multi-point V/F voltage point 1	0.0%～100.0%	0.1%	0.0%	×
F03.05	Multi-point V/F frequency point 2	F03.03～F03.07	0.01Hz	0.00Hz	×
F03.06	Multi-point V/F voltage point 2	0.0%～100.0%	0.1%	0.0%	×
F03.07	Multi-point V/F frequency point 3	F03.05～motor rated frequency (F15.04)	0.01Hz	0.00Hz	×
F03.08	Multi-point V/F voltage point 3	0.0%～100.0%	0.1%	0.0%	×
F03.09	V/F over excitation gain	0～200	1	64	○
F03.10	V/F oscillation suppression gain	0～100	1	Base on motor type	○
F03.11	V/F separated voltage source	0: Digital setting (F03.12) 1: AI1 2: AI2 3: Reserved 4: Pulse setting (X8) 5: Multi-segment instructions 6: Simple PLC 7: Reserved 8: Communication given Note: 100.0% corresponds to the rated voltage of the motor	1	0	×
F03.12	V/F separation voltage digital setting	0V～Motor rated voltage	1V	0V	○
F03.13	V/F separation voltage acceleration and deceleration time	0.0s～1000.0s Note: Indicates the time when 0V changes to the rated voltage of the motor.	0.1s	0.0s	×
F03.14	Reserved				
F03.15	Reserved				
F03.16	Action current of over current stall	100%～200%	1%	150%	×
F03.17	Reserved				
F03.18	Suppression gain of over current stall	0～100	1	20	○
F03.19	Action voltage of overvoltage	120%～150%	1%	130%	×

	stall				
F03.20	Reserved				
F03.21	Reserved				
F03.22	Overvoltage stall suppression voltage gain	0～100	1	0	○
F03.23	Reserved				

F04-Auxiliary running parameter group					
Function Code	**Name**	**Set Range**	**Min. Unit**	**Factory Default**	**Modifi -cation**
F04.00	Jump freq 1	0.00Hz～Maximum frequency	0.01Hz	0.00Hz	○
F04.01	Reserved				
F04.02	Jump freq 2	0.00Hz～Maximum frequency	0.01Hz	0.00Hz	○
F04.03	Jump frequency amplitude	0.00Hz～Maximum frequency	0.01Hz	0.00Hz	○
F04.04	Whether the jump frequency is valid during acceleration and deceleration	0: Invalid 1: Valid	1	0	○
F04.05 ～ F04.07	Reserved				
F04.08	DPWM Switch upper limit frequency	0.00Hz～15.00Hz	0.01Hz	12.00Hz	○
F04.09	Carrier frequency	0.5kHz～16.0kHz	0.1kHz	Base on motor type	○
F04.10	Reserved				
F04.11	PWM modulation method	0: Asynchronous modulation 1: Synchronous modulation	1	0	○
F04.12	Dead zone compensation mode selection	0: No compensation 1: Compensation mode 1	1	1	○
F04.13	Random PWM depth	0: Random PWM is invalid 1~10: Carrier frequency random depth	1	0	○
F04.14	Acceleration time 1 and acceleration time 2 switch frequency points	0.00Hz～Maximum frequency	0.01Hz	0.00Hz	○
F04.15	Deceleration time 1 and deceleration time 2 switch frequency point	0.00Hz～Maximum frequency	0.01Hz	0.00Hz	○
F04.16	Acceleration time 2	0.0s～6500.0s	0.1s	Base on motor type	○
F04.17	Deceleration time 2	0.0s～6500.0s	0.1s	Base on motor type	○
F04.18	Acceleration time 3	0.0s～6500.0s	0.1s	Base on motor type	○
F04.19	Deceleration time 3	0.0s～6500.0s	0.1s	Base on motor type	○
F04.20	Acceleration time 4	0.0s～6500.0s	0.1s	0.0s	○
F04.21	Deceleration time 4	0.0s～6500.0s	0.1s	0.0s	○
F04.22 ～ F04.43	Reserved				

F05－Communication control parameter group					
Function Code	**Name**	**Set Range**	**Min. Unit**	**Factory Default**	**Modifi -cation**
F05.00	Protocol selection	0: Modbus protocol 1: Reserved 2: Reserved	1	0	×
F05.01	Communication baud rate	Units digit: Modbus 0: 300BPS 1: 600BPS 2: 1200BPS 3: 2400BPS 4: 4800BPS 5: 9600BPS 6: 19200BPS 7: 38400BPS 8: 57600BPS 9: 115200BPS Tens digit: Reserved Hundreds digit: Reserved Thousands digit: Reserved	0001	5005	○
F05.02	MODBUS Data format	0: No parity (8-N-2) 1: Even parity (8-E-1) 2: Odd parity (8-O-1) 3: No parity (8-N-1)	1	0	○
F05.03	Local address	0: Broadcast address 1～247	1	1	○
F05.04	Serial communication timeout	0.0: invalid 0.1～60.0s	0.1s	0.0s	○
F05.05	Reserved				
F05.06	Modbus Response delay	0～20ms	1ms	2ms	○
F05.07	Reserved				
F05.08	Modbus communication data format	Units digit: Modbus 0: Reserved 1: Standard Modbus protocol Ten digit: Reserved	01	31	○
F05.09 ～ F05.37	Reserved				
F05.38	Accumulated power-on time	0h～65535h	1h	-	*
F05.39	Accumulated running time	0h～65535h	1h	-	*

F06－Setting curve parameter group					
Function Code	**Name**	**Set Range**	**Min. Unit**	**Factory Default**	**Modifi -cation**
F06.00	AI curve selection	Units digit: AI1 curve selection 1: Curve 1 (2 points, see F06.01 ~ F06.04) 2: Curve 2 (2 points, see F06.06~F06.09)	001	321	○

		3: Curve 3 (2 points, see F06.11~F06.14) 4: Curve 4 (4 points, see F06.17~F06.24) 5: Curve 5 (4 points, see F06.25~F06.32) Tens digits: AI2 curve selection, same as above. Hundreds digit: Reserved			
F06.01	AI curve 1 minimum input	0.00V～F06.03	0.01V	0.00V	○
F06.02	AI curve 1 minimum input corresponding setting	-100.0%～100.0%	0.1%	0.0%	○
F06.03	AI curve 1 maximum input	F06.01～+10.00V	0.01V	10.00V	○
F06.04	AI curve 1 maximum input corresponding setting	-100.0%～100.0%	0.1%	100.0%	○
F06.05	AI1 filtering time	0.00s～10.00s	0.01s	0.10s	○
F06.06	AI curve 2 minimum input	0.00V～F06.08	0.01V	0.00V	○
F06.07	AI curve 2 minimum input corresponding setting	-100.0%～100.0%	0.1%	0.0%	○
F06.08	AI curve 2 maximum input	F06.06～+10.00V	0.01V	10.00V	○
F06.09	AI curve 2 maximum input corresponding setting	-100.0%～100.0%	0.1%	100%	○
F06.10	AI2 filter time	0.00s～10.00s	0.01s	0.10s	○
F06.11	AI curve 3 minimum input	-10.00V ～ F06.13	0.01V	-10.00V	○
F06.12	AI curve 3 minimum input corresponding setting	-100.0%～100.0%	0.1%	-100.0%	○
F06.13	AI curve 3 maximum input	F06.11～+10.00V	0.01V	10.00V	○
F06.14	AI curve 3 maximum input corresponding setting	-100.0%～100.0%	0.1%	100%	○
F06.15	AI3 filter time	0.00s～10.00s	0.01s	0.10s	○
F06.16	AI below the minimum setting selection	Units digit: AI1 is lower than the minimum input setting selection 0: Corresponding to the minimum input setting 1:0.0% Tens digits: AI2 is lower than the minimum input setting selection, ibid. Hundreds digit: Reserved	001	0.00	○
F06.17	AI curve 4 minimum input	-10.00V～F06.19	0.01V	0.00V	○
F06.18	AI curve 4 minimum input corresponding setting	-100.0%～+100.0%	0.1%	0.00%	○
F06.19	AI curve 4 inflection point 1 input	F06.17～F06.21	0.01V	3.00V	○
F06.20	AI curve 4 inflection point 1 input corresponding setting	-100.0%～+100.0%	0.1%	30.00%	○
F06.21	AI curve 4 inflection point 2 input	F06.19～F06.23	0.01V	6.00V	○
F06.22	AI curve 4 inflection point 2 input corresponding setting	-100.0%～+100.0%	0.1%	60.00%	○
F06.23	AI curve 4 maximum input	F06.21～+10.00V	0.01V	10.00V	○
F06.24	AI curve 4 maximum input corresponding setting	-100.0%～+100.0%	0.1%	100.00%	○
F06.25	AI curve 5 minimum input	-10.00V～F06.27	0.01V	-10.00V	○

F06.26	AI curve 5 minimum input corresponding setting	-100.0%～+100.0%	0.1%	-100.00%	○
F06.27	AI curve 5 inflection point 1 input	F06.25～F06.29	0.01V	-3.00V	○
F06.28	AI curve 5 inflection point 1 input corresponding setting	-100.0%～+100.0%	0.1%	-30.00%	○
F06.29	AI curve 5 inflection point 2 input	F06.27～F06.31	0.01V	3.00V	○
F06.30	AI curve 5 inflection point 2 input corresponding setting	-100.0%～+100.0%	0.1%	30.00%	○
F06.31	AI curve 5 maximum input	F06.29～+10.00V	0.01V	10.00V	○
F06.32	AI curve 5 maximum input corresponding setting	-100.0%～+100.0%	0.1%	100.00%	○

F07-Analog, Pulse input function parameter group					
Function Code	**Name**	**Set Range**	**Min. Unit**	**Factory Default**	**Modifi -cation**
F07.00	Function selection when AI1 terminal is used as X terminal	0～59	1	0	×
F07.01	Function selection when AI2 terminal is used as X terminal	0～59	1	0	×
F07.02	Reserved				
F07.03	Effective mode selection when AI terminal is used as X terminal	0: High level valid 1: Low level valid Units digit: AI1 Tens digit: AI2 Hundreds digit: Reserved	1	0	×
F07.04 ～ F07.06	Reserved				
F07.07	Pulse input minimum frequency	0.00kHz～F07.09	0.01kHz	0.00kHz	○
F07.08	Pulse minimum input frequency corresponding setting	-100.0%～100.0%	0.1%	0.0%	○
F07.09	Pulse input maximum frequency	F07.07～100.00kHz	0.01kHz	50.00kHz	○
F07.10	Pulse maximum input frequency corresponding setting	-100.0%～100.0%	0.1%	100.0%	○
F07.11	Pulse filtering time	0.00s～10.00s	0.01s	0.10s	○
F07.12 ～ F07.17	Reserved				

F08 - On-off input function parameter group					
Function Code	**Name**	**Set Range**	**Min. Unit**	**Factory Default**	**Modifi -cation**
F08.00	X terminal valid mode selection 1	0: Low level valid 1: High level valid Units digit: X1 terminal Tens digit: X2 terminal	00001	00000	×

		Hundreds digit: X3 terminal Thousands digit: X4 terminal Ten thousands digit: X5 terminal			
F08.01	X terminal filter time	0.000s～1.000s	0.001s	0.010s	○
F08.02	X1 delay time	0.0s～3600.0s	0.1s	0.0s	×
F08.03	X2 delay time	0.0s～3600.0s	0.1s	0.0s	×
F08.04	X3 delay time	0.0s～3600.0s	0.1s	0.0s	×
F08.05	X terminal valid mode selection 2	0: Low level valid 1: High level valid Units digit: X6 terminal Tens digit: X7 terminal Hundreds digit: X8 terminal Thousands digit: Reserved Ten thousands digit: Reserved	00001	00000	×
F08.06	Reserved				
F08.17	Reserved				
F08.18	X1 terminal function selection	0: No function 1: Forward or run command 2: Reverse running or forward running direction (Note: When set to 1, 2, it needs to be used with F08.26.For more details, see function code parameter description for details) 3: Three-wire operation control 4: Forward jog (FJOG) 5: Reverse Jog (RJOG) 6: Terminal UP 7: Terminal DOWN 8: Free stop 9: Fault reset (RESET) 10: Run pause 11: External fault normally open input 12: Multi-stage command terminal 1 13: Multi-stage command terminal 2 14: Multi-stage command terminal 3 15: Multi-stage command terminal 4 16: Acceleration and deceleration time selection terminal 1 17: Acceleration/deceleration time selection terminal 2 18: Frequency source switching 19: UP/DOWN setting is cleared (Terminal, keyboard) 20: Control command switching terminal 1 21: Acceleration and deceleration prohibited 22: PID suspension 23: PLC status reset 24: Swing frequency pause 25: Counter input 26: Counter reset 27: Length count input	1	1	×

		28: Length reset 29: Torque control is prohibited 30: PULSE frequency input (Only valid for X8) 31: Reserved 32: Immediate DC braking 33: External fault normally closed input 34: Frequency modification enabled 35: PID direction is reversed 36: External parking terminal 1 37: Control command switching terminal 2 38: PID score suspension 39: Main frequency and preset frequency switching 40: Auxiliary frequency and preset frequency switching 41: Reserved 42: Reserved 43: PID parameter switching 44: User-defined fault 1 45: User-defined fault 2 46: Speed control / torque control switching 47: Emergency stop 48: External parking terminal 2 49: Deceleration DC braking 50: This running time is cleared. 51～59: Reserved			
F08.19	X2 Terminal function selection	Same as above	1	4	×
F08.20	X3 Terminal function selection	Same as above	1	9	×
F08.21	X4 Terminal function selection	Same as above	1	12	×
F08.22	X5 Terminal function selection	Same as above	1	13	×
F08.23	X6 Terminal function selection	Same as above	1	0	×
F08.24	X7 Terminal function selection	Same as above	1	0	×
F08.25	X8 Terminal function selection	Same as above	1	0	×
F08.26	Terminal command mode	0: Two-wire type 1 1: Two-wire type 2 2: Three-line type 1 3: Three-line 2	1	0	×
F08.27 ～ F08.31	Reserved				

F09-On-off ,analog output function parameter group					
Function Code	**Name**	**Set Range**	**Min. Unit**	**Factory Default**	**Modifi -cation**
F09.00	Y1 output function selection	0: No output 1: The inverter is running 2: Fault output (failure for free stop) 3: Frequency level detection FDT1 output 4: Frequency arrival 5: Zero speed running (not output when stopping) 6: Motor overload pre-alarm 7: Inverter overload pre-alarm 8: Set the value to arrive 9: Specify the value to arrive 10: Length reached 11: PLC cycle completed 12: Accumulated running time arrives 13: Frequency limit 14: Torque limit 15: Ready to run 16:AI1>AI2 17: The upper limit frequency arrives 18:Lower limit frequency arrival (operation related) 19: Under voltage status output 20: Communication setting 21: Reserved 22: Reserved 23:Zero speed operation (output also when stopping) 24: Accumulated power-on time arrives 25: Frequency level detection FDT2 output 26: Frequency 1 reaches the output 27: Frequency 2 reaches the output 28: Current 1 reaches the output 29: Current 2 reaches the output 30: Timing arrives at the output 31: AI1 input overrun 32: Reserved 33: Reverse running 34: Zero current state 35: Module temperature reached 36: Output current overrun 37: Lower limit frequency arrives (stop output also) 38: Alarm output (all faults) 39: Motor over temperature pre-alarm 40: This running time arrives 41: Reserved	1	1	○
F09.01	Y2 output function selection	Same as above	1	4	○
F09.02	Y3 output function selection	Same as above	1	0	○

F09.03	Y4 output function selection (Reuse the DO terminal)	Same as above	1	0	○
F09.04	Control board relay function selection (T/A-T/B-T/C)	Same as above	1	2	○
F09.05	Frequency arrival detection range	0.0%～100.0% (Maximum frequency)	0.1%	0.0%	○
F09.06	Frequency detection value 1	0.00Hz～Maximum frequency	0.01Hz	50.00Hz	○
F09.07	Frequency detection lag rate 1	0.0%～100.0% (FDT1 Electrical level)	0.1%	5.0%	○
F09.08	Frequency detection value 2	0.00Hz～Maximum frequency	0.01Hz	50.00Hz	○
F09.09	Frequency detection lag rate 2	0.0%～100.0% (FDT2 Level)	0.1%	5.0%	○
F09.10	AI1 input voltage protection value lower limit	0.00V～F09.11	0.01V	3.10V	○
F09.11	AI1 input voltage protection value upper limit	F09.10～10.00V	0.01V	6.80V	○
F09.12	Zero current detection level	0.0%～300.0% (100.0% Corresponding motor rated current)	0.1%	5.0%	○
F09.13	Zero current detection delay time	0.01s～600.00s	0.01s	0.10s	○
F09.14	Exceeding current limit	0.0% (Not detecting) 0.1%～300.0% (Motor rated current)	0.1%	200.0%	○
F09.15	Exceeding current overrun detection delay time	0.01s～600.00s	0.01s	0.00s	○
F09.16	Arbitrary arrival current 1	0.0%～300.0% (100.0% Corresponding motor rated current)	0.1%	100.0%	○
F09.17	Arbitrary current 1 amplitude	0.0%～300.0% (100.0% Corresponding motor rated current)	0.1%	0.0%	○
F09.18	Arbitrary arrival current 2	0.0%～300.0% (100.0% Corresponding motor rated current)	0.1%	100.0%	○
F09.19	Arbitrary arrival current 2 amplitude	0.0%～300.0% (100.0% Corresponding motor rated current)	0.1%	0.0%	○
F09.20	Arbitrary arrival frequency detection value 1	0.00Hz～Maximum frequency	0.01Hz	50.00Hz	○
F09.21	Arbitrary arrival frequency detection amplitude 1	0.0%～100.0% (Maximum frequency)	0.1%	0.0%	○
F09.22	Arbitrary arrival frequency detection value 2	0.00Hz～Maximum frequency	0.01Hz	50.00Hz	○
F09.23	Arbitrary arrival frequency detection	0.0%～100.0% (Maximum frequency)	0.1%	0.0%	○

	range 2				
F09.24	Multi-function output terminal effective state selection	0: Positive logic 1: Inverse logic Units digit: Y1 Tens digit: Y2 Hundreds digit: Y3 Thousands digit: Y4 Ten thousands digit: RELAY1	00001	00000	○
F09.25	Y1 Output delay time	0.0s～3600.0s	0.1s	0.0s	○
F09.26	Y2 Output delay time	0.0s～3600.0s	0.1s	0.0s	○
F09.27	Y3 Output delay time	0.0s～3600.0s	0.1s	0.0s	○
F09.28	Y4 Output delay time	0.0s～3600.0s	0.1s	0.0s	○
F09.29	RELAY1 Output delay time	0.0s～3600.0s	0.1s	0.0s	○
F09.30 ～ F09.34	Reserved				
F09.35	AO1 Output function selection	0: Running frequency 1: Set frequency 2: Output current 3: Output torque (Torque absolute value) 4: Output power 5: Output voltage (100% corresponds to 1.2 times rated voltage) 6: PULSE input (100% corresponds to 100kHz) 7: AI1 8: AI2 9: Reserved 10: Length 11: Record the value 12: Communication settings 13: Motor speed 14: Output current (100% corresponds to 1000A) 15: Bus voltage (100% corresponds to 1000V) 16: Output torque (0 to 100% corresponds to -200% to 200% of rated torque)	1	0	○
F09.36	AO2 Output function selection	Same as above	1	0	○
F09.37	DO Output function selection (Reuse Y4 terminal)	Same as above	1	0	○
F09.38	Y4/DO terminal output mode selection	0: Pulse output (DO) 1: Switch output (Y4)	1	0	○
F09.39	Reserved				
F09.40	AO1 zero offset coefficient	-100.0%～+100.0%	0.1%	0.0%	○

F09.41	AO1 Gain	-10.00～+10.00	0.01	1.00	○
F09.42	Reserved				
F09.43	AO2 Zero offset coefficient	-100.0%～+100.0%	0.1%	0.0%	○
F09.44	AO2 Gain	-10.00～+10.00	0.01	1.00	○
F09.45	Reserved				
F09.46	Reserved				
F09.47	DO Output maximum frequency	0.01kHz～100.00kHz	0.01kHz	50.00 kHz	○
F09.48 ～ F09.50	Reserved				

F10-Simple PLC/Multi-speed Function Parameter Group					
Function Code	**Name**	**Set Range**	**Min. Unit**	**Factory Default**	**Modifi -cation**
F10.00	Simple PLC operation setting	0: Single run end shutdown 1: The end of a single run to maintain the final value 2: Always cycle	1	0	○
F10.01	Simple PLC power-down memory selection	Units digit: Power-down memory selection 0: Power failure does not remember 1: Power-down memory Tens digits: stop memory selection 0: Stop without memory 1: Shutdown memory	01	00	○
F10.02	Simple PLC section 0 running time	0.0s (h)～ 6500.0s (h)	0.1s(h)	0.0s(h)	○
F10.03	Simple PLC 0th acceleration/ deceleration time selection	0～3	1	0	○
F10.04	Simple PLC first stage running time	0.0s (h)～ 6500.0s (h)	0.1s(h)	0.0s(h)	○
F10.05	Simple PLC first stage acceleration and deceleration time selection	0～3	1	0	○
F10.06	Simple PLC second stage running time	0.0s (h)～ 6500.0s (h)	0.1s(h)	0.0s(h)	○
F10.07	Simple PLC second stage acceleration and deceleration time selection	0～3	1	0	○
F10.08	Simple PLC third stage running time	0.0s (h)～ 6500.0s (h)	0.1s(h)	0.0s(h)	○
F10.09	Simple PLC 3rd section acceleration and deceleration time selection	0～3	1	0	○
F10.10	Simple PLC 4th running time	0.0s (h)～ 6500.0s (h)	0.1s(h)	0.0s(h)	○
F10.11	Simple PLC 4th section acceleration and deceleration time selection	0～3	1	0	○
F10.12	Simple PLC 5th run time	0.0s (h)～ 6500.0s (h)	0.1s(h)	0.0s(h)	○
F10.13	Simple PLC 5th section acceleration and deceleration time selection	0～3	1	0	○

F10.14	Simple PLC section 6 running time	0.0s (h)～ 6500.0s (h)	0.1s(h)	0.0s(h)	○
F10.15	Simple PLC 6th section acceleration and deceleration time selection	0～3	1	0	○
F10.16	Simple PLC 7th run time	0.0s (h)～ 6500.0s (h)	0.1s(h)	0.0s(h)	○
F10.17	Simple PLC 7th section acceleration and deceleration time selection	0～3	1	0	○
F10.18	Simple PLC 8th run time	0.0s (h)～ 6500.0s (h)	0.1s(h)	0.0s(h)	○
F10.19	Simple PLC 8th section acceleration and deceleration time selection	0～3	1	0	○
F10.20	Simple PLC 9th run time	0.0s (h)～ 6500.0s (h)	0.1s(h)	0.0s(h)	○
F10.21	Simple PLC 9th acceleration and deceleration time selection	0～3	1	0	○
F10.22	Simple PLC run time of the 10th segment	0.0s (h)～ 6500.0s (h)	0.1s(h)	0.0s(h)	○
F10.23	Simple PLC section 10 acceleration and deceleration time selection	0～3	1	0	○
F10.24	Simple PLC section 11 running time	0.0s (h)～ 6500.0s (h)	0.1s(h)	0.0s(h)	○
F10.25	Simple PLC 11th acceleration and deceleration time selection	0～3	1	0	○
F10.26	Simple PLC 12th run time	0.0s (h)～ 6500.0s (h)	0.1s(h)	0.0s(h)	○
F10.27	Simple PLC 12th acceleration and deceleration time selection	0～3	1	0	○
F10.28	Simple PLC 13th run time	0.0s (h)～ 6500.0s (h)	0.1s(h)	0.0s(h)	○
F10.29	Simple PLC section 13 acceleration and deceleration time selection	0～3	1	0	○
F10.30	Simple PLC 14th run time	0.0s (h)～ 6500.0s (h)	0.1s(h)	0.0s(h)	○
F10.31	Simple PLC 14th section acceleration and deceleration time selection	0～3	1	0	○
F10.32	Simple PLC section 15 running time	0.0s (h)～ 6500.0s (h)	0.1s(h)	0.0s(h)	○
F10.33	Simple PLC section 15 acceleration and deceleration time selection	0～3	1	0	○
F10.34	Simple PLC runtime unit	0: s (second) 1: h (hour)	1	0	○
F10.35	Multi-segment instruction 0 given mode	0: Function code F10.36 given 1: AI1 2: AI2 3: Reserved 4: PULSE 5: PID 6: Preset frequency (F01.01) is given, UP/DOWN can be modified	1	0	○
F10.36	Multi-segment instruction 0	-100.0%～100.0%	0.1%	0.0%	○
F10.37	Multi-segment instruction 1	-100.0%～100.0%	0.1%	0.0%	○
F10.38	Multi-segment instruction 2	-100.0%～100.0%	0.1%	0.0%	○
F10.39	Multi-segment instruction 3	-100.0%～100.0%	0.1%	0.0%	○
F10.40	Multi-segment instruction 4	-100.0%～100.0%	0.1%	0.0%	○
F10.41	Multi-segment instruction 5	-100.0%～100.0%	0.1%	0.0%	○
F10.42	Multi-segment instruction 6	-100.0%～100.0%	0.1%	0.0%	○

F10.43	Multi-segment instruction 7	-100.0%～100.0%	0.1%	0.0%	○
F10.44	Multi-segment instruction 8	-100.0%～100.0%	0.1%	0.0%	○
F10.45	Multi-segment instruction 9	-100.0%～100.0%	0.1%	0.0%	○
F10.46	Multi-segment instruction 10	-100.0%～100.0%	0.1%	0.0%	○
F10.47	Multi-segment instruction 11	-100.0%～100.0%	0.1%	0.0%	○
F10.48	Multi-segment instruction 12	-100.0%～100.0%	0.1%	0.0%	○
F10.49	Multi-segment instruction 13	-100.0%～100.0%	0.1%	0.0%	○
F10.50	Multi-segment instruction 14	-100.0%～100.0%	0.1%	0.0%	○
F10.51	Multi-segment instruction 15	-100.0%～100.0%	0.1%	0.0%	○

F11-Close loop PID run function parameter group					
Function Code	**Name**	**Set Range**	**Min. Unit**	**Factory Default**	**Modifi -cation**
F11.00	Reserved				
F11.01	PID given source	0: F11.02setting 1: AI1 2: AI2 3: Reserved 4: Pulse setting (X8) 5: Communication given 6: Multiple instructions are given	1	0	○
F11.02	PID value given	0.0%～100.0%	0.1%	50.0%	○
F11.03	PID feedback source	0: AI1 1: AI2 2: Reserved 3: AI1-AI2 4: PULSE setting (X8) 5: Communication given 6: AI1+AI2 7: MAX (|AI1|, |AI2|) 8: MIN (|AI1|, |AI2|)	1	0	○
F11.04	PID action direction	0: Positive action 1: Reaction	1	0	○
F11.05	PID given feedback range	0～65535	1	1000	○
F11.06	Proportional gain KP1	0.0～1000.0	0.1	20.0	○
F11.07	Integration time TI1	0.01s～10.00s	0.01s	2.00s	○
F11.08	Differential time TD1	0.000s～10.000s	0.001s	0.000s	○
F11.09	PID reverse cutoff frequency	0.00～Maximum frequency	0.01Hz	2.00Hz	×
F11.10	PID deviation limit	0.0%～100.0%	0.1%	0.0%	○
F11.11	PID differential limiting	0.00%～100.00%	0.01%	0.10%	○
F11.12	PID given change time	0.00～650.00s	0.01s	0.00s	○
F11.13	PID feedback filter time	0.00～60.00s	0.01s	0.00s	○
F11.14	PID output filtering time	0.00～60.00s	0.01s	0.00s	○
F11.15	Proportional gain KP2	0.0～100.0	0.1	20.0	○
F11.16	Integration time TI2	0.01s～10.00s	0.01s	2.00s	○
F11.17	Derivative time TD2	0.000s～10.000s	0.001s	0.000s	○
F11.18	PID parameter switching	0: Do not switch	1	0	○

	condition	1: Switch by X terminal 2: Automatic switching according to deviation			
F11.19	PID parameter switching deviation 1	0.0%～F11.20	0.1%	20.0%	○
F11.20	PID parameter switching deviation 2	F11.19～100.0%	0.1%	80.0%	○
F11.21	PID initial value	0.0%～100.0%	0.1%	0.0%	○
F11.22	PID initial value hold time	0.00～650.00s	0.01s	0.00s	○
F11.23	PID integral attribute	Units digit: Integral separation 0: Invalid 1: Valid Tens digits: Whether to stop the integration after outputting to the limit 0: Continue to score 1: Stop the score	01	00	○
F11.24	PID feedback loss detection value	0.0%: Do not judge feedback loss 0.1%～100.0%	0.1%	0.0%	○
F11.25	PID feedback loss detection time	0.0s～20.0s	0.1s	0.0s	○
F11.26	PID shutdown operation	0: Stop without operate 1: Stop with operate	1	0	○
F11.27 ～ F11.29	Reserved				

F12-Reserved parameter group 1					
Function Code	**Name**	**Set Range**	**Min. Unit**	**Factory Default**	**Modifi -cation**
F12.00 ～ F12.14	Reserved				

F13－Traverse/ Fixed Length Control Function Parameter Group					
Function Code	**Name**	**Set Range**	**Min. Unit**	**Factory Default**	**Modifi -cation**
F13.00	Traverse setting method	0: Relative to the center frequency 1: Relative to the maximum frequency	1	0	○
F13.01	Traverse frequency range	0.0% ~ 100.0%	0.1%	0.0%	○
F13.02	Sudden-Jump frequency	0.0% ~ 50.0%	0.1%	0.0%	○
F13.03	Traverse cycle	0.0s ~ 3000.0s	0.1s	10.0s	○
F13.04	Triangular wave rising time	0.1% ~ 100.0%	0.1%	50.0%	○
F13.05	Setting length	0m ~ 65535m	1m	1000m	○
F13.06	Actual length	0m ~ 65535m	1m	0m	○
F13.07	Pulse number per meter	0.1 ~ 6553.5	0.1	100.0	○
F13.08	Set count value	1 ~ 65535	1	1000	○
F13.09	Specified count value	1 ~ 65535	1	1000	○
F13.10	Reserved				

～ F13.14					

F14-Vector Control Parameter Group					
Function code	**Name**	**Set Range**	**Min. Unit**	**Factory Default**	**Modifi -cation**
F14.00	Speed/torque control mode selection	0: Speed control 1: Torque control	1	0	×
F14.01	Speed loop high speed proportional gain	1～100	1	20	○
F14.02	Speed loop high speed integration time	0.01s～10.00s	0.01s	1.00s	○
F14.03	Speed loop low speed proportional gain	1～100	1	20	○
F14.04	Speed loop low speed integration time	0.01s～10.00s	0.01s	0.50s	○
F14.05	Switching frequency 1	0.00～F14.06	0.01Hz	5.00Hz	×
F14.06	Switching frequency 2	F14.05～Maximum frequency	0.01Hz	10.00Hz	×
F14.07	Excitation adjustment proportional gain	0～60000	1	2000	○
F14.08	Excitation adjustment integral gain	0～60000	1	1300	○
F14.09	Torque adjustment proportional gain	0～60000	1	2000	○
F14.10	Torque adjustment integral gain	0～60000	1	1300	○
F14.11	Torque upper limit source (Electric) in speed control mode	0: Function code F14.12 setting 1: AI1 2: AI2 3: Reserved 4: PULSE setting 5: Communication given 6: MIN (AI1,AI2) 7: MAX (AI1,AI2) (The full scale of the 1~7 option corresponds to F14.12)	1	0	○
F14.12	Torque upper limit digital setting in speed control mode (Electric)	0.0%～200.0%	0.1%	150.0%	○
F14.13	Torque upper limit source (generation) in speed control mode	0: Function code F14.14 setting 1: AI1 2: AI2 3: Reserved 4: PULSE setting 5: Communication given 6: MIN (AI1,AI2) 7: MAX (AI1,AI2) (The full scale of the 1~7 option corresponds to F14.14)	1	0	○

F14.14	Torque upper limit digital setting in speed control mode (Generation)	0.0%～200.0%	0.1%	150.0%	○
F14.15	Torque setting source selection in torque control mode	0: Digital setting 1 (F14.16) 1: AI1 2: AI2 3: Reserved 4: PULSE 5: Communication given 6: MIN (AI1,AI2) 7: MAX (AI1,AI2) (The full scale of the 1~7 option corresponds to the F14.16 digital setting)	1	0	×
F14.16	Torque digital setting in torque control mode	-200.0%～200.0%	0.1%	150.00%	○
F14.17	Torque control positive maximum frequency	0.00Hz～Maximum frequency	0.01Hz	50.00 Hz	○
F14.18	Torque control reverse maximum frequency	0.00Hz～Maximum frequency	0.01Hz	50.00 Hz	○
F14.19	Torque rise filter time	0.00s～650.00s	0.01s	0.00s	○
F14.20	Torque reduction filter time	0.00s～650.00s	0.01s	0.00s	○
F14.21	Synchronous machine weak magnetic mode	0: No weakening 1: Automatic adjustment 2: Calculation and automatic adjustment are valid at the same time	1	1	×
F14.22	Synchronous machine weak magnetic gain	0～50	1	5	○
F14.23	Reserved				
F14.24	Synchronous machine output voltage upper limit margin	0%～50%	1%	5%	×
F14.25	Synchronous machine initial position angle detection current	50%～180%	1%	100%	×
F14.26	Synchronous machine initial position angle detection	0: Test every time 1: Not detected 2: Power on the first operation monitoring	1	1	×
F14.27	Synchronous machine salient rate adjustment gain	50～500	1	100	○
F14.28	Maximum torque current ratio control	0: Off 1: Open	1	0	×
F14.29	Z signal correction	0: Off 1: Open	1	1	×
F14.30	Low speed excitation current	0%～80%	1%	30%	×
F14.31	Low speed carrier frequency	0.8K～F04.09	0.1K	1.5K	×
F14.32	Synchronous machine inductance detection current	0%～80%	1%	80%	×
F14.33	Zero servo speed loop enable	0: Off 1: Open	1	0	×

F14.34	Switching frequency	0.00～F14.05	0.01Hz	0.30Hz	×
F14.35	Zero servo speed loop proportional gain	1～100	1	10	○
F14.36	Zero servo speed loop integration time	0.01s～10.00s	0.01s	0.50s	○

F15-Asynchronous Motor Parameter Group					
Function code	**Name**	**Set Range**	**Min. Unit**	**Factory Default**	**Modifi -cation**
F15.00	Motor type selection	2: Permanent magnet synchronous motor	1	2	*
F15.01	Motor rated power	0.1KW～1000.0KW	0.1KW	Base on motor type	×
F15.02	Motor rated voltage	1V～2000V	1V	Base on motor type	×
F15.03	Motor rated current	0.01A～655.35A (Inverter power≤55kW) 0.1A～6553.5A (Inverter power＞55kW)	-	Base on motor type	×
F15.04	Motor rated frequency	0.01Hz～Maximum frequency	0.01Hz	Base on motor type	×
F15.05	Motor rated speed	1rpm～65535rpm	1rpm	Base on motor type	×
F15.06 ～ F15.11	Reserved				
F15.12	Synchronous motor stator resistance	0.001Ω～65.535Ω (Inverter power≤55kW) 0.0001Ω～6.5535Ω (Inverter power＞55kW)	-	Tuning parameter	×
F15.13	Synchronous motor D-axis inductance	0.01mH～655.35mH (Inverter power≤ 55kW) 0.001mH ～ 65.535mH (Inverter power ＞ 55kW)	-	Tuning parameter	×
F15.14	Synchronous motor Q-axis inductance	0.01mH～655.35mH (Inverter power≤ 55kW) 0.001mH ～ 65.535mH (Inverter power ＞ 55kW)	-	Tuning parameter	×
F15.15	Synchronous motor back electromotive force	0.0V～6553.5V	0.1V	Tuning parameter	×
F15.16 ～ F15.18	Reserved				
F15.19	Tuning selection	0: No operation 1~10: Reserved 11: Synchronous motor with load tuning 12: Synchronous motor no-load tuning	1	0	×
F15.20 ～ F15.22	Reserved				

F16-Closed loop encoder parameter group					
Function code	**Name**	**Set Range**	**Min. Unit**	**Factory Default**	**Modifi -cation**
F16.00	Zero servo enable	0: Close 1: Start	1	0	×
F16.01	Encoder line number	1～65535	1	1024	×
F16.02	ABZ incremental encoder AB phase sequence	0: Forward 1: Reverse	1	0	×
F16.03	Encoder type	0: ABZ incremental encoder 1: UVW incremental encoder 2: Resolver 3: Reserve 4: Wire less UVW encoder	1	0	×
F16.04	Encoder established angle	0.0～359.9°	0.0°	0.0°	×
F16.05	UVW encoder UVW phase sequence	0: Forward 1: Reverse	1	0	×
F16.06	Resolver pole pairs No.	1～65535	1	1	×
F16.07 ～ F16.13	Reserve				

F17-Reserved Parameter Group2					
Function code	**Name**	**Set Range**	**Min. Unit**	**Factory Default**	**Modifi -cation**
F17.00	Reserve				

F18-Enhance Control Parameter Group					
Function code	**Name**	**Set Range**	**Min. Unit**	**Factory Default**	**Modifi -cation**
F18.00	Run command binding main frequency command selection	Units digit: Operation panel binding frequency source selection 0: No binding 1: Digits setting frequency 2: AI1 3: AI2 4: Reserve 5: PULSE setting（X8） 6: Multiple-speed 7: Simple PLC 8: PID 9: Communication preset Tens digit: Terminal binding frequency source selection Hundreds digit: Communication binding frequency source selection	001	000	×
F18.01 ～ F18.05	Reserve				

F18.06	Terminal UP/DOWN gradient	0.001Hz/s～65.535Hz/s	0.001 Hz/s	1.00 Hz/s	○
F18.07	Reserve				
F18.08	Droop rate	0.00%～10.00%	0.01%	0.00%	○
F18.09	Setup accumulate power on time	0h～65000h	1h	0h	○
F18.10	Setup accumulate run time	0h～65000h	1h	0h	○
F18.11	Timing function selection	0: Invalid 1: Valid	1	0	×
F18.12	Timing operation time	0.0Min～6500.0Min	0.1Min	0.0Min	×
F18.13	Arrival time	0.0Min～6500.0Min	0.1Min	0.0Min	×
F18.14 ～ F18.16	Reserve				
F18.17	Cooling fan control	0: Fan works while run inverter 1: Keep running 2: Fan smart run on temperature	1	0	○
F18.18 ～ F18.21	Reserve				
F18.22	Inverter module heat sink temperature	-20℃～120℃	1℃	-	*
F18.23	Reserve				
F18.24	Reserve				

F19-Protective Relevant Function Parameter Group					
Function code	**Name**	**Set Range**	**Min. Unit**	**Factory Default**	**Modifi -cation**
F19.00	Reserve				
F19.01	Times of fault self-recovery	0～20	1	0	○
F19.02	Time for fault self-recovery	0.1s～100.0s	0.1s	1.0s	○
F19.03	Motor overload protection selection	0: Forbid 1: Permit	1	1	○
F19.04	Motor over load protection gain	0.20～10.00	0.01	1.00	○
F19.05	Motor overload alarm coefficient	50%～100%	1%	80%	○
F19.06	Reserve				
F19.07	Reserve				
F19.08	Contactor actuation protection selection	Units digit: Reserve Tens digit: Contactor actuation protection selection 0: Forbid 1: Permit	01	10	○
F19.09	Output phase loss protection selection	0: Forbid 1: Permit	1	1	○

F19.10	Short circuit to ground protection selection	Units digit: Short circuit to ground protection selection while power on Tens digit: Short circuit to ground protection selection before power on 0: Invalid 1: Valid	01	01	○
F19.11	Reserve				
F19.12	Module temperature arrival	0℃～ 100℃	1℃	90℃	○
F19.13	Reserve				
F19.14	Reserve				
F19.15	Reserve				
F19.16	Rapid current-limiting enable	0: Can't enable 1: Enable	1	1	○
F19.17	Motor run section selection when instant power off	0: Invalid 1: Bus voltage constant control 2: Deceleration and stop	1	0	×
F19.18	Recover voltage when instant power off	80%～100%	1%	90%	×
F19.19	The time for voltage recovery when instant power off	0.0s～100.0s	0.1s	0.5s	×
F19.20	The instant power off voltage	60.0%～100.0%	1.0%	80.0%	×
F19.21	Reserve				
F19.22	Reserve				
F19.23	Reserve				
F19.24	Run protection selection	0: No protection 1: Protect	1	0	×
F19.25 ～ F19.30	Reserve				
F19.31	Fault protection action selection 1	Units digit: Motor overload (11) 0: Free halt 1: Stop run as halt mode 2: Continue run Tens digit: Input phase loss (12) Hundreds digit: Output phase loss (13) Thousands digit: Outside fault (15) Ten thousands digit: Communication error (16)	00001	00000	○
F19.32	Fault protection action selection 2	Units digit: Encoder/PG card error (20) 0: Free halt Tens digit: Function parameter read error (21) 0: Free halt 1: Stop run as halt mode Hundreds digit: Reserve Thousands digit: Motor over hot (25) Ten thousands digit: Run time arrival (26)	00001	00000	○
F19.33	Fault protection action	Units digit: definite fault by users 1(27)	00001	00000	

	selection 3	0: Free halt 1: Stop run as halt mode 2: Continue run Tens digit: Definite fault by users 2(28) 0: Free halt 1: Stop run as halt mode 2: Continue run Hundreds digit: Time to power on(29) 0: Free halt 1: Stop run as halt mode 2: Continue run Thousands digit: Reserve Ten thousands digit: PID feedback loss while running (31) 0: Free halt 1: Stop run as halt mode 2: Continue run			
F19.34	Fault protection action selection 4	Units digit: Speed bias too much (42) 0: Free halt 1: Stop run as halt mode 2: Continue run Tens digit: Motor over speed(43) Hundreds digit: Original position error(51)	001	000	○
F19.35	Action selection when fault automatic reset	0: No action 1: Action	1	0	○
F19.36	Frequency selection for continue running when fault	0: Run on current frequency 1: Run on setting frequency 2: Run on upper limit frequency 3: Run on lower limit frequency 4: Run on abnormal standby frequency	1	0	○
F19.37	Abnormal standby frequency	0.0%～100.0% (100.0% correspond max frequency F01.08)	0.1%	100.0%	○
F19.38	Reserve				
F19.39	Over speed detection value	0.0%～50.0% (Max frequency)	0.1%	20.0%	○
F19.40	Over speed detection time	0.01s～0.60s	0.01s	0.01s	○
F19.41	Detection value when speed deviation is too large	0.0%～50.0% (Max frequency)	0.1%	20.0%	○
F19.42	Detection time when speed deviation is too large	0.0s: No detection 0.1 s～60.0s	0.1s	5.0s	○
F19.43	Reserve				
F19.44	Reserve				

F20-Reserved Parameter Group3					
Function code	**Name**	**Set Range**	**Min. Unit**	**Factory Default**	**Modifi -cation**
F20.00	Reserve				

F21-Reserved Parameter Group4					
Function code	Name	Set Range	Min. Unit	Factory Default	Modifi -cation
F21.00	Reserve				

F22 - Reserved Parameter Group5					
Function code	Name	Set Range	Min. Unit	Factory Default	Modifi -cation
F22.00	Reserve				

F23-Reserved Parameter Group6					
Function code	Name	Set Range	Min. Unit	Factory Default	Modifi -cation
F23.00	Reserve				

F24-Reserved Parameter Group7					
Function code	Name	Set Range	Min. Unit	Factory Default	Modifi -cation
F24.00	Reserve				

F25-Reserved Parameter Group8					
Function code	Name	Set Range	Min. Unit	Factory Default	Modifi -cation
F25.00	Reserve				

F26-FaultRecordFunctionParameterGroup					
Function Code	Name	Set Range	Min. Unit	Factory Default	Modifi -cation
F26.00	The first faultre cord type	0: No fault 1: Reserve 2: Over current at acceleration 3: Over current at deceleration 4: Over current at constant speed 5: Overvoltage at acceleration 6: Overvoltage at deceleration 7: Overvoltage at constant speed 8: Buffer resistance overload 9: Under voltage at run 10: Drive overload 11: Motor overload 12: Input phase loss 13: Output phase loss 14: Module overheat 15: External device fault 16: Communication fault	-	-	*

		17: Contactor fault 18: Current detect fault 19: Motor harmonic wave adjustment fault 20: Encoder/PG card fault 21: Parameter read-write error 22: Hardware fault 23: Motor short circuit to earth 24: Reserve 25: Reserve 26: Running time arrival 27: Fault defined by users 1 28: Fault defined by users 2 29: Time for power on arrival 30: Reserve 31: PID feed back lost 40: Rapid current limit over time 41: Switch motor while running 42: Speed bias too much 43: Motor over speed 45: Motor over hest 51: Original position error			
F26.01	The second fault record type	-	-	-	*
F26.02	The third (last) fault records type	-	-	-	*
F26.03	The third (last) fault records frequency	-	-	-	*
F26.04	The third (last) fault records current	-	-	-	*
F26.05	The third (last) fault records DC bus bar voltage	-	-	-	*
F26.06	The third (last) fault records input terminal situation	-	-	-	*
F26.07	The third (last) fault records output terminal situation	-	-	-	*
F26.08	The third (last) fault records VFD situation	-	-	-	*
F26.09	The third (last) fault records power on time	-	-	-	*
F26.10	The third (last) fault records running time				
F26.11	The third (last) fault records running time back electromotive force	-	-	-	*
F26.12	Reserve	-	-	-	*
F26.13	The second fault record frequency	-	-	-	*
F26.14	The second fault record	-	-	-	*

	current				
F26.15	The second fault record DC busbar voltage	-	-	-	*
F26.16	The second fault records input terminal situation	-	-	-	*
F26.17	The second fault records output terminal situation	-	-	-	*
F26.18	The second fault records VFD situation	-	-	-	*
F26.19	The second fault records power on time	-	-	-	*
F26.20	The second fault records running time	-	-	-	*
F26.21	The second fault records back electromotive force	-	-	-	*
F26.22	The first fault record frequency	-	-	-	*
F26.23	The first fault record current	-	-	-	*
F26.24	The first fault record DC bus bar voltage	-	-	-	*
F26.25	The first fault records input terminal situation	-	-	-	*
F26.26	The first fault records output terminal situation	-	-	-	*
F26.27	The first fault records VFD situation	-	-	-	*
F26.28	The first fault records power on time	-	-	-	*
F26.29	The first fault records running time	-	-	-	*
F26.30	The first fault records back electromotive force	-	-	-	*

F27-Pass word and Manu Facturer Function Parameter Group					
Function Code	**Name**	**Set Range**	**Min. Unit**	**Factory Default**	**Modifi -cation**
F27.00	User password	0～65535	1	00000	○
F27.01	Manufacturer password	0～65535	1	00000	○

C-Monitor Function Parameter Group					
Function Code	**Name**	**Set Range**	**Min. Unit**	**Factory Default**	**Modifi -cation**
C-00	Display the parameter of F00.01,F00.07 definition				
C-01	Display the parameter of F00.02,F00.08 definition				
C-02	Display the parameter of				

	F00.03,F00.09 definition				
C-03	Display the parameter of F00.04,F00.10 definition				
C-04	Display the parameter of F00.05,F00.11 definition				

(1) Corresponding relationship of input terminal status as below:

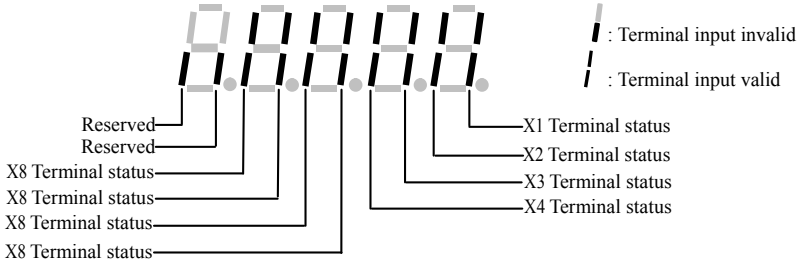

(2) Corresponding relationship of standard output terminal status as below:

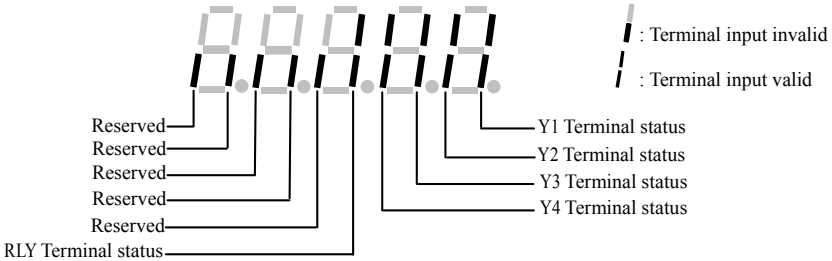

7 Troubleshooting

7.1 Failure and countermeasure

Possible failure types in EN650B/EN655 are shown in Table 7-1, The fault types including fault and alarm two kinds. Such as if inverter fault display E-XX, while the corresponding alarm is displayed in A-XX. Once the inverter failure, Fault types are stored in the F26 fault recording parameter group, and if alarm, alarm status has been revealed, until the alarm source release, alarm status are not logged to the F26 parameter group. Some failure code is reserved for intelligent automatic diagnosis function which will be executed continuously in future. When failure takes place in the inverter, the user should check according to note of these table first and record failure phenomena in details. Please contact our after-sale service and technical support Department or agent in your local place when technical service is needed.

Table 7-1 Failure type and the countermeasure

Fault type	Display	Possible reason	Countermeasure
Inverter unit protection	E-01	1. Short circuit of inverter output circuit 2. Long connection between motor and inverter 3. Module overheat 4. Internal wiring of the inverter loose 5. Main control board abnormal 6. Abnormal driving plate 7. Inverter module abnormal	1. Peripheral troubleshooting 2. Add reactor or output filter 3. Check whether the air duct is blocked, whether the fan is working properly and eliminate problems 4. Plug in all connections 5. Seek technical support 6. Seek technical support 7. Seek technical support
Overcurrent during accelerating process	E-02	1. Inverter output circuit has grounding or short circuit 2. The control mode is vector and there is no parameter tuning 3. The acceleration time is too short 4. Improper manual torque lift or V/F curve 5. Low voltage 6. Start the rotating motor 7. Sudden loading during acceleration 8. Inverter type is smaller	1. Peripheral troubleshooting 2. Motor parameter tuning 3. Increase acceleration time 4. Adjust manual lifting torque or V/F curve 5. Adjust the voltage to the normal range 6. Select speed tracking start or wait for the motor to stop before starting 7. Cancel sudden load 8. Choose a inverter with a larger power level
Overcurrent during decelerating process	E-03	1. Output circuit has grounding or short circuit 2. Control mode is vector and there is no parameter tuning 3. Deceleration time is too short 4. Low voltage 5. A sudden increase in load during deceleration 6. No brake unit and no brake resistance	1. Peripheral troubleshooting 2. Motor parameter tuning 3. Increase deceleration time 4. Adjust the voltage to the normal range 5. Cancel sudden load 6. Add brake unit and resistance
Overcurrent during decelerating process	E-04	1. Output circuit has grounding or short circuit 2. Control mode is vector and there is no parameter tuning 3. Low voltage 4. Whether there is sudden load in operation 5. Inverter selection is smaller	1. Peripheral troubleshooting 2. Motor parameter tuning 3. Adjust the voltage to the normal range 4. Cancel sudden load 5. Choose a inverter with a larger power level
Overvoltage during accelerating	E-05	1. High input voltage 2. There is external force to drive the motor in the acceleration process 3. Acceleration time is too short 4. No brake unit and no brake resistance	1. Adjust the voltage to the normal range 2. Remove additional force or add braking resistance 3. Increase acceleration time 4. Add brake unit and resistance
Overvoltage	E-06	1. High input voltage	1. Adjust the voltage to the normal range

during decelerating process		2. There is external force to drive the motor in the deceleration process 3. Deceleration time is too short 4. No brake unit and no brake resistance	2. Remove additional force or add braking resistance 3. Increase deceleration time 4. Add brake unit and resistance
Overvoltage during constant speed process	E-07	1. High input voltage 2. There is external force to drive the motor in the acceleration process	1. Adjust the voltage to the normal range 2. Remove additional force or add braking resistance
CONTROL SOURCE Fault	E-08	1. Input voltage is not within the scope of the specification	1. Adjust the voltage to the range required by the specification
Undervoltage fault	E-09	1. Momentary interruption 2. Input voltage is not in the range required by the specification 3. Bus voltage is abnormal 4. Rectifying bridge and buffer resistance are abnormal 5. Abnormal driving panel 6. Abnormal control panel	1. Reset the fault 2. Adjust the voltage to the normal range 3. Seek technical support 4. Seek technical support 5. Seek technical support 6. Seek technical support
Inverter overload	E-10	1. Whether the load is too large or the motor is blocked 2. Inverter selection is smaller	1. Reduce load and check motor and mechanical condition 2. Choose a inverter with a larger power level
Motor overload	E-11	1. Whether the motor protection parameters are set properly 2. Whether the load is too large or the motor is blocked 3. Inverter selection is smaller	1. Set this parameter correctly 2. Reduce load and check motor and mechanical condition 3. Choose a inverter with a larger power level
Input phase loss	E-12	1. Three-phase input power supply is abnormal 2. Abnormal driving plate 3. Lightning protection plate abnormal 4. Main control board is abnormal	1. Inspect and troubleshoot peripheral circuits 2. Seek technical support 3. Seek technical support 4. Seek technical support
Output phase loss	E-13	1. The lead from the inverter to the motor is abnormal 2. The three-phase output of the inverter is unbalanced when motor running 3. Abnormal driving plate 4. Abnormal module	1. Peripheral troubleshooting 2. Check whether the three-phase winding of the motor is normal and troubleshoot 3. Seek technical support 4. Seek technical support
Module overheat	E-14	1. Excessive ambient temperature 2. Air duct blockage 3. Fan damage 4. Module Thermistor Damage 5. Damage of Inverter Module	1. Reducing Environmental Temperature 2. Clean up the air duct 3. Replacement of Fans 4. Replacement of Thermistor 5. Replacement of Inverter Module
External equipment failure	E-15	1. Input signal of external fault through multi-function terminal DI 2. Input signal of external fault through virtual IO function	1. Reset Operation 2. Reset Operation
Communication failure	E-16	1. The upper computer is not working properly. 2. Abnormal communication lines 3. Incorrect parameter setting of communication expansion card 4. Incorrect Setting of Communication Parameters F5 Group	1. Check PC wiring 2. Check the communication connection 3. Correctly Setting the Type of Communication Extension Card 4. Correct Setting of Communication Parameters
Contactor failure	E-17	1. Abnormal driving board and power supply 2. Contactor abnormality	1. Replacement of Drive Board or Power Board 2. Replacement of contactors
Current Detection Fault	E-18	1. Check Hall device abnormal 2. Drive board abnormality	1. Replace Hall devices. 2. Replacement of Drive Plate
On-load tuning fault of motor	E-19	1. Torque upper limit parameter setting is too small 2. Setting the wrong number of encoder lines, setting the wrong	1. Increasing the parameters of the upper limit of torque 2. Check whether the number of encoder lines, rated frequency or rated speed is

		frequency or rated speed. 3. Encoder PG card is not connected or damaged. 4. The encoder type is not set correctly. 5. Too heavy load	set correctly. 3. Check whether the PG card is damaged or the connection is correct. 4. Check whether the encoder type is set correctly. 5. It may be that the load of the motor is too heavy. It is suggested to try to replace a larger model.
Code disk failure	E-20	The encoder or PG card is damaged or the UVW signal line is wrong.	Check the encoder and wiring is normal. Check whether the UVW signal line of PG card is loose or not connected Check whether the Z signal line is loose or not, and check the interference source. Check whether the UVW signal line of PG card is loose or not connected Check whether the Z signal line is loose or not, and check the interference source.
E^2PROM Read write fault	E-21	1. E^2PROM Chip damage	1. Replacement of Master Control Board
Frequency inverter Hardware Fault	E-22	1. Overvoltage 2. Overcurrent	1. Dealing with Overvoltage Fault 2. Dealing with Overcurrent Fault
Ground Short Circuit Fault	E-23	1. Short circuit of motor to ground	1. Replacement of cables or motors
Accumulated run time reach failure	E-26	1. Accumulative running time to set value	1. Clearing Record Information with Parameter Initialization Function
User-defined Fault 1	E-27	1. Input the user-defined fault 1 signal through the multi-function terminal DI 2. Input the user-defined fault 1 signal through the virtual IO function	1. Reset Operation 2. Reset Operation
User-defined Fault 2	E-28	1. Input the user-defined fault 2 signal through the multi-function terminal DI 2. Input user-defined fault 2 signal through virtual IO function	1. Reset Operation 2. Reset Operation
Accumulated power-on time reach failure	E-29	1. Accumulative power-on time reaches the set value	1. Clearing Record Information with Parameter Initialization Function
Load drop failure	E-30	1. The operating current of the inverter is less than the detection threshold of load drop.	1. Verify whether the load is off or drop-load detection parameters are set in accordance with the actual operating conditions.
Runtime PID Feedback Loss Fault	E-31	1. The PID feedback is less than the set value of feedback loss detection.	1. Check the feedback signal of PID or set the detection threshold of feedback as a suitable value.
Wave Current Limiting Fault	E-40	1. Whether the load is too large or the motor is blocked 2. Inverter selection is too smaller	1. Load reduction and inspection of motor and machinery 2. Select Inverters with Higher Power Level
Runtime Switching Motor Failure	E-41	1. Change the current motor selection through terminals during the operation of frequency converter	1. Motor switching operation after frequency converter shutdown
Fault of Excessive Speed Deviation	E-42	1, The encoder parameter is not set correctly. 2. No parameter tuning 3. The unreasonable setting of detection parameters with too large velocity deviation	1. Set encoder parameters correctly. 2. Tuning of motor parameters 3. Reasonable setting of detection parameters according to actual conditions
Overspeed fault of motor	E-43	1. The encoder parameter is not set correctly. 2. No parameter tuning 3. Unreasonable Setting of Motor Overspeed Detection Parameters	1. Set encoder parameters correctly. 2. Tuning of motor parameters 3. Reasonable setting of detection parameters according to actual conditions
Overtemperature fault of motor	E-45	1. Loose Wiring of Temperature Sensor 2. Motor temperature is too high	1. Detecting temperature sensor wiring and troubleshooting 2. Reducing carrier frequency or adopting

			other heat dissipation measures
Initial Position Angle Identification Fault	E-51	In SVC mode, the motor starts to run without stable stop, and the inductance value of the motor is too large because of the special motor with phase-loss output.	Prevent the motor from starting when it is not stable Check whether the motor drive line is connected The fault can be shielded by F19 parameters.

Note

(1) When the E-23 fault is reported, the frequency converter cannot be reset until the power cut off.
(2) In case of over-current fault, the frequency converter can be reset only after 2 seconds delay.
(3) When E-10 fault is reported, the reset time of 75 KW and above power models is 10 seconds, and that of 55 KW and below power models is 4 seconds.

7.2 Failure record lookup

This series inverter can record latest 3 failure code and inverter run parameter of the last 3 times failure, refer to these information can redound to finding out reason of the failure.

Failure information is all stored in F26 group parameter ,please enter into F26 group parameter to see about information by referring to keypad operation method.

Code	Content	Code	Content
F26.00	First failure type	F26.16	Input terminal status at second failure
F26.01	Second failure type	F26.17	Output terminal status at second failure
F26.02	Third (last time) fault type	F26.18	Second failure inverter status
F26.03	Third (last time) fault frequency	F26.19	Second failure power on time
F26.04	Third (last time) fault current	F26.20	Second failure running time
F26.05	Third (last time) fault bus voltage	F26.21	Second failure counter electromotive force
F26.06	Third (last time) fault Input terminal status	F26.22	Frequency at first failure
F26.07	Third(last time) fault Output terminal status	F26.23	Current at first failure
F26.08	Third (last time) fault inverter status	F26.24	Bus Voltage at First Fault
F26.09	Third (last time) fault Power on time	F26.25	Input terminal status at first failure
F26.10	Third (last time) fault running time	F26.26	Output terminal status at first failure
F26.11	Third (last time) fault ounter electromotive force	F26.27	First Fault Time Converter Status
F26.12	Reserve	F26.28	Power-on time at first failure
F26.13	Second failure frequency	F26.29	Running time at first failure
F26.14	Second failure current	F26.30	Counter electromotive force in the First Failure
F26.15	Second failure bus voltage	-	-

7.3 Failure reset

(1) Before reset you must find out reason of failure downright and eliminate it,otherwise may cause permanent damage to the inverter.
(2) If can't reset or failure takes place again after resetting, should look for reason and continuous resetting will damage the inverter.
(3) Reset should take place 5 minutes later after overload, overheat protection action.
(4) The reset is invalid, the motor wiring should be checked after power off, and restart the inverter.
(5) When E-23 fails, please do not operate directly after reset. It is necessary to check whether the input and output lines are connected in reverse.

To resume normal running when failure takes place in the inverter, you can choose following any kind of operation:

(1) After you set any terminal of X1~X8 to be inputted by external RESET, it will be off after connected to COM.

(2) When failure code is displayed, Press STOP RESET key after confirmed that it can be restoration.

(3) Communication reset. Please refer to annex description.

(4) Cut off power supply.

7.4 Alarm reset

When an alarm occurs, must eliminate alarm source which cause alarm, otherwise the alarm cannot be eliminated, also cannot be reset by reset button.

8 Maintenance

8.1 Routine maintenance

When you use this series you must assemble and operate it according to demand listed in this 《Service manual》 strictly. During run state, temperature, humidity, vibration and aging parts will affect it, which may cause failure of the inverter. To avoid this, it is recommended to perform routine inspections and maintenance.

Table 8-1 Daily inspection and maintenance items

Period		Inspection item
Daily	Periodic	
√		Daily cleaning: (1) Inverter should be maintained in a clean state (2) Clean up the dust on the surface of inverter, prevent the dust into the inverter internal (Especially metal dust). (3) Clean up the oil stain of cooling fan
	√	Check the air duct, and regularly clean.
	√	Check whether the screws is loose
	√	Check whether the inverter is corrode
√		Whether inverter installation environment changes
√		Whether the inverter cooling fan is working properly
√		Whether the inverter is overheating
√		When running whether voice of motor abnormal change.
√		Whether occur abnormal vibration when motor running
	√	Check wiring terminals have arc trace
	√	The main circuit insulation test

Recommend to inspect with following instrument:

Input voltage: electric voltmeter; Output voltage: rectifying voltmeter; Input output current: pincers ammeter.

8.2 Inspection and replacement of damageable parts

Some component parts in the inverter will be abraded or bear descending performance for long-term usage, To assure that the inverter can run stably and reliably, It is recommended to perform defending maintenance and replace corresponding parts if necessary.

(1) Cooling fan

Abnormal noise, Even oscillation may take place if the fan have wearing bearing, aging blade, here replacement of the fan should be considered.

(2) Filter electrolyte capacitance

When frequent-changing load causes increasing pulsant current and aging electrolyte under high ambient temperature, The electrolyte capacitance may be damaged and here should replace it.

8.3 Repair Guarantee

(1) We provide the free maintenance within warranty time if any failure or damage under normal usage, The warranty time can be seen in the 《Warranty card》, We will charge some when exceed warranty time.

(2) We will take some upkeep if one of following situations takes place within period of repair guarantee.

a. If did not use the inverter according to 《Service manual》 strictly or did not use it under ambient demanded in 《Service manual》, which cause failure.

b. Failure caused by applying the inverter to non-normal function;

c. Failure caused by self-repair, refit which is not already allowed;

d. Damage caused by bad keeping, Falling down from high place or other extrinsic factor after purchasing the inverter;

e. Failure caused by natural disaster or its reason such as unwonted voltage, Thunderbolt, water fog, fire, salt corroding, gas corroding, Earthquake and storm etc.;

f. Make bold to tear up product logo (Such as: nameplate etc.); Body serial number don't accord with that in repair guarantee card.

(3) We calculate service fee based on actual cost, Which is subject to contract if any.

(4) You can contact the agent and also our company directly if you have questions. After repair guarantee period, we shall also provide lifetime charged repair service for our products.

Note

Our company will also provide lifetime repair service with fee for inverter which is not within period of repair guarantee.

8.4 Storage

The user must pay attention to following points for temporary storage and long-term storage after purchasing the inverter:

(1) Avoid storing the inverter in high temperature, Moist place and place of dust, metal powder and assure good ventilation.

(2) Longtime storage will cause low quality of electrolyte capacitance, so must assure that it's electrified for one time within 1 year and electrification time is not shorter than 1 hour and input voltage must be increased to rated value gradually by voltage regulator of 250w, meanwhile the inverter should be cut off from the motor.

Appendix A EN655 Function parameter schedule graph

A.1 Symbol description

× ---- Parameter can't be changed in process of running

○ ---- Parameter can't be changed in process of running

* ---- Read-only parameter, unmodifiable.

A.2 Function parameter schedule graph.

F00-System Parameter Group					
Function code	**Name**	**Set range**	**Min. unit**	**Factory default**	**Modification**
F00.00	Reserve				
F00.01	C-00 display parameter selection when operation	0: Run frequency (Hz) 1: Set frequency (Hz) 2: Busbar voltage (V) 3: Output voltage (V) 4: Output current (A) 5: Output Power (kW) 6: Output torque (%) 7: X terminal input status 8: Y terminal output status 9: AI1 voltage (V) 10: AI2 voltage (V) / Current (mA) 11: Reserve 12: Count value 13: Length value 14: Load speed display 15: PID set 16: PID feedback 17: PLC stage 18: Input High-speed pulse frequency (KHz) 19: Feedback speed (Hz) 20: Remaining running time 21: AI1 Pre-correction voltage 22: AI2 Pre-correction voltage (V) /Current (mA) 23: Reserve 24: Line speed 25: Current power-on time 26: Current running time 27: Input High-speed pulse frequency (Hz) 28: Communication setting value 29: Encoder feedback speed (Hz) 30: Main frequency X display 31: Auxiliary frequency Y display 32～34: Reserve 35: Target torque (%)	1	0	○

		36: Rotational position 37: Power factor angle 38: ABZ position 39: VF Separation target voltage 40: VF Separate output voltage 41: X terminal input status visual display 42: Y terminal output status visual display 43: Reserve 44: Reserve 45: Error details 46～58: Reserve 59: Setting frequency (%) 60: Operating frequency (%) 61: Inverter status 62: Module temperature 63: Feedback speed (r/min) 64: Encoder feedback speed（r/min） 65: Dormancy (0: normal state; 1: lower than sleep frequency at startup; 2: sleep state) 66～78: Reserve			
F00.02	C-01 display parameter selection when operation	Same as above	1	1	○
F00.03	C-02 display parameter selection when operation	Same as above	1	4	○
F00.04	C-03 display parameter selection when operation	Same as above	1	3	○
F00.05	C-04 display parameter selection when operation	Same as above	1	2	○
F00.06	C-05 display parameter selection when operation	Same as above	1	62	○
F00.07	C-00 display parameter selection when stop	Same as above	1	1	○
F00.08	C-01 display parameter selection when stop	Same as above	1	2	○
F00.09	C-02 display parameter selection when stop	Same as above	1	7	○
F00.10	C-03 display parameter selection when stop	Same as above	1	8	○
F00.11	C-04 display parameter selection when stop	Same as above	1	9	○
F00.12	C-05 display parameter selection when stop	Same as above	1	10	○
F00.13	Reserve				
F00.14	Parameter initialization	0: No operation 01: Restore factory parameters, excluding motor parameters 02: Clear record information 04: Back up user current parameters 501: Restore user backup parameters	001	000	×

F00.15	M key function selection	0: M key is invalid 1: Operation panel command channel and remote command channel (Terminal command channel or communication command channel) 2: Forward/Reverse switching (Valid for speed control, prohibited for use in torque mode) 3: Forward Jog 4: Reverse Jog	1	0	×
F00.16	REV/JOG key function selection	0:Forward/Reverse switching (Valid for speed control, Prohibited for use in torque mode) 1: Forward Jog 2: Reverse Jog	1	1	×
F00.17	Load speed display factor	0.0001～6.5000	0.0001	1.0000	○
F00.18	Feedback speed display factor	1～10	1	2	○
F00.19	STOP/RESET key function	0: The STOP/RES key stop function is valid only in keyboard operation mode 1: The STOP/RES key stop function is valid in any mode of operation.	1	1	○
F00.20	Reserve				
F00.21	Reserve				
F00.22	Reserve				
F00.23	GP style display	1: G Type (Constant torque load type) 2: P type (Fan, pump type load type)	1	Model determination	*
F00.24	1st motor control mode	0: Speed sensor less vector control (SVC) 1: Speed sensor vector control (FVC) 2: V/F control	1	0	×
F00.25	Reserve				
F00.26	Reserve				
F00.27	Reserve				

F01-Basic Run Function Parameter Group					
Function code	**Name**	**Set range**	**Min. unit**	**Factory default**	**Modification**
F01.00	Main frequency command input selection	0: Digital setting (Power-down without memory) 1: Digital setting (Power down memory) 2: AI1 3: AI2 4: Reserve 5: Pulse setting (X8) 6: Multi-segment instruction 7: simple PLC 8: PID 9: Communication given	1	0	×
F01.01	Preset frequency	0.00Hz～Max. frequency (F01.08)	0.01Hz	50.00Hz	○

F01.02	Digital setting frequency shutdown memory selection	0: No memory 1: Memory	1	0	×
F01.03	Auxiliary frequency command input selection	Same as F01.00 (Main frequency command input selection)	1	0	×
F01.04	Serve				
F01.05	Serve				
F01.06	Frequency command overlay selection	Units digit: Frequency source selection 0: Main frequency command 1: Main and auxiliary operation results (The operation relationship is determined by ten digits) 2: Main frequency command and auxiliary frequency command switching 3: Main frequency command and main and auxiliary operation result switching 4: Auxiliary frequency command and main and auxiliary operation result switching Tens digits: frequency source primary and secondary operation relationship 0: Main + auxiliary 1: Main - auxiliary 2: Maximum of both 3: Minimum of both	01	00	×
F01.07	Reserve				
F01.08	Max. frequency	5.00Hz～500.00Hz	0.01Hz	50.00Hz	×
F01.09	Auxiliary frequency command range selection during superposition	0: Relative to the maximum frequency 1: Relative to the frequency source instruction	1	0	×
F01.10	Auxiliary frequency command range when superimposing	0%～150%	1%	100%	×
F01.11	Upper limit frequency	Lower limit frequency F01.12～max. frequency F01.08	0.01Hz	50.00Hz	×
F01.12	Lower limit frequency	0.00Hz～Upper limit frequency F01.11	0.01Hz	0.00Hz	×
F01.13	Set the frequency lower than the lower limit frequency operation mode	0: Running at the following frequency limit 1: Stop 2: 0 Speed run	1	0	○
F01.14	Reserve				
F01.15	Run command selection	0: Operation panel 1: Terminal 2: Communication	1	0	×
F01.16	Running direction	0: Running in the default direction 1: Run in the opposite direction to the default direction	1	0	×
F01.17	Acceleration time 1	0.00s～650.00s (F01.19=2) 0.0s～6500.0s (F01.19=1) 0s～65000s (F01.19=0)	-	Model determination	×
F01.18	Deceleration time 1	0.00s～650.00s（F01.19=2）	-	Model	×

		0.0s～6500.0s（F01.19=1） 0s～65000s（F01.19=0）		determination	
F01.19	Acceleration/Deceleration unit	0: 1 second 1: 0.1 second 2: 0.01 second	-	1	×
F01.20	Acceleration and deceleration	0: Linear acceleration and deceleration 1: Static S curve acceleration and deceleration	1	0	×
F01.21	S curve starting time ratio	0.0～(100.0%-F01.22)	0.1%	30.0%	×
F01.22	S curve end period time ratio	0.0～(100.0%-F01.21)	0.1%	30.0%	×
F01.23	Reserve				
F01.24	Reserve				
F01.25	Jog running frequency	0.00Hz～max .frequency F01.08	0.01Hz	2.00Hz	○
F01.26	Reserve				
F01.27	Reserve				
F01.28	Jog acceleration time	0.0s～6500.0s	0.1s	20.0s	○
F01.29	Jog deceleration time	0.0s～6500.0s	0.1s	20.0s	○

F02-Star, Stop, Forward/Reverse, Brake function parameter group					
Function code	**Name**	**Set range**	**Min. unit**	**Factory default**	**Modification**
F02.00	Startup mode	0: Direct start 1: Speed tracking start (Valid in vector mode) 2: Pre-excitation start (Valid in vector mode)	1	0	*
F02.01	Speed tracking method	0: Starting from the stop frequency 1: Starting from the power frequency 2: Starting from the maximum frequency	1	0	×
F02.02	Starting frequency	0.00Hz～10.00Hz	0.01Hz	0.00Hz	○
F02.03	Start frequency hold time	0.0s～100.0s	0.1s	0.0s	×
F02.04	Start DC braking current/ Pre-excitation current	0%～100%	1%	0%	×
F02.05	Start DC time/Pre-excitation time	0.0s～100.0s	0.1s	0.0s	×
F02.06	Wake-up frequency	Sleep frequency (F02.08) ～Maximum frequency (F01.08)	0.01Hz	0.00Hz	○
F02.07	Wake-up delay time	0.0s～6500.0s	0.1s	0.0s	○
F02.08	Sleep frequency	0.00Hz～Wake-up frequency (F02.06)	0.01Hz	0.00Hz	○
F02.09	Sleep delay time	0.0s～6500.0s	0.1s	0.0s	○
F02.10	Reserve				
F02.11	Stop mode	0: Deceleration stop 1: Free stop	1	0	×
F02.12	Speed tracking	1～100	1	20	○
F02.13	Stop DC braking start frequency	0.00Hz～Maximum frequency	0.01Hz	0.00Hz	×
F02.14	DC brake waiting time	0.00s～100.00s	0.01s	0.00s	×
F02.15	DC braking current at stop	0%～100%	1%	0%	×
F02.16	DC braking time at stop	0.0s～100.0s	0.1s	0.0s	×

F02.17	Speed tracking current	30%～200%	1%	Model determination	○
F02.18	Reserve				
F02.19	Reserve				
F02.20	Positive reversal dead time	0.0s～3000.0s	0.1s	0.0s	○
F02.21	Reverse frequency prohibition	0: Invalid 1: Valid	1	0	○
F02.22	Reserve				
F02.23	Brake unit action starting voltage	650.0V～800.0V	0.1V	720.0V	×
F02.24	Brake usage rate	0%～100%	1%	100%	○
F02.25	Reserve				
F02.26	Reserve				

F03－V/F control parameter group					
Function code	**Name**	**Set range**	**Min. unit**	**Factory default**	**Modification**
F03.00	V/F Curve setting	0: Straight line V/F 1: Multipoint V/F 2～9: Reserve 10: VF Complete separation mode 11: VF Semi-separated mode	1	0	×
F03.01	Torque boost	0.0%～30.0% (0.0%: No torque boost)	0.1%	Model determination	○
F03.02	Torque boost cutoff frequency	0.00Hz～Maximum frequency	0.01Hz	50.00Hz	×
F03.03	Multi-point V/F frequency point 1	0.00Hz～F03.05	0.01Hz	0.00Hz	×
F03.04	Multi-point V/F voltage point 1	0.0%～100.0%	0.1%	0.0%	×
F03.05	Multi-point V/F frequency point 2	F03.03～F03.07	0.01Hz	0.00Hz	×
F03.06	Multi-point V/F voltage point 2	0.0%～100.0%	0.1%	0.0%	×
F03.07	Multi-point V/F frequency point 3	F03.05～Motor rated frequency (F15.04)	0.01Hz	0.00Hz	×
F03.08	Multi-point V/F voltage point 3	0.0%～100.0%	0.1%	0.0%	×
F03.09	V/F Over excitation gain	0～200	1	64	○
F03.10	V/F Oscillation suppression gain	0～100	1	Model determination	○
F03.11	V/F Separate voltage source	0: Digital setting (F03.12) 1: AI1 2: AI2 3: Reserve 4: Pulse setting (X8) 5: Multi-segment instruction 6: Simple PLC 7: Reserve 8: Communication given Note: 100.0% corresponds to the rated	1	0	×

		voltage of the motor			
F03.12	V/F separation voltage digital setting	0V～Motor rated voltage	1V	0V	○
F03.13	V/F separation voltage acceleration and deceleration time	0.0s～1000.0s Note: Indicates the time when 0V changes to the rated voltage of the motor.	0.1s	0.0s	×
F03.14	Reserve				
F03.15	Overcurrent stall action current	50%～200%	1%	150%	×
F03.16	Over-speed enable	0: Invalid 1: Valid	1	1	×
F03.17	Over-speed rejection gain	0～100	1	20	○
F03.18	Over-speed compensation coefficient	50%～200%	1%	50%	×
F03.19	Overvoltage stall operating voltage	650.0V～800.0V	0.1V	760.0V	×
F03.20	Overvoltage stall enable	0: Valid 1: Invalid	1	1	×
F03.21	Overvoltage stall suppression frequency gain	0～100	1	30	○
F03.22	Overvoltage stall suppression voltage gain	0～100	1	30	○
F03.23	Overvoltage stall maximum rising frequency limit	0～50Hz	1Hz	5Hz	×

F04-Auxiliary Running Parameter Group					
Function code	**Name**	**Set range**	**Min. unit**	**Factory default**	**Modification**
F04.00	Jump freq. 1	0.00Hz～max. frequency	0.01Hz	0.00Hz	○
F04.01	reserve				
F04.02	Jump freq. 2	0.00Hz～max. frequency	0.01Hz	0.00Hz	○
F04.03	Jump frequency amplitude	0.00Hz～max. frequency	0.01Hz	0.00Hz	○
F04.04	Whether the jump frequency is valid during acceleration and deceleration	0: Invalid 1: Valid	1	0	○
F04.05 ～ F04.07	Reserve				
F04.08	DPWM switching upper limit frequency	5.00Hz～15.00Hz	0.01Hz	12.00Hz	○
F04.09	Carrier frequency	0.5kHz～16.0kHz	0.1kHz	Model determination	○
F04.10	Reserve				
F04.11	PWM modulation method	0: Asynchronous modulation 1: Synchronous modulation	1	0	○
F04.12	Dead zone compensation mode selection	0: No compensation 1: Compensation mode 1	1	1	○
F04.13	Random PWM depth	0: Random PWM is invalid 1～10: PWM carrier frequency random depth	1	0	○

F04.14	Acceleration time 1 and acceleration time 2 switch frequency points	0.00Hz～Maximum frequency	0.01Hz	0.00Hz	○
F04.15	Deceleration time 1 and deceleration time 2 switch frequency point	0.00Hz～Maximum frequency	0.01Hz	0.00Hz	○
F04.16	Acceleration time 2	0.0s～6500.0s	0.1s	Model determination	○
F04.17	Deceleration time 2	0.0s～6500.0s	0.1s	Model determination	○
F04.18	Acceleration time 3	0.0s～6500.0s	0.1s	Model determination	○
F04.19	Deceleration time 3	0.0s～6500.0s	0.1s	Model determination	○
F04.20	Acceleration time 4	0.0s～6500.0s	0.1s	0.0s	○
F04.21	Deceleration time 4	0.0s～6500.0s	0.1s	0.0s	○
F04.22 ～ F04.43	Reserve				

F05-Communication Control Parameter Group					
Function code	**Name**	**Set range**	**Min. unit**	**Factory default**	**Modification**
F05.00	Communication protocol selection	0: Modbus protocol 1: Reserve 2: Reserve	1	0	×
F05.01	Communication baud rate	Units digit: Modbus 0: 300BPS 1: 600BPS 2: 1200BPS 3: 2400BPS 4: 4800BPS 5: 9600BPS 6: 19200BPS 7: 38400BPS 8: 57600BPS 9: 115200BPS Tens digit: Reserve Hundreds digit: Reserve Thousands digit: Reserve	0001	5005	○
F05.02	Modbus Data Format	0: No verify (8-N-2) 1: Even verify (8-E-1) 2: Odd verify (8-O-1) 3: No verify (8-N-1)	1	0	○
F05.03	Local address	0: Broadcast address 1～247	1	1	○
F05.04	Serial communication timeout	0.0: Invalid 0.1～60.0s	0.1s	0.0s	○
F05.05	Reserve				
F05.06	Modbus response delay	0～20ms	1ms	2ms	○

F05.07	Reserve				
F05.08	Modbus communication date format	Unit digit Modbus 0: Reserve 1: Standard Modbus protocol Ten digit: Reserve	01	31	○
F05.09 ～ F05.37	Reserve				
F05.38	Cumulative power-on time	0h～65535h	1h	-	*
F05.39	Cumulative running time	0h～65535h	1h	-	*

F06-Setting Curve Parameter Group					
Function code	**Name**	**Set range**	**Min. unit**	**Factory default**	**Modification**
F06.00	AI curve selection	Units digit: AI1 curve selection 1: Curve 1 (2 point, F06.01～F06.04) 2: Curve 2 (2 point, F06.06～F06.09) 3: Curve 3 (2 point, F06.11～F06.14) 4: Curve 4 (4 point, F06.17～F06.24) 5: Curve 5 (4 point, F06.25～F06.32) Tens digit: AI2 curve selection, same as above Hundreds digit: Reserve	001	321	○
F06.01	AI curve 1 minimum input	0.00V～F06.03	0.01V	0.00V	○
F06.02	AI curve 1 minimum input corresponding setting	-100.0%～100.0%	0.1%	0.0%	○
F06.03	AI curve 1 maximum input	F06.01～+10.00V	0.01V	10.00V	○
F06.04	AI curve 1 maximum input corresponding setting	-100.0%～100.0%	0.1%	100.0%	○
F06.05	AI1 filtering time	0.00s～10.00s	0.01s	0.10s	○
F06.06	AI curve 2 minimum input	0.00V～F06.08	0.01V	0.00V	○
F06.07	AI curve 2 minimum input corresponding setting	-100.0%～100.0%	0.1%	0.0%	○
F06.08	AI curve 2 maximum input	F06.06～+10.00V	0.01V	10.00V	○
F06.09	AI curve 2 maximum input corresponding setting	-100.0%～100.0%	0.1%	100%	○
F06.10	AI2 filter time	0.00s～10.00s	0.01s	0.10s	○
F06.11	AI curve 3 minimum input	-10.00V～F06.13	0.01V	-10.00V	○
F06.12	AI Curve 3 minimum input corresponding setting	-100.0%～100.0%	0.1%	-100.0%	○
F06.13	AI curve 3 maximum input	F06.11～+10.00V	0.01V	10.00V	○
F06.14	AI curve 3 maximum input corresponding setting	-100.0%～100.0%	0.1%	100%	○
F06.15	AI3 filtering time	0.00s～10.00s	0.01s	0.10s	○
F06.16	AI is below the minimum setting selection	Units digit: AI1 is below the minimum input setting selection 0: Corresponding to the minimum input setting 1: 0.0%	001	000	○

		Tens digit: AI2 is below the minimum input setting selection, same as above Hundreds: Reserve			
F06.17	AI curve 4 minimum input	-10.00V～F06.19	0.01V	0.00V	○
F06.18	AI curve 4 minimum input corresponding setting	-100.0%～+100.0%	0.1%	0.00%	○
F06.19	AI curve 4 inflection point 1 input	F06.17～F06.21	0.01V	3.00V	○
F06.20	AI curve 4 inflection point 1 input corresponding setting	-100.0%～+100.0%	0.1%	30.00%	○
F06.21	AI curve 4 inflection point 2 input	F06.19～F06.23	0.01V	6.00V	○
F06.22	AI curve 4 inflection point 2 input corresponding setting	-100.0%～+100.0%	0.1%	60.00%	○
F06.23	AI curve 4 maximum input	F06.21～+10.00V	0.01V	10.00V	○
F06.24	AI curve 4 maximum input corresponding setting	-100.0%～+100.0%	0.1%	100.00%	○
F06.25	AI curve 5 minimum input	-10.00V～F06.27	0.01V	-10.00V	○
F06.26	AI curve 5 minimum input corresponding setting	-100.0%～ +100.0%	0.1%	-100.00%	○
F06.27	AI curve 5 inflection point 1 input	F06.25～F06.29	0.01V	-3.00V	○
F06.28	AI curve 5 inflection point 1 input corresponding setting	-100.0%～+100.0%	0.1%	-30.00%	○
F06.29	AI curve 5 inflection point 2 input	F06.27～F06.31	0.01V	3.00V	○
F06.30	AI curve 5 inflection point 2 input corresponding setting	-100.0%～+100.0%	0.1%	30.00%	○
F06.31	AI curve 5 maximum input	F06.29～+10.00V	0.01V	10.00V	○
F06.32	AI curve 5 maximum input corresponding setting	-100.0%～+100.0%	0.1%	100.00%	○

F07-Analog, Pulse input function parameter group					
Function code	**Name**	**Set range**	**Min. unit**	**Factory default**	**Modification**
F07.00	Function selection when AI1 terminal is used as X terminal	0～59	1	0	×
F07.01	Function selection when AI2 terminal is used as X terminal	0～59	1	0	×
F07.02	Reserve				
F07.03	Effective mode selection when AI terminal is used as X terminal	0: Active high 1: Active low Unit digit: AI1 Ten digit: AI2 Hundred digit: Reserve	1	0	×
F07.04 ～ F07.06	Reserve				
F07.07	Pulse input minimum frequency	0.00kHz～F07.09	0.01kHz	0.00kHz	○

F07.08	Pulse minimum input frequency corresponding setting	-100.0%～100.0%	0.1%	0.0%	○
F07.09	Pulse input maximum frequency	F07.07～100.00kHz	0.01kHz	50.00kHz	○
F07.10	Pulse maximum input frequency corresponding setting	-100.0%～100.0%	0.1%	100.0%	○
F07.11	Pulse filtering time	0.00s～10.00s	0.01s	0.10s	○
F07.12 ～ F07.17	Reserve				

F08-On-off input function parameter group					
Function code	**Name**	**Set range**	**Min. unit**	**Factory default**	**Modification**
F08.00	X terminal valid mode selection 1	0: Active low 1: Active high Units digit: X1 Terminal Tens digit: X2 Terminal Hundreds digit: X3 Terminal Thousands digit: X4 Terminal Ten thousands digit: X5 Terminal	00001	00000	×
F08.01	X terminal filter time	0.000s～1.000s	0.001s	0.010s	○
F08.02	X1 delay time	0.0s～3600.0s	0.1s	0.0s	×
F08.03	X2 delay time	0.0s～3600.0s	0.1s	0.0s	×
F08.04	X3 delay time	0.0s～3600.0s	0.1s	0.0s	×
F08.05	X terminal valid mode selection 2	0: Active low 1: Active high Unit digit: X6 Terminal Ten digit: X7 Terminal Hundred digit: X8 Terminal Hundred digit: Reserve Ten thousand digit: Reserve	00001	00000	×
F08.06 ～ F08.17	Reserve				
F08.18	X1 terminal function selection	0: No function 1: Running FWD or running commands 2: Reverse running REV or forward and reverse running direction (Note: When set to 1, 2, It needs to be used with F08.26. For details, please refer to the function code parameter description.) 3: Three-wire operation control 4: Forward jog (FJOG) 5: Reserve jog (RJOG) 6: Terminal UP 7: Terminal DOWN 8: Free stop 9: Fault reset (RESET) 10: Run pause	1	1	×

		11: External fault normally open input 12: Multi-stage command terminal 1 13: Multi-stage command terminal 2 14: Multi-stage command terminal 3 15: Multi-stage command terminal 4 16: Acceleration/Deceleration time selection terminal 1 17: Acceleration/Deceleration time selection terminal 2 18: Frequency source switching 19: UP/DOWN Set to clear (Terminal, keyboard) 20: Control command switching terminal 1 21: Acceleration and deceleration prohibited 22: PID pause 23: PLC status reset 24: Swing frequency pause 25: Counter input 26: Counter reset 27: Length count input 28: Length reset 29: Torque control prohibited 30: PULSE frequency input (Only valid for X8) 31: Reserve 32: Immediate DC braking 33: External fault normally closed input 34: Frequency modification enable 35: PID action direction is reversed 36: External parking terminal 1 37: Control command switching terminal 2 38: PID integration pause 39: Main frequency and preset frequency switching 40: Secondary frequency and preset frequency switching 41: Reserve 42: Reserve 43: PID parameter switching 44: User-defined fault 1 45: User-defined fault 2 46: Speed control/Torque control switching 47: Emergency pull over 48: External parking terminal 2 49: Deceleration DC braking 50: This run time is cleared 51～59: Reserve			

F08.19	X2 terminal function selection	Same as above	1	4	×
F08.20	X3 terminal function selection	Same as above	1	9	×
F08.21	X4 terminal function selection	Same as above	1	12	×
F08.22	X5 terminal function selection	Same as above	1	13	×
F08.23	X6 terminal function selection	Same as above	1	0	×
F08.24	X7 terminal function selection	Same as above	1	0	×
F08.25	X8 terminal function selection	Same as above	1	0	×
F08.26	Terminal command mode	0: Two-wire 1 1: Two-wire 2 2: Three-wire 1 3: Three-wire 2	1	0	×
F08.27 ～ F08.31	Reserve				

F09-On-off, Analog output function parameter group					
Function code	**Name**	**Set range**	**Min. unit**	**Factory default**	**Modification**
F09.00	Y1 output function selection	0: No output 1: Inverter running 2: Error output (Failure for free shutdown) 3: Frequency level detection FDT1 output 4: Frequency arrival 5: Zero speed operation (Not output when stopped) 6: Motor overload pre-alarm 7: Inverter overload pre-alarm 8: Set the value to arrive 9: Specify the value to arrive 10: Length reached 11: PLC cycle completed 12: Cumulative running time arrives 13: Frequency limit 14: Torque limit 15: Ready to run 16: AI1＞AI2 17: Upper limit frequency arrival 18: Lower limit frequency arrival (Operation related) 19: Under voltage status output 20: Communication setting 21: Reserve 22: Reserve 23: Zero speed running 2 (Output also when stopping) 24: Cumulative power-on time arrives 25: Frequency level detection FDT2 output 26: Frequency 1 reaches the output 27: Frequency 2 reaches the output 28: Current 1 reaches the output	1	1	○

		29: Current 2 reaches the output 30: Timing arrival output 31: AI1 input overrun 32: reserve 33: Reverse running 34: Zero current state 35: Module temperature reached 36: Output current overrun 37: The lower limit frequency arrives (the output is also stopped) 38: Alarm output (All faults) 39: Reserve 40: This running time arrives 41: Fault output (for free stop fault and under voltage not output)			
F09.01	Y2 output function selection	Same as above	1	4	○
F09.02	Y3 output function selection	Same as above	1	0	○
F09.03	Y4 output function selection (Multiplexed DO terminal)	Same as above	1	0	○
F09.04	Control board relay function selection (T/A-T/B-T/C)	Same as above	1	2	○
F09.05	Frequency arrival detection range	0.0%～100.0% (Maximum frequency)	0.1%	0.0%	○
F09.06	Frequency detection value 1	0.00Hz～Maximum frequency	0.01Hz	50.00Hz	○
F09.07	Frequency detection lag rate 1	0.0%～100.0% (FDT1 level)	0.1%	5.0%	○
F09.08	Frequency detection value 2	0.00Hz～Maximum frequency	0.01Hz	50.00Hz	○
F09.09	Frequency detection lag rate 2	0.0%～100.0% (FDT2 level)	0.1%	5.0%	○
F09.10	AI1 input voltage protection value lower limit	0.00V～F09.11	0.01V	3.10V	○
F09.11	AI1 input voltage protection value upper limit	F09.10～10.00V	0.01V	6.80V	○
F09.12	Zero current detection level	0.0%～300.0% (100.0% corresponds to the rated current of the motor)	0.1%	5.0%	○
F09.13	Zero current detection delay time	0.01s～600.00s	0.01s	0.10s	○
F09.14	Exceeding current limit	0.0% (No detection) 0.1%～300.0% (Motor rated current)	0.1%	200.0%	○
F09.15	Exceeding current overrun detection delay time	0.01s～600.00s	0.01s	0.00s	○

F09.16	Arbitrary arrival current 1	0.0%～300.0% (100.0% corresponds to the rated current of the motor)	0.1%	100.0%	○
F09.17	Arbitrary current 1 amplitude	0.0%～300.0% (100.0% corresponds to the rated current of the motor)	0.1%	0.0%	○
F09.18	Arbitrary arrival current 2	0.0%～300.0% (100.0% corresponds to the rated current of the motor)	0.1%	100.0%	○
F09.19	Arbitrary current 2 amplitude	0.0%～300.0% (100.0% corresponds to the rated current of the motor)	0.1%	0.0%	○
F09.20	Arbitrary arrival frequency detection value 1	0.00Hz～Maximum frequency	0.01Hz	50.00Hz	○
F09.21	Arbitrary arrival frequency detection amplitude 1	0.0%～100.0% (Maximum frequency)	0.1%	0.0%	○
F09.22	Arbitrary arrival frequency detection value 2	0.00Hz～Maximum frequency	0.01Hz	50.00Hz	○
F09.23	Arbitrary arrival frequency detection amplitude 2	0.0%～100.0% (Maximum frequency)	0.1%	0.0%	○
F09.24	Multi-function output terminal effective state selection	0: Positive logic 1: Anti-logic Units digit: Y1 Tens digit: Y2 Hundreds digit: Y3 Thousands digit: Y4 Ten thousands digit: RELAY1	00001	00000	○
F09.25	Y1 output delay time	0.0s～3600.0s	0.1s	0.0s	○
F09.26	Y2 output delay time	0.0s～3600.0s	0.1s	0.0s	○
F09.27	Y3 output delay time	0.0s～3600.0s	0.1s	0.0s	○
F09.28	Y4 output delay time	0.0s～3600.0s	0.1s	0.0s	○
F09.29	RELAY1 output delay time	0.0s～3600.0s	0.1s	0.0s	○
F09.30 ～ F09.34	Reserve				
F09.35	AO1 output function selection	0: Operating frequency 1: Setting frequency 2: Output current 3: Output torque (Torque absolute value) 4: Output Power 5: Output voltage (100% corresponds to 1.2 times rated voltage) 6: PULSE input (100% corresponds to 100kHz) 7: AI1 8: AI2 9: Reserve 10: Length 11: Value 12: Communication setting 13: Motor speed	1	0	○

		14: Output current (100% corresponds to 1000A) 15: Bus voltage (100% corresponds to 1000V) 16: Output torque (0 to 100% corresponds to -200% to 200% of rated torque)			
F09.36	AO2 Output function selection	Same as above	1	0	○
F09.37	DO output function selection (multiplexing Y4 terminal)	Same as above	1	0	○
F09.38	Y4/DO terminal output mode selection	0: Pulse output (DO) 1: Switch output (Y4)	1	0	○
F09.39	reserve				
F09.40	AO1 zero offset coefficient	-100.0%～+100.0%	0.1%	0.0%	○
F09.41	AO1 gain	-10.00～+10.00	0.01	1.00	○
F09.42	reserve				
F09.43	AO2 zero offset coefficient	-100.0%～+100.0%	0.1%	0.0%	○
F09.44	AO2 gain	-10.00～+10.00	0.01	1.00	○
F09.45	Reserve				
F09.46	Reserve				
F09.47	DO output maximum frequency	0.01kHz～100.00kHz	0.01 kHz	50.00 kHz	○
F09.48 ～ F09.50	Reserve				

F10-Simple PLC/Multi-speed function parameter group					
Function code	**Name**	**Set range**	**Min. unit**	**Factory default**	**Modification**
F10.00	Simple PLC operation mode	0: Single run end shutdown 1: End of single run to maintain final value 2: Always cycling	1	0	○
F10.01	Simple PLC power-down memory selection	Units digit: Power-down memory selection 0: Power failure does not remember 1: Power-down memory Tens digit: Stop memory selection 0: Stop without memory 1: Shutdown memory	01	00	○
F10.02	Simple PLC section 0 running time	0.0s (h)～6500.0s (h)	0.1s(h)	0.0s(h)	○
F10.03	Simple PLC 0th section acceleration and deceleration time selection	0～3	1	0	○
F10.04	Simple PLC section 1 running time	0.0s(h)～6500.0s(h)	0.1s(h)	0.0s(h)	○
F10.05	Simple PLC 1st section acceleration and deceleration time selection	0～3	1	0	○

F10.06	Simple PLC section 2 running time	0.0s (h)～6500.0s (h)	0.1s(h)	0.0s(h)	○
F10.07	Simple PLC 2nd section acceleration and deceleration time selection	0～3	1	0	○
F10.08	Simple PLC section 3 running time	0.0s (h)～6500.0s (h)	0.1s(h)	0.0s(h)	○
F10.09	Simple PLC 3rd section acceleration and deceleration time selection	0～3	1	0	○
F10.10	Simple PLC section 4 running time	0.0s (h)～6500.0s (h)	0.1s(h)	0.0s(h)	○
F10.11	Simple PLC 3th section acceleration and deceleration time selection	0～3	1	0	○
F10.12	Simple PLC section 5 running time	0.0s (h)～6500.0s (h)	0.1s(h)	0.0s(h)	○
F10.13	Simple PLC 5th section acceleration and deceleration time selection	0～3	1	0	○
F10.14	Simple PLC section 6 running time	0.0s (h)～6500.0s (h)	0.1s(h)	0.0s(h)	○
F10.15	Simple PLC 6th section acceleration and deceleration time selection	0～3	1	0	○
F10.16	Simple PLC section 7 running time	0.0s (h)～6500.0s (h)	0.1s(h)	0.0s(h)	○
F10.17	Simple PLC 7th section acceleration and deceleration time selection	0～3	1	0	○
F10.18	Simple PLC section 8 running time	0.0s (h)～6500.0s (h)	0.1s(h)	0.0s(h)	○
F10.19	Simple PLC 8th section acceleration and deceleration time selection	0～3	1	0	○
F10.20	Simple PLC section 9 running time	0.0s (h)～6500.0s (h)	0.1s(h)	0.0s(h)	○
F10.21	Simple PLC 9th section acceleration and deceleration time selection	0～3	1	0	○
F10.22	Simple PLC section 10 running time	0.0s (h)～6500.0s (h)	0.1s(h)	0.0s(h)	○
F10.23	Simple PLC 10th section acceleration and deceleration time selection	0～3	1	0	○
F10.24	Simple PLC section 11 running time	0.0s (h)～6500.0s (h)	0.1s(h)	0.0s(h)	○
F10.25	Simple PLC 11th section acceleration and deceleration time selection	0～3	1	0	○

F10.26	Simple PLC section 12 running time	0.0s (h)～6500.0s (h)	0.1s(h)	0.0s(h)	○
F10.27	Simple PLC 12th section acceleration and deceleration time selection	0～3	1	0	○
F10.28	Simple PLC section 13 running time	0.0s (h)～6500.0s (h)	0.1s(h)	0.0s(h)	○
F10.29	Simple PLC 13th section acceleration and deceleration time selection	0～3	1	0	○
F10.30	Simple PLC section 14 running time	0.0s (h)～6500.0s (h)	0.1s(h)	0.0s(h)	○
F10.31	Simple PLC 14th section acceleration and deceleration time selection	0～3	1	0	○
F10.32	Simple PLC section 15 running time	0.0s (h)～6500.0s (h)	0.1s(h)	0.0s(h)	○
F10.33	Simple PLC 15th section acceleration and deceleration time selection	0～3	1	0	○
F10.34	Simple PLC runtime unit	0: s (Second) 1: h (Hour)	1	0	○
F10.35	Multi-segment instruction 0 given mode	0: Function code F10.36 given 1: AI1 2: AI2 3: reserve 4: High-speed Pulse 5: PID 6: Preset frequency (F01.01) is given, UP/DOWN can be modified	1	0	○
F10.36	Multi-segment instruction 0	-100.0%～100.0%	0.1%	0.0%	○
F10.37	Multi-segment instruction 1	-100.0%～100.0%	0.1%	0.0%	○
F10.38	Multi-segment instruction 2	-100.0%～100.0%	0.1%	0.0%	○
F10.39	Multi-segment instruction 3	-100.0%～100.0%	0.1%	0.0%	○
F10.40	Multi-segment instruction 4	-100.0%～100.0%	0.1%	0.0%	○
F10.41	Multi-segment instruction 5	-100.0%～100.0%	0.1%	0.0%	○
F10.42	Multi-segment instruction 6	-100.0%～100.0%	0.1%	0.0%	○
F10.43	Multi-segment instruction 7	-100.0%～100.0%	0.1%	0.0%	○
F10.44	Multi-segment instruction 8	-100.0%～100.0%	0.1%	0.0%	○
F10.45	Multi-segment instruction 9	-100.0%～100.0%	0.1%	0.0%	○
F10.46	Multi-segment instruction 10	-100.0%～100.0%	0.1%	0.0%	○
F10.47	Multi-segment instruction 11	-100.0%～100.0%	0.1%	0.0%	○
F10.48	Multi-segment instruction 12	-100.0%～100.0%	0.1%	0.0%	○
F10.49	Multi-segment instruction 13	-100.0%～100.0%	0.1%	0.0%	○
F10.50	Multi-segment instruction 14	-100.0%～100.0%	0.1%	0.0%	○
F10.51	Multi-segment instruction 15	-100.0%～100.0%	0.1%	0.0%	○

F11-Closed loop PID operation function parameter group					
Function code	**Name**	**Set range**	**Min. unit**	**Factory default**	**Modification**
F11.00	Reserve				
F11.01	PID given source	0: F11.02 set 1: AI1 2: AI2 3: Reserve 4: Pulse setting（X8） 5: Communication given 6: Multi-segment instruction	1	0	○
F11.02	PID value given	0.0%～100.0%	0.1%	50.0%	○
F11.03	PID feedback source	0: AI1 1: AI2 2: Reserve 3: AI1-AI2 4: Pulse setting（X8） 5: Communication given 6: AI1+AI2 7: MAX (|AI1|, |AI2|) 8: MIN (|AI1|, |AI2|)	1	0	○
F11.04	PID action direction	0: Positive action 1: Counteraction	1	0	○
F11.05	PID given feedback range	0～65535	1	1000	○
F11.06	Proportional gain KP1	0.0～1000.0	0.1	20.0	○
F11.07	Integration time TI1	0.01s～10.00s	0.01s	2.00s	○
F11.08	Derivative time TD1	0.000s～10.000s	0.001s	0.000s	○
F11.09	PID reverse cutoff frequency	0.00～max. frequency	0.01Hz	2.00Hz	×
F11.10	PID deviation limit	0.0%～100.0%	0.1%	0.0%	○
F11.11	PID differential limiting	0.00%～100.00%	0.01%	0.10%	○
F11.12	PID given change time	0.00～650.00s	0.01s	0.00s	○
F11.13	PID feedback filter time	0.00～60.00s	0.01s	0.00s	○
F11.14	PID output filtering time	0.00～60.00s	0.01s	0.00s	○
F11.15	Proportional gain KP2	0.0～1000.0	0.1	20.0	○
F11.16	Integration time TI2	0.01s～10.00s	0.01s	2.00s	○
F11.17	Derivative time TD2	0.000s～10.000s	0.001s	0.000s	○
F11.18	PID parameter switching condition	0: Do not switch 1: Switching via the X terminal 2: Automatic switching according to deviation	1	0	○
F11.19	PID parameter switching deviation 1	0.0%～F11.20	0.1%	20.0%	○
F11.20	PID parameter switching deviation 2	F11.19～100.0%	0.1%	80.0%	○
F11.21	PID initial value	0.0%～100.0%	0.1%	0.0%	○
F11.22	PID initial value hold time	0.00～650.00s	0.01s	0.00s	○
F11.23	PID integral attribute	Units digit: Integral separation 0: Invalid	01	00	○

		1: Valid Tens digit: Whether to stop the integration after outputting to the limit 0: Continue to score 1: Stop credit			
F11.24	PID feedback loss detection value	0.0%: Do not judge feedback loss 0.1%～100.0%	0.1%	0.0%	○
F11.25	PID feedback loss detection time	0.0s～20.0s	0.1s	0.0s	○
F11.26	PID shutdown operation	0: Shutdown does not operate 1: Downtime operation	1	0	○
F11.27 ～ F11.29	Reserved				

F12-Reserved parameter group 1					
Function code	**Name**	**Set range**	**Min. unit**	**Factory default**	**Modification**
F12.00 ～ F12.14	Reserved				

F13 - Traverse/ Fixed Length Control Function Parameter Group					
Function code	**Name**	**Set range**	**Min. unit**	**Factory default**	**Modification**
F13.00	Traverse operating mode	0: Relative to Centre frequency 1: Relative to Max frequency	1	0	○
F13.01	Traverse amplitude	0.0%～100.0%	0.1%	0.0%	○
F13.02	Sudden-Jump frequency amplitude	0.0%～50.0%	0.1%	0.0%	○
F13.03	Traverse cycle	0.0s～3000.0s	0.1s	10.0s	○
F13.04	Traverse triangular wave rising time	0.1%～100.0%	0.1%	50.0%	○
F13.05	Setting length	0m～65535m	1m	1000m	○
F13.06	Actual length	0m～65535m	1m	0m	○
F13.07	Number of pulses for axis per circle	0.1～6553.5	0.1	100.0	○
F13.08	Setting record value	1～65535	1	1000	○
F13.09	Specified record value	1～65535	1	1000	○
F13.10 ～ F13.14	Reserve				

F14-Vector Control Parameter Group					
Function code	**Name**	**Set range**	**Min. unit**	**Factory default**	**Modification**
F14.00	Speed/Torque control selection	0: Speed control 1: Torque control	1	0	×

F14.01	Speed loop high speed proportional gain	1～100	1	30	○
F14.02	Speed loop high speed integral time	0.01s～10.00s	0.01s	1.00s	○
F14.03	Speed loop low speed proportional gain	1～100	1	20	○
F14.04	Speed loop low speed integral time	0.01s～10.00s	0.01s	0.50s	○
F14.05	Switching frequency 1	0.00～F14.06	0.01Hz	5.00Hz	×
F14.06	Switching frequency 2	F14.05～Max frequency	0.01Hz	10.00Hz	×
F14.07	Flux adjust proportional gain	0～60000	1	2000	○
F14.08	Flux adjust integral gain	0～60000	1	1300	○
F14.09	Torque adjust proportional gain	0～60000	1	2000	○
F14.10	Torque adjust integral gain	0～60000	1	1300	○
F14.11	Torque upper limit source of speed control mode (Motor)	0 :Function code F14.12 setting 1 :AI1 2 :AI2 3 :Reserve 4 :Pulse setting 5 :Communication preset 6 :MIN (AI1,AI2) 7 :MAX (AI1,AI2) Item 1～7 full load correspond F14.12	1	0	○
F14.12	Torque upper limit digit setting of speed control mode (Motor)	0.0%～200.0%	0.1%	150.0%	○
F14.13	Torque upper limit source of speed control mode (Generate electricity）	0: Function code F14.14 setting 1: AI1 2: AI2 3: Reserve 4: Pulse setting 5: Communication preset 6: MIN(AI1,AI2) 7: MAX(AI1,AI2) Item 1～7 full load correspond F14.14	1	0	○
F14.14	Torque upper limit digit setting of speed control mode (Generate electricity)	0.0%～200.0%	0.1%	150.0%	○
F14.15	Torque setting source selection of torque control mode	0: Digital setting 1(F14.16) 1: AI1 2: AI2 3: Reserve 4: Pulse setting 5: Communication preset 6: MIN (AI1,AI2) 7: MAX (AI1,AI2) Item 1～7 full load correspond F14.16 digital	1	0	×

		setting			
F14.16	Torque digit setting of torque control mode	-200.0%～200.0%	0.1%	150.00%	○
F14.17	Forward max frequency in torque control mode	0.00Hz～Max frequency	0.01Hz	50.00Hz	○
F14.18	Reverse max frequency in torque control mode	0.00Hz～Max frequency	0.01Hz	50.00Hz	○
F14.19	Torque accelerate time	0.00s～650.00s	0.01s	0.00s	○
F14.20	Torque decelerate time	0.00s～650.00s	0.01s	0.00s	○
F14.21	Compensation gain of vector control	50%～200%	1%	100%	○
F14.22	Smooting time of SVC speed feedback	0.000s～0.100s	0.001s	0.015s	○
F14.23	Low flux integral multiple	2～10	1	2	×
F14.24	Reserve				
F14.25	Speed loop integral parameters	0: Integral separate invalid 1: Integral separate valid	1	0	○
F14.26	Coefficient of automatic adjust harmonic wave in Low flux	10%～500%	1%	100%	○
F14.27 ～ F14.36	Reserve				

F15-Motor Parameter Group					
Function code	**Name**	**Set range**	**Min. unit**	**Factory default**	**Modification**
F15.00	Motor type selection	0: Ordinary asynchronous motor 1: Frequency variable asynchronous motor	1	1	*
F15.01	Motor rated power	0.1KW～1000.0KW	0.1KW	Base on mot	×
F15.02	Motor rated voltage	1V～2000V	1V	Base on mot	×
F15.03	Motor rated current	0.01A～655.35A (Power≤ 55KW) 0.1A～6553.5A (Power ＞55KW)	-	Base on mot	×
F15.04	Motor rated frequency	0.01Hz～Max frequency	0.01Hz	Base on mot	×
F15.05	Motor rated rotational speed	1rpm～65535rpm	1rpm	Base on mot	×
F15.06	Asynchronous motor stator resistance	0.001Ω～65.535Ω (Power≤ 55kW） 0.0001Ω～6.5535Ω (Power＞55kW）	-	Harmonic wave adjustment parameters	×
F15.07		0.001Ω～65.535Ω (Power≤ 55kW） 0.0001Ω～6.5535Ω (Power＞55kW）	-	Harmonic wave adjustment parameters	×
F15.08	Asynchronous motor rotor resistance	0.01mH～655.35mH (Power≤ 55kW) 0.001mH～65.535mH (Power＞55kW)	-	Harmonic wave adjustment parameters	×

F15.09		0.1mH～6553.5mH (Power≤ 55kW) 0.01mH～655.35mH (Power＞55kW)	-	Harmonic wave adjustment parameters	×
F15.10	Asynchronous motor leakage inductance	0.01A～F15.03 (Power≤ 55kW) 0.1A～F15.03 (Power＞55kW)	-	Harmonic wave adjustment parameters	×
F15.06 ～ F15.18	Reserve				
F15.19	Harmonic wave adjustment selection	0: No operation 1: Asynchronous motor static operation 2: Asynchronous motor dynamic state operation	1	0	×
F15.20 ～ F15.22	Reserve				

F16-Closed loop encoder parameter group					
Function code	**Name**	**Set range**	**Min. unit**	**Factory default**	**Modification**
F16.00	Reserve				
F16.01	Encoder line number	1～65535	1	1024	×
F16.02	ABZ incremental encoder AB phase sequence	0 :Forward 1: Reverse	1	0	×
F16.03	Encoder type	0: ABZ incremental encoder 1: Reserve 2: Resolver	1	0	×
F16.04	Reserve				
F16.05	Reserve				
F16.06	Resolver pole pairs No.	1～65535	1	1	×
F16.07 ～ F16.13	Reserve				

F17-Reserved Parameter Group 2					
Function code	**Name**	**Set range**	**Min. unit**	**Factory default**	**Modification**
F17.00	Reserve				

F18-Enhance Control Parameter Group					
Function code	**Name**	**Set range**	**Min. unit**	**Factory default**	**Modification**
F18.00	Run command binding main frequency command selection	Units digit: Operation panel binding frequency source selection 0: No binding 1: Digits setting frequency 2: AI1	001	000	×

		3: AI2 4: Reserve 5: Pulse setting (X8) 6: Multiple-speed 7: Simple PLC 8: PID 9: Communication preset Tens digit: Terminal binding frequency source selection Hundreds digit: Communication binding frequency source selection			
F18.01 ～ F18.05	Reserve				
F18.06	Terminal UP/DOWN gradient	0.001Hz/s～65.535Hz/s	0.001 Hz/s	1.00 Hz/s	○
F18.07	Reserve				
F18.08	Droop rate	0.00%～10.00%	0.01%	0.00%	○
F18.09	Setup accumulate power on time	0h～65000h	1h	0h	○
F18.10	Setup accumulate run time	0h～65000h	1h	0h	○
F18.11	Timing function selection	0: Invalid 1: Valid	1	0	×
F18.12	Timing operation time	0.0Min～6500.0Min	0.1Min	0.0Min	×
F18.13	Arrival time	0.0Min～6500.0Min	0.1Min	0.0Min	×
F18.14 ～ F18.16	Reserve				
F18.17	Cooling fan control	0: Fan works while run inverter 1: Keep running 2: Fan smart run on temperature	1	0	○
F18.18	Reserve				
F18.19	Reserve				
F18.20	Reserve				
F18.21	Accumulate power assumption	0～65535 degree	1 degree	-	*
F18.22	Inverter module heat sink temperature	-20℃～120℃	1℃	-	*
F18.23	Reserve				
F18.24	Reserve				

F19-Protective Relevant Function Parameter Group					
Function code	**Name**	**Set range**	**Min. unit**	**Factory default**	**Modification**
F19.00	Reserve				
F19.01	Times of fault self-recovery	0～20	1	0	○
F19.02	Time for fault self-recovery	0.1s～100.0s	0.1s	1.0s	○
F19.03	Motor overload protection selection	0: Forbid 1: Permit	1	1	○

F19.04	Motor overload protection gain	0.20～10.00	0.01	1.00	○
F19.05	Motor overload alarm coefficient	50%～100%	1%	80%	○
F19.06	Reserve				
F19.07	Reserve				
F19.08	Reserve				
F19.09	Output phase loss protection selection	0: Forbid 1: Permit	1	1	○
F19.10	Short circuit to ground protection selection	Unit digit :Short circuit to ground protection selection while power on 0: Invalid 1: Valid Tens digit: Reserve	01	01	○
F19.11	Reserve				
F19.12	Module temperature arrival	0℃～ 100℃	1℃	90℃	○
F19.13	Reserve				
F19.14	Reserve				
F19.15	Reserve				
F19.16	Rapid current-limiting enable	0: Can’t enable 1: Enable	1	1	○
F19.17	Motor run section selection when instant power off	0: Invalid 1: Bus voltage constant control 2: Deceleration and stop	1	0	×
F19.18	Recover voltage when instant power off	80.0%～100.0%	1.0%	90.0%	×
F19.19	The time for voltage recovery when instant power off	0.00s～100.00s	0.01s	0.50s	×
F19.20	The instant power off voltage	60.0%～100.0%	1.0%	80.0%	×
F19.21	Reserve				
F19.22	Reserve				
F19.23	Reserve				
F19.24	Run protection selection	0: No protection 1: Protect	1	0	×
F19.25 ～ F19.30	Reserve				
F19.31	Fault protection action selection 1	Units digit: Motor overload (11) 0: Free halt 1: Stop run as halt mode 2: Continue run Tens digit: Reserve Hundreds digit: Output phase loss (13) Thousands digit: Outside fault (15) Ten thousands digit: Communication error (16)	00001	00000	○
F19.32	Fault protection action selection 2	Units digit: Encoder/PG card error (20) 0: Free halt	00001	00000	○

		Tens digit: Function parameter read error(21) 0: Free halt 1: Stop run as halt mode Hundreds digit: Reserve Thousands digit: Motor over hot (25) Ten thousands digit: Run time arrival (26)			
F19.33	Fault protection action selection 3	Units digit: definite fault by users 1(27) 0: Free halt 1: Stop run as halt mode 2: Continue run Tens digit: Definite fault by users 2(28) 0: Free halt 1: Stop run as halt mode 2: Continue run Hundreds digit: Time to power on(29) 0: Free halt 1: Stop run as halt mode 2: Continue run Thousands digit: Reserve Ten thousands digit: PID feedback loss while running (31) 0: Free halt 1: Stop run as halt mode 2: Continue run	00001	00000	○
F19.34	Fault protection action selection 4	Units digit: Speed bias too much(42) 0: Free halt 1: Stop run as halt mode 2: Continue run Tens digit: Motor over speed(43) Hundreds digit: Original position error(51)	001	000	○
F19.35	Action selection when fault automatic reset	0: No action 1: Action	1	0	○
F19.36	Frequency selection for continue running when fault	0: Run on current frequency 1: Run on setting frequency 2: Run on upper limit frequency 3: Run on lower limit frequency 4: Run on abnormal standby frequency	1	0	○
F19.37	Abnormal standby frequency	0.0%～100.0% (100.0% correspond max frequency F01.08)	0.1%	100.0%	○
F19.38	Reserve				
F19.39	Over speed detection value	0.0%～50.0% (Max frequency)	0.1%	20.0%	○
F19.40	Over speed detection time	0.01s～0.60s	0.01s	0.01s	○
F19.41	Detection value when speed deviation is too large	0.0%～50.0% (Max frequency)	0.1%	20.0%	○
F19.42	Detection time when speed deviation is too large	0.0s: No detection 0.1 s～60.0s	0.1s	5.0s	○
F19.43	Reserve				
F19.44	Reserve				

F20-Reserved Parameter Group 3					
Function code	**Name**	**Set range**	**Min. unit**	**Factory default**	**Modification**
F20.00	Reserve				

F21-Reserved Parameter Group 4					
Function code	**Name**	**Set range**	**Min. unit**	**Factory default**	**Modification**
F21.00	Reserve				

F22-Reserved Parameter Group 5					
Function code	**Name**	**Set range**	**Min. unit**	**Factory default**	**Modification**
F22.00	Reserve				

F23-Reserved Parameter Group 6					
Function code	**Name**	**Set range**	**Min. unit**	**Factory default**	**Modification**
F23.00	Reserve				

F24-Reserved Parameter Group 7					
Function code	**Name**	**Set range**	**Min. unit**	**Factory default**	**Modification**
F24.00	Reserve				

F25-Reserved Parameter Group 8					
Function code	**Name**	**Set range**	**Min. unit**	**Factory default**	**Modification**
F25.00	Reserve				

F26-Fault Record Function Parameter Group					
Function code	**Name**	**Set range**	**Min. unit**	**Factory default**	**Modification**
F26.00	The first fault record	0: No fault 1: Reserve 2: Over current at acceleration 3: Over current at deceleration 4: Over current at constant speed 5: Overvoltage at acceleration 6: Overvoltage at deceleration 7: Overvoltage at constant speed 8: Overvoltage at motor halt 9: Under voltage at run 10: Drive overload protection 11: Motor overload protection 12: Reserve 13: Input phase loss	-	-	*

		14: Module overheat 15: External device fault 16: Communication fault 17: Contactor fault 18: Current detect fault 19: Motor harmonic wave adjustment fault 20: Encoder/PG card fault 21: Parameter read-write error 22: Hardware fault 23: Motor short circuit to earth 24: Reserve 25: Reserve 26: Running time arrival 27: Fault defined by users 1 28: Fault defined by users 2 29:Time for power on arrival 30: Reserve 31: PID feedback lost when running 40:Rapid current limit over time 41: Switch motor while running 42: Speed bias too much 43: Motor over speed 45: Motor over hest 51: Original position error 55: Slave device fault when main follow control			
F26.01	The second fault record	-	-	-	*
F26.02	The third (last) fault records	-	-	-	*
F26.03	The third (last) fault records frequency	-	-	-	*
F26.04	The third (last) fault records current	-	-	-	*
F26.05	The third (last) fault records DC busbar voltage	-	-	-	*
F26.06	The third (last) fault records input terminal situation	-	-	-	*
F26.07	The third (last) fault records output terminal situation	-	-	-	*
F26.08	The third (last) fault records VFD situation	-	-	-	*
F26.09	The third (last) fault records power on time	-	-	-	*
F26.10	The third (last) fault records running time				
F26.11	Reserve				
F26.12	Reserve				
F26.13	The second fault record	-	-	-	*

	frequency				
F26.14	The second fault record current	-	-	-	*
F26.15	The second fault record DC busbar voltage	-	-	-	*
F26.16	The second fault records input terminal situation	-	-	-	*
F26.17	The second fault records output terminal situation	-	-	-	*
F26.18	The second fault records VFD situation	-	-	-	*
F26.19	The second fault records power on time	-	-	-	*
F26.20	The second fault records running time	-	-	-	*
F26.21	Reserve				
F26.22	The first fault record frequency	-	-	-	*
F26.23	The first fault record current	-	-	-	*
F26.24	The first fault record DC busbar voltage	-	-	-	*
F26.25	The first fault records input terminal situation	-	-	-	*
F26.26	The first fault records output terminal situation	-	-	-	*
F26.27	The first fault records VFD situation	-	-	-	*
F26.28	The first fault records power on time	-	-	-	*
F26.29	The first fault records running time	-	-	-	*
F26.30	Reserve				

F27-Password and Manufacturer Function Parameter Group					
Function code	**Name**	**Set range**	**Min. unit**	**Factory default**	**Modification**
F27.00	User password	0～65535	1	00000	○
F27.01	Manufacturer password	0～65535	1	00000	○

F27-Password and Manufacturer Function Parameter Group					
Function code	**Name**	**Set range**	**Min. unit**	**Factory default**	**Modification**
C-00	Display the parameter of F00.01, F00.07 definition				
C-01	Display the parameter of F00.02, F00.08 definition				
C-02	Display the parameter of F00.03, F00.09 definition				

C-03	Display the parameter of F00.04, F00.10 definition				
C-04	Display the parameter of F00.05, F00.11 definition				
C-05	Display the parameter of F00.06, F00.12 definition				

(1) Corresponding relationship of input terminal status as below:

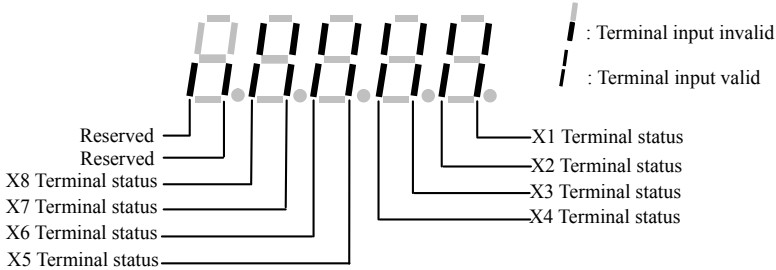

(2) Corresponding relationship of standard output terminal status as below:

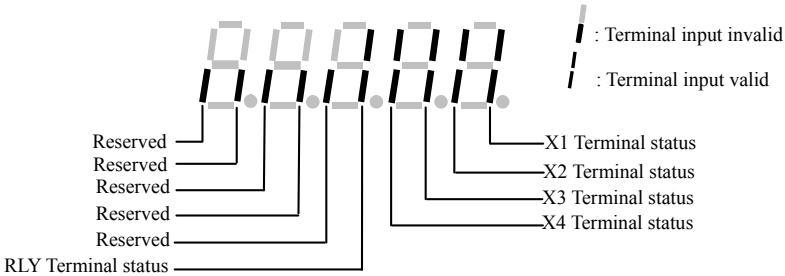

Appendix B Modbus communication protocol

B.1 Summary

We provide general RS485 communication interface in our inverters for the user. Through this communication interface upper device (Such as HMI, PC, PLC controller and etc.) Can perform centralized monitor to the inverter (Such as to set inverter parameter, control run of inverter, read work state of the inverter).

This communication protocol is interface criterion file designed for realizing above-mentioned function, please read it earnestly and program according to it so that realize long-distance and network control to the inverter.

B.2 Communication net buildup mode

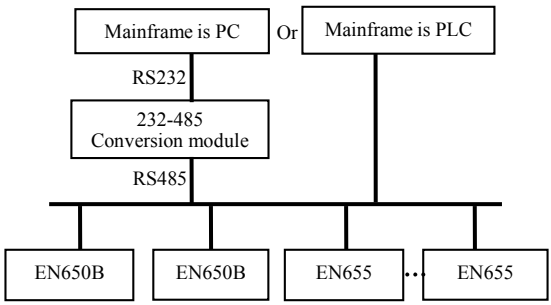

Fig.B-1 Net buildup graph

B.3 Communication mode

At present, EN650B/EN655 inverter can be used only as Slave device in RS485 net. Can realize communication between inverters through PC, PLC or HMI if it's needed. Specific communication mode is as mentioned below:

(1) PC or PLC as mainframe,Inverter as Slave device, Point-to-point communication between mainframe and Slave device.

(2) Slave device don't response when mainframe send out command by broadcast address.

(3) User can set local address, Baud rate and data format of the inverter through Slave device keypad or serial communication mode.

(4) EN650B/EN655 provides the RS485 interface.

(5) Default mode: Asynchronous serial，semiduplex transport mode. There are RTU and ASII two mode. Default format and transport rate: 8-N-2, 9600bps.

B.4 Transmission mode

Asynchronous serial, semiduplex transport mode. Default format and transport rate: 8-N-2, 9600bps. The detail setting parameter, please refer to the F05 group function mode.

(Remark: The parameter is valid under the Modbus communication, the other parameter

comply with the original service manual)

F05.00	Protocol selection	0: Modbus protocol 1: Reserved 2: Reserved	1	0	×
F05.01	Baud rate setting	Units digit: Modbus 0: 300BPS 1: 600BPS 2: 1200BPS 3: 2400BPS 4: 4800BPS 5: 9600BPS 6: 19200BPS 7: 38400BPS 8: 57600BPS 9: 115200BPS Tens: Reserved Hundreds: Reserved Thousands: Reserved	0001	5005	○
F05.02	Modbus Data format	0: No parity（8-N-2） 1: Even parity check（8-E-1） 2: Odd Parity Check（8-O-1） 3: No parity（8-N-1）	1	0	○
F05.03	Local address	0: Broadcast address 1～247	1	1	○

B.5 Data communication structure

B.5.1 Data frame format

Using RTU mode, messages are sent at least 3.5 character time interval pause. The first transmitted field is device address, the character you can transfer is hexadecimal 0x00 ~ 0xFF. Network equipment Continuously monitor the bus, including pauses. When the address field is received, all equipment determine whether it is sent to their own. When the last character of the packet transfer is complete, at least a 3.5 character times pause mean the end of the message. A new message can begin after this pause.

The entire message frame must be transmitted as a continuous flow. If a new message start transmitting in less than 3.5 character times after a message and then receiving device will consider it a continuation of the previous message. This will cause an error, because in the final CRC field value can not be right.

RTU frame format as the table below:

Frame Header	3.5 characters time pause
Slave address	Slave address:0~247
Communication command code	03H: Read slave parameter 06H: Write slave parameter
Data content DATA	The contents of packet: Parameter address(16bit); Number of parameter or bytes of parameter value; Parameter value (16bit)
Data content DATA	
……	
……	
CRC check value low byte	16bit Unsigned check value

CRC check value high byte	
Closing Flag	3.5 characters time pause

Generation method of CRC check value, please refer to Section of verification mode

B.5.2 Host read slave parameter

Command code 03H. Host can read one or more parameter (up to ten) by initiating a communication transaction .

E.g., read 2 contiguous inverter parameter values from the address 0000H of inverter whose address is 01, The contents of host command :

ADR	01H
CMD	03H
Parameters initial address high byte	00H
Parameters initial address low byte	00H
Number of parameter high byte	00H
Number of parameter low byte	02H
CRC check value low byte	C4
CRC check value high byte	0B

The contents of slave reply:

ADR	01H
CMD	03H
Parameter value bytes	04H
Address 0000H content high byte	00H
Address 0000H content low byte	00H
Address 0001H content high byte	00H
Address 0001H content low byte	03H
CRC check value low byte	BA
CRC check value high byte	F2

B.5.3 Host write slave parameter

Command code 06H. Host can write a parameter by initiating a communication transaction.

E.g.,The decimal system 5000 (1388H) written to the inverter 0101H address whose slave address is 02，host command including:

ADR	02H
CMD	06H
Parameter address high byte	01H
Parameter address low byte	01H
Parameter value high byte	13H
Parameter value low byte	88H
CRC check value low byte	D4
CRC check value high byte	93

The contents of slave reply:

ADR	02H
CMD	06H

Parameter address high byte	01H
Parameter address low byte	01H
Address 0101H content high byte	13H
Address 0101H content low byte	88H
CRC check value low byte	D4
CRC check value high byte	93

B.6 Data communication address allocation

B.6.1 Function code F00-F26 group communication address

Inverter function parameter's MODBUS communication address addressing process follows PPnn way: PP means high byte of the address, corresponding to function parameter's group number; nn means low byte of the address, corresponding to function code parameter's group internal code. For example: F3.21 function code's communication address is 0315H, 03H is the hex form of group number 3, 15H is the hex form of group internal code 21.

F00.00 ~ F26.30 communication address is 0000H~1A1EH,(operating on EEPROM) /A000H ~ BA1EH (operating on RAM).

When using MODBUS communication function, the user can choose whether to read or write data in RAM or EEPROM. It is important to note here that power off parameters are not saved when data in RAM is written.

B.6.2 Control command and status word communication address

Variable Name	Communiction address	Reading-writing attribute	Command data or response value meaning
Run command word	2000H	Reading and writing	1: Forward
			2: Reversal
			3: Forward JOG
			4: Reversal JOG
			5: Freely stop
			6: Decelerate stop
			7: Fault reset
			8: Reserve
			9: Reserve
			10: Reserve
Serial port value setting	2001H	Reading and writing	-10000～10000
Inverter status	3000H	Read only	1: Forward running 2: Reversal running 3: Stop
Alarm code	8000H	Read only	0: No alarm 1～60: The current alarm code

Note

When the current mode is speed mode, the serial port set value of 10000 corresponds to the maximum frequency. When the current mode is torque, the serial port set value of 10000 corresponds to the upper limit of digital torque.

B.6.3 Monitor parameter communication address

Variable name	Communication address	Read-write attribute	Command data or response value
Monitoring parameter 0	7000H	Read only	Running frequency
。	。	Read only	。
。	。	Read only	。
。	。	Read only	。
Monitoring parameter item 78	0x704E	Read only	Reserve

B.6.4 Inside hidden parameters

Variable name	Communication address	Read-write attribute	Means of command data or response value
Communication DO given value	2002H	Read-write	BIT0: DO1
			BIT1: DO2
			BIT2: DO3
			BIT3: DO4
			BIT4: REL (Relay)
Communication AO1 given value	2003H	Read-write	0x0000~0x7FFF : 0% - 100%
Communication AO2 given value	2004H	Read-write	0x0000~0x7FFF : 0% - 100%
Communication HDO given value	2005H	Read-write	0x0000~0x7FFF : 0% - 100%

B.7 Communication error processing

Inverter receiving data packet detection error, it finds reading & writing parameter address or parameter value invalid, so reply to the host with communication error response packet. Communication error response packet (host command code +80H) as command code, with 1 byte error code.

Format for communication error response packet as follows:

ADR	01H
CMD	83H/86H
Communication error code	01H～06H (For details, please check below table)
Low byte of CRC checksum	Obtain by calculating
High byte of CRC checksum	Obtain by calculating

Meaning for each communication error code value as follows:

Communication error code value	Communication error type	Priority
0x01	wrong password	1
0x02	Command code illegal	2

0x03	CRC checksum error	3
0x04	invalid address	4
0x05	Invalid parameter	5
0x06	Not allow to modify parameters	6

B.8 Data frames examples

B.8.1 RTU Mode

1、**Start #1 Inverter running**

Data Field	Slave Address	Order code	Register address High byte	Register address Low byte Low byte	Data High byte	Data Low byte	CRC low bit	CRC high bit
Host command frames	01	06	20	00	00	01	43	CA
Slave respond frames	01	06	20	00	00	01	43	CA

2、**Stop #1 Inverter running**

Data Field	Slave Address	Order code	Register address High byte	Register address Low byte Low byte	Data High byte	Data Low byte	CRC low bit	CRC high bit
Host command frames	01	06	20	00	00	06	02	08
Slave respond frames	01	06	20	00	00	06	02	08

3、**Set #1 inverter given value to 50.00Hz**

Data Field	Slave Address	Order code	Register address High byte	Register address Low byte	Data High byte	Data Low byte	CRC low bit	CRC high bit
Host command frames	01	06	20	01	27	10	C9	F6
Slave respond frames	01	06	20	01	27	10	C9	F6

4、Read #1 inverter running state

Data Field	Slave Address	Order code	Register address High byte	Register address Low byte	Data High byte	Data Low byte	CRC low bit	CRC high bit
host command frames	01	03	30	00	00	01	8B	0A
Slave respond frames	01	03	(Respond value byte quantity) 02		00	01	79	84

B.9 CRC checkout mode

CRC checkout value calculating function written by C language is as follows:

```
unsigned int cal_crc_value (unsigned char *pval, unsigned char len)
{
  unsigned int crc_value=0xFFFF;
  unsigned int i;

  while(len--)
  {
        crc_value ^= *pval++;
        for(i=0; i<8; i++)
        {
              if(crc_value & 0x0001)
              {
                    crc_value >>= 1;
                    crc_value ^= 0xA001;
              }
              else
              {
                    crc_value >>= 1;
              }
        }
  }
  return(crc_value);
}
```

Appendix C Universal encoder expansion card

C.1 Encoder expansion card selection:

Universal encoder expansion card (PG card), as an option, is the required selection for frequency inverter to do closed loop vector control.

Serial No.	Type	Description	Remark
1	EN-PG01	Differential input PG card, encoder input signal is not isolated (applicable for the whole series of machines)	Optional
2	EN-PG02	Differential input PG card, encoder input signal through optical coupler isolation, stronger anti-interference ability (applicable for the whole series of machines)	Optional
3	EN-PG03	OC input PG card, encoder input signal through the optocoupler isolation.	Optional
4	EN-PG04	Rotary transformer PG card, only 18.5KW and above power section.	Optional

C.2 EN-PG01、EN-PG02 Shape and terminal definition

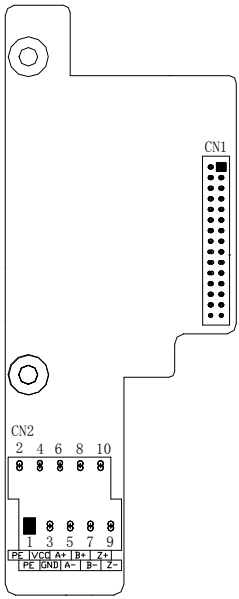

Fig.B-1 EN-PG01、EN-PG02 outline dimensional drawing

Table B-1 Terminal function description

Terminal number	Name	Description	Remark
CN1	Board level docking port	Connect this plug to CN2 on the main control board during installation	
CN2	user interface	for connect with encoder	

(1) CN2 Terminal definition

Foot position	Terminal label	Description
1	PE	Shielding terminal
2	PE	Shielding terminal
3	GND	Power ground (GND of EN-PG01 is connected to the GND of the control board, And GND of EN-PG02 is isolated from the GND of the control board)
4	VCC	supply 5V/300mA current
5	A-	Encoder output A signal negative
6	A+	Encoder output A signal positive
7	B-	Encoder output B signal negative
8	B+	Encoder output B signal positive
9	Z-	Encoder output Z signal negative
10	Z+	Encoder output Z signal positive

(2) PG card specifications:

User interface	Terminal Block
Interval	3.81mm
Maximum rate	500kHz
Differential input signal amplitude	≤7V

C.3 EN-PG03 Differential input signal amplitude

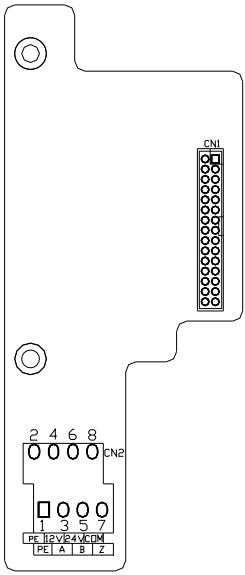

Fig.B-2 EN-PG03 outline dimensional drawing

Table B-2 Terminal function description

Terminal bit number	Name	Description	Remark
CN1	Board level docking port	Connect this plug to CN2 on the main control board during installation	
CN2	User interface	for connect with encoder	

(1) CN2 Terminal definition

Foot position	Terminal label	Description
1	PE	Shielding terminal
2	PE	Shielding terminal
3	A	The encoder outputs A signal
4	12V	Supply 12V voltage (only supply 12V encoder power)
5	B	Encoder outputs B signal
6	24V	supply of 24V/100mA current
7	Z	Encoder outputs Z signal
8	COM	Power Ground

C.4 EN-PG04 Shape and terminal definition

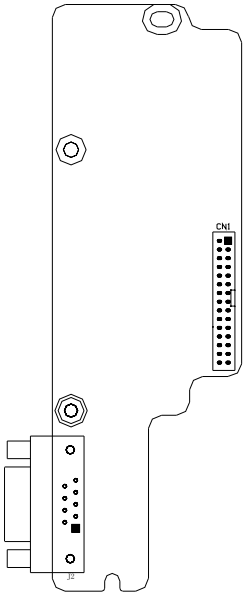

Fig.B-3 EN-PG04 outline dimensional drawing

Table B-3 Terminal function description

Terminal bit number	Name	Description	Remark
CN1	Board level docking port	Connect this plug to CN2 on the main control board during installation	
J2	User interface (DP9 D type connector)	For connect with encoder	

(1) J2 Terminal definition

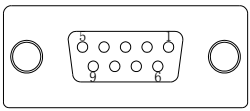

Foot position	Definition	Foot position	Definition
1	Rotary transformer excitation negative	5	Rotary transformer feedback COS positive
2	Rotary transformer excitation positive	6～8	Vacancy
3	Rotary transformer feedback SIN positive	9	Rotary transformer feedback COS negative
4	Rotary transformer feedback SIN	-	-

	negative		

（2）PG Card specification：

User interface	DB9 female connector
Wire gauge	>22AWG
Resolution ratio	12 bits
Excitation resolution ratio	10 kHz
VRMS	7V
VP-P	3.15±25%

Appendix D Braking unit and braking resistance

D.1 Braking unit and braking resistance

The motor's electric potential energy will charge inverter's capacitance up reversely if speed of the motor descends too quickly or load of the motor wobbles too quickly while the inverter is running, which will increase the voltage upon power modules suddenly and is easy to make the inverter damaged. The inverter will control it according to load size and performance. You only need to connect external braking resistance to realize timely energy discharge when the braking function is needed. To connect external resistance is a kind of energy consumption braking mode, as all the energy is consumed by the braking resistance.

EN650B-4T0015 ~ EN650B-4T0550 、 EN655-4T0015 ~ EN655-4T0150 has been configured the built-in braking unit.EN655-4T0185 ~ EN655-4T0550 optional built-in brake unit.

When braking function needed, please connect external braking resistance according to below table.

Configuration table of braking unit and braking resistor configuration and external braking resistor

Frequency inverter type	Built-in braking unit	Built-in braking resistor	Add braking resistor	Quantity	Power of braking resistor (50% braking rate)	Power of braking resistor (10% braking rate)
EN650B/EN655-4T0015	Built-in	None	≥300Ω	1PCS	≥1KW	≥250W
EN650B/EN655-4T0022	Built-in	None	≥300Ω	1PCS	≥1KW	≥250W
EN650B/EN655-4T0037	Built-in	None	≥125Ω	1PCS	≥2KW	≥400W
EN650B/EN655-4T0055	Built-in	None	≥80Ω	1PCS	≥3.8KW	≥750W
EN650B/EN655-4T0075	Built-in	None	≥80Ω	1PCS	≥3.8KW	≥750W
EN650B/EN655-4T0110	Built-in	None	≥50Ω	1PCS	≥5KW	≥1KW
EN650B/EN655-4T0150	Built-in	None	≥40Ω	1PCS	≥7.5KW	≥1.5KW
EN650B-4T0185	Built-in	None	≥27Ω	1PCS	≥9KW	≥1.8KW
EN650B-4T0220	Built-in	None	≥22Ω	1PCS	≥11KW	≥2.2KW
EN650B-4T0300	Built-in	None	≥19Ω	1PCS	≥15KW	≥3KW
EN650B-4T0370	Built-in	None	≥16.8Ω	1PCS	≥18.5KW	≥3.7KW
EN650B-4T0450	Built-in	None	≥13Ω	1PCS	≥22KW	≥4.5KW
EN650B-4T0550	Built-in	None	≥11Ω	1PCS	≥28KW	≥5.5KW
EN655-4T0185	Built-in optional	None	≥27Ω	1PCS	≥9KW	≥1.8KW
EN655-4T0220	Built-in optional	None	≥22Ω	1PCS	≥11KW	≥2.2KW
EN655-4T0300	Built-in optional	None	≥19Ω	1PCS	≥15KW	≥3KW
EN655-4T0370	Built-in optional	None	≥16.8Ω	1PCS	≥18.5KW	≥3.7KW
EN655-4T0450	Built-in optional	None	≥13Ω	1PCS	≥22KW	≥4.5KW
EN655-4T0550	Built-in optional	None	≥11Ω	1PCS	≥28KW	≥5.5KW

ENC Shenzhen Encom Electric Technologies CO., LTD.
Address: 5F, Bldg.4, Minqi Technology Park, Lishan Rd.,
Nanshan Area, Shenzhen 518055, China
Website: www.encvfd.com
E-mail: encvfd@encvfd.com
encvfd@enc.net.cn
Tel: +86-755-26984485
Fax: +86-755-26985120